FLENDER COUPLINGS

N-EUPEX / N-EUPEX DS

Assembly and operating instructions M3100-01en
Version 06/2026

A, B, ADS, BDS



flender.com

FLENDER

Original assembly and operating instructions

M3100-01
Version 06/2026

81064793685743883-V10
TU-
09/07/2026
08:30:07

Copyright (©2026 Flender GmbH)

Table of contents

1 Introduction 11

1.1 Legal information 11

1.2 About these instructions 12

1.3 Text attributes 13

1.4 Copyright 13

2 Safety instructions 15

2.1 General information 15

2.2 Intended use 17

2.3 Safety instructions for a coupling for use in potentially explosive atmospheres 18

2.3.1 Marking 18

2.3.2 Conditions of use 18

2.4 General warning notices 20

3 Description 23

4 Application planning 25

4.1 Transport of the coupling 25

4.2 Storage of the coupling 25

5 Assembly 27

5.1 Preparatory work 27

5.1.1 Milling the finished bore 28

5.1.2 Milling the parallel keyway 29

5.1.3 Machining an axial locking mechanism 30

5.1.4 Balancing the coupling 32

5.2 Assembling the coupling 34

5.3 Aligning the coupling 35

5.3.1 Purpose of alignment 35

5.3.2 Possible misalignment 36

5.3.2.1 Axial misalignment 36

5.3.2.2 Angular misalignment 36

5.3.2.3 Radial misalignment 36

6 Commissioning 37

7 Operation 39

7.1 Normal operation of the coupling ... 39
7.2 Faults - causes and rectification ... 39
7.2.1 Procedure in the event of malfunctions ... 39
7.2.2 Identifying the fault cause ... 40
7.2.2.1 Possible faults ... 41
7.2.2.2 Possible causes ... 42
7.2.2.2.1 Unsuitable coupling ... 42
7.2.2.2.2 Assembly-related causes ... 42
7.2.2.2.3 Maintenance-related causes ... 42
7.2.2.2.4 Specific installation-related and maintenance-related causes ... 43
7.2.3 Correcting faults ... 43
7.2.3.1 Replacing wearing parts ... 43
7.2.3.2 Correcting the changed alignment ... 43

8 Servicing ... 45
8.1 Maintenance intervals ... 45
8.2 Maximum permissible torsional backlash ... 46
8.3 Replacing wearing parts ... 47
8.4 Removing the coupling ... 48

9 Service and support ... 49
9.1 Contact ... 49

10 Disposal ... 51

11 Spare parts ... 53
11.1 Ordering spare parts ... 53
11.2 Spare parts drawing and spare parts list ... 54
11.2.1 Types A and ADS ... 54
11.2.2 Types B and BDS ... 55

A Technical data ... 57
A.1 Speeds, geometry data and weights ... 57
A.1.1 Type A ... 58
A.1.2 Type B ... 60
A.1.3 Type ADS ... 61
A.1.4 Type BDS ... 62
A.2 Shaft misalignment values during operation ... 63
A.3 Tightening torques and widths A/F ... 64
A.4 Tightening procedure ... 65

A.5 Flexible elements (12) 65
A.5.1 Use and storage of flexible elements (12) 65
A.5.2 N-EUPEX flexible elements (12) 66
A.5.3 N-EUPEX DS flexible elements (12) 67

B Declaration of Conformity 69

B.1 EU Declaration of Conformity 69

List of tables

Table 2-1 General warnings 15

Table 2-2 Temperature classes (X) for explosive atmospheres as a result of gases, vapours or mists 19

Table 2-3 Maximum surface temperature (X) for a potentially explosive atmosphere as a result of dust/air mixtures 19

Table 4-1 Types of preservative agents for long-term storage 26

Table 5-1 Recommended assigned fits for bores with parallel key connection 28

Table 5-2 Position of the parallel keyway 29

Table 5-3 Diameter and axial position of the threaded hole 30

Table 5-4 Position of the threaded hole with respect to the parallel keyway 31

Table 5-5 Tightening torques T_A for set screws 32

Table 7-1 Table of faults 41

Table 8-1 Maintenance intervals 45

Table 8-2 Maximum permissible torsional backlash for the types A and B (sizes 58 to 250) 46

Table 8-3 Maximum permissible torsional backlash for the types A and B (sizes 280 to 710) 46

Table 8-4 Maximum permissible torsional backlash for the types ADS and BDS (sizes 66 to 218) 46

Table 8-5 Maximum permissible torsional backlash for the types ADS and BDS (sizes 245 to 556) 46

Table 11-1 Spare parts list for types A and ADS 54

Table 11-2 Spare parts list for types B and BDS 55

Table A-1 Speeds, geometry data and weights of type A 58

Table A-2 Speeds, geometry data and weights of type B 60

Table A-3 Speed, geometry data and weights for ADS type 61

Table A-4 Speed, geometry data and weights for BDS type 62

Table A-5 Maximum permissible shaft misalignment values during operation 63

Table A-6 Tightening torques for part 13 of types A and ADS 64

Table A-7 Tightening procedure 65

Table A-8 N-EUPEX flexible elements 66

Table A-9 N-EUPEX DS flexible elements 67

List of figures

Figure 3-1 Type A and ADS 24
Figure 3-2 Type B and BDS 24
Figure 4-1 Transport symbols 25
Figure 5-1 Tolerances for finished bore 29
Figure 5-2 Diameter and axial position of the threaded hole in the hub 30
Figure 5-3 Position of the balancing bore for single-plane balancing 33
Figure 5-4 Position of the balancing bore for two-plane balancing 33
Figure 5-5 Possible misalignment 36
Figure 8-1 Markings for calculating the torsional backlash 46
Figure 8-2 Jacking threaded hole for loosening coupling part 3 (3) 47
Figure 11-1 Spare parts drawing for types A and ADS 54
Figure 11-2 Spare parts drawing for types B and BDS 55
Figure A-1 Type A 58
Figure A-2 Type B 60
Figure A-3 Type ADS 61
Figure A-4 Type BDS 62

Introduction 1

1.1 Legal information

Warning system

These instructions contain information you must observe for your own personal safety as well as to avoid damage to property and persons. The information regarding your personal safety is highlighted with a warning triangle. Information exclusively regarding property damage alone is not marked with a warning triangle. Depending on the hazard class, the warnings shall be depicted as follows, in descending order.

⚠ DANGER

means that death or severe physical injury **will** occur if the relevant precautionary measures are not taken.

⚠ WARNING

means that death or severe physical injury **may** occur if the relevant precautionary measures are not taken.

⚠ CAUTION

means that mild physical injury may occur if the relevant precautionary measures are not taken.

NOTE

means that damage to property may occur if the relevant precautionary measures are not taken.

If multiple hazard classes come into play, the warning for the highest level in question shall always be used. If a warning containing the warning triangle warns of harm to individuals, the same warning may also include a warning regarding damage to property.

Information



Information

Information offers additional notes, assistance and tips for handling the product.

Qualified personnel

The product/system associated with this documentation may only be used by **qualified personnel** trained to perform the relevant tasks, taking into account the associated documentation for the relevant tasks, particularly the safety information and warnings included therein. Due to their qualification and experience, qualified personnel are capable of detecting risks and avoiding potential hazards when dealing with these products/systems.

Intended use of Flender products

Please note the following:

⚠ WARNING

Flender products are only suitable for the uses set out in the catalogue and associated technical documentation. If third-party products and components are used, these must be recommended and/or authorised by Flender. Safe and flawless operation of the products requires proper transport, proper storage, setup, assembly, installation, commissioning, operation and maintenance. The permissible environmental conditions must be adhered to. Instructions in the associated documentation must be followed.

Trademarks

All designations marked with the trademark symbol ® are registered trademarks of Flender GmbH. Other designations in this document may be trademarks whose use by third parties for their own purposes may violate the rights of the owner.

Liability disclaimer

We have assessed the contents of these instructions for compliance with the hardware and software described. However, deviations cannot be ruled out, so we are unable to accept liability for full compliance. The details in these instructions are regularly reviewed and necessary corrections are contained in subsequent editions.

1.2 About these instructions

These instructions describe the coupling and provide information about its handling – from assembly to maintenance. Keep these instructions for later use.

Read these instructions prior to handling the coupling. The instructions should be observed.

1.3 Text attributes

In addition to the warnings that you must observe for safety reasons, you will find the following text features in these instructions:

1. Procedural instructions are shown as a numbered list. Always perform the steps in the order given.

- Lists are formatted as bulleted lists.
  - The dash is used for lists at the second level.

(1) Numbers in brackets are part numbers.

1.4 Copyright

The copyright for these instructions is held by Flender.

These instructions must not be used wholly or in parts without our authorisation or be given to third parties.

If you have any technical queries, please contact our factory or one of our service outlets (refer to Service and support (Page 49)).

Safety instructions

2

2.1 General information

Instructions

These instructions include all of the important information necessary for using this product safely. Ensure that the valid operating instructions are available for all work on the coupling. The currently valid operating instructions are available for download on the website of Flender GmbH (http://www.flender.com/). Earlier versions of the operating instructions are available upon request.

Please make sure that every person who is commissioned to work on the coupling has read and understood these instructions prior to handling the coupling and observes all of the points.

Only the knowledge of these instructions can avoid faults on the coupling and ensure fault-free and safe operation. Non-adherence to the instructions can cause product or property damage and/or personal injury. Flender does not accept any liability for damage or operating failures that are due to non-adherence to these instructions.

These instructions apply to couplings that can be used in potentially explosive atmospheres as well as in atmospheres that are not potentially explosive.
If you use the coupling in potentially explosive atmospheres, the coupling must have a corresponding marking. The declaration of conformity in the annex only applies to these couplings.

State of the art

The coupling described here has been designed in consideration of the latest findings for demanding technical requirements. This coupling is state-of-the-art at the time of printing these instructions.

In the interest of further development, Flender reserves the right to make such changes to the individual assembly units and accessories that increase performance and safety while maintaining the essential features.

Symbols

ISO	ANSI	Warning
		Warning – hazardous electrical voltage
		Warning – explosive substances
	---	Warning – entanglement hazard

ISO	ANSI	Warning
	---	Warning – hot surfaces
	---	Warning – corrosive substances
	---	Warning – suspended load
	---	Warning – hand injuries
		Explosion protection approval

Table 2-1 : General warnings

Explanation regarding Machinery Directive 2006/42/EC

The couplings described here are “components” in accordance with the Machinery Directive and do not require a Declaration of Incorporation.

Explosion Protection Directive

The term “Explosion Protection Directive” used in these instructions refers to the harmonization legislation of the European Union relating to equipment and protective systems intended for use in potentially explosive atmospheres complied with in accordance with the co-applicable EU Declaration of Conformity.

Protective clothing

In addition to the generally prescribed personal protective equipment (safety shoes, overalls, helmet, etc.), also wear suitable protective gloves and safety glasses when handling the coupling.

Using the coupling

The relevant occupational safety and environmental protection regulations must be complied with at all times during transport, assembly, installation, dismantling, operation and maintenance of the coupling.

Only qualified personnel may operate, assemble, maintain and repair the coupling. Information about qualified personnel can be found in the legal notes at the beginning of these instructions.

If hoisting gear or load lifting devices are used for transporting, these have to be suitable for the weight of the coupling.

If the coupling has visible damage, it may not be assembled or put into operation.

The coupling may only be operated in a suitable housing or with touch protection according to applicable standards. This also applies to test runs and rotational direction checks.

Work on the coupling

Only carry out work on the coupling when it is not in operation and is not under load.

Ensure that the drive aggregate cannot be inadvertently switched on. Attach an information notice to the start switch stating clearly that work is being carried out on the coupling. Ensure that the entire unit is not under load.

2.2 Intended use

Only use the coupling according to the conditions specified in the service and delivery contract and the technical data in the annex. Deviating operating conditions are considered improper use. The user or operator of the machine or system is solely liable for any resulting damage.

When using the coupling please specifically observe the following:

- Do not make any modifications to the coupling that go beyond the permissible machining described in these instructions. This also applies to touch protection equipment.
- Use only original replacement parts from Flender. Flender only accepts liability for original replacement parts from Flender.
  Other spare parts are not tested and approved by Flender. Non-approved replacement parts may possibly change the design characteristics of the coupling and thus impact active and/or passive safety.
  Flender will accept no liability or warranty whatsoever for damage occurring as a result of the use of non-approved spare parts. The same applies to any accessories that were not supplied by Flender.

If you have any queries, please contact our Customer Service (see Service and support (Page 49)).

2.3 Safety instructions for a coupling for use in potentially explosive atmospheres

Information

Declaration of conformity

A declaration of conformity required according to the corresponding Explosion Protection Directive can be found in Chapter Declaration of Conformity (Page 69).

2.3.1 Marking

You can find a description of the coupling parts in Chapter Description (Page 23).

A coupling designed in accordance with the Explosion Protection Directive has a marking on the coupling parts.

Maximum marking

The maximum marking according to the Explosion Protection Directive appears as shown below:

without electrically insulating flexible elements:

Flender GmbH	CE	II 2G Ex h IIC T6 ... T4 Gb X
D 46393 Bocholt		II 2D Ex h IIIC T85 °C ... 110 °C Db X
N-EUPEX	<Year of manufacture>	I M2 Ex h Mb X

with electrically insulating flexible elements:

Flender GmbH	CE	II 2G Ex h IIB T6 ... T4 Gb X
D 46393 Bocholt		II 2D Ex h IIIC T85 °C ... 110 °C Db X
N-EUPEX	<Year of manufacture>	I M2 Ex h Mb X

Reduced marking

A reduced marking may be affixed due to structural conditions. The reduced marking is representative of the maximum markings listed above.

2.3.2 Conditions of use

Note also the material-dependent permissible ambient temperature of the flexible elements (12) in accordance with Section Flexible elements (12) (Page 65).

A coupling designed in accordance with the Explosion Protection Directive is suitable for the following conditions of use:

- Equipment group I
  - Category M2
- Equipment group II
  - Category 2 and 3
  - Group of substances G, zone 1 and 2
  - Group of substances D, zone 21 and 22
  - Explosion group IIA, IIB and IIC
  - Explosion group IIA and IIB when electrically insulating flexible elements are used

Conditions of use for products with X marking

The maximum ambient temperature stated in the following tables applies to the temperature in the direct vicinity of the coupling and the temperature of adjacent components.

1. Gases, vapours or mists

Check the ambient temperature for use of the coupling in the relevant temperature class.

Max. ambient temperature	Temperature class
80 °C	T4
70 °C	T5
55 °C	T6

Table 2-2 : Temperature classes (X) for explosive atmospheres as a result of gases, vapours or mists

2. Dust/air mixtures

Check the ambient temperature.

Max. ambient temperature	Max. surface temperature
80 °C	110 °C

Table 2-3 : Maximum surface temperature (X) for a potentially explosive atmosphere as a result of dust/air mixtures

Notes concerning operation of the coupling in potentially explosive atmospheres

- Only use the coupling underground in mines in potentially explosive atmospheres together with drive motors that can be switched off in the event of the formation of an explosive atmosphere.
- Earth machines that are connected via the coupling with a leakage resistance of less than 10^6 Ω.
- If you want to use a coated coupling in potentially explosive atmospheres, please note the requirements concerning the conductivity of the paint and the limitation on the paint layer thickness applied in accordance with EN 80079-36. No build-up of electrostatic charges is to be expected with a paint layer thickness of less than 200 µm.

2.4 General warning notices



⚠ DANGER

Risk of explosion if not used as intended

The coupling can burst. There is a risk of fatal injury from flying fragments. Personal injury, property damage and fire damage caused by sparks may occur. If a coupling bursts in an area at risk of explosion, then this can result in an explosion.

- Use the coupling for the purpose for which it is intended.



⚠ DANGER

Risk of explosion when using coupling parts without Ex marking

Coupling parts without Ex marking have not been approved for use in potentially explosive atmospheres. These coupling parts can lead to an explosion during operation. There is a risk to life.

- Only use couplings with Ex marking in potentially explosive atmospheres.



⚠ DANGER

Risk of explosion due to the use of unsuitable and/or damaged components

The use of unsuitable and/or damaged components can lead to an explosion in potentially explosive atmospheres. There is a risk to life.

- Observe the information regarding conditions of use.



⚠ DANGER

Risk of explosion due to improper operation

Improper operation of the coupling can lead to an explosion in potentially explosive atmospheres. There is a risk to life.

- Please observe the notes concerning operation of the coupling in potentially explosive atmospheres.



⚠ DANGER

Risk of explosion from hot coupling parts

Risk of burns on hot surfaces. Hot coupling parts can lead to an explosion in potentially explosive atmospheres. There is a risk to life.

- Wear suitable protective equipment (gloves, safety glasses).
- Make sure that the area is not at risk of explosion.



⚠ WARNING

Risk of chemical burns due to chemical substances

There is a risk of chemical burns when handling aggressive cleaning agents.

- Please observe the manufacturer's information on how to handle cleaning agents and solvents.
- Wear suitable protective equipment (gloves, safety goggles).



⚠ WARNING

Risk of crushing due to falling components

Falling components can cause crushing, serious injury and death. The components can be damaged.

- Secure the components to prevent them from falling
- Only use suitable and technically flawless hoisting gear and load lifting attachments.
- Only use hoisting gear and load lifting attachments with sufficient load-bearing capacity.

Description

3

The N-EUPEX or N-EUPEX DS couplings described here are universally applicable, torsionally flexible, damping pin couplings and are available in various types and sizes. The couplings can be used in accordance with the Explosion Protection Directive in potentially explosive atmospheres if they have a corresponding marking.

Types A and B are fail-safe. Types ADS and BDS have no fail-safe device.

These instructions describe the assembly and operation of an N-EUPEX or N-EUPEX DS coupling arranged horizontally with a shaft-hub connection made by a cylindrical or conical bore with parallel key. Please consult Flender if you want to use a different type of installation.

For wear monitoring, types A and B are available as an “AIQ Detect-ready” version. This version has a magnet installed on the outer diameter of the coupling. To use wear monitoring, you also require the “AIQ Detect” system, which must be ordered separately.

Information

Observe the operating instructions of the AIQ Detect.

Application

N-EUPEX Couplings are designed for use in all kinds of machines.

N-EUPEX DS Couplings are used for applications which require the input and output to be disconnected from one another in the event of destruction of the flexible elements.

Structure

The diagrams show the various types with their constituent parts and their part numbers.

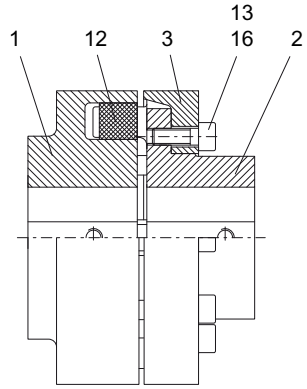

Figure 3-1: Type A and ADS

1 Coupling part 1
2 Coupling part 2
3 Coupling part 3
12 Flexible element
13 Cylinder-head screw
16 Cylindrical pin
only with type A size 440 to 710

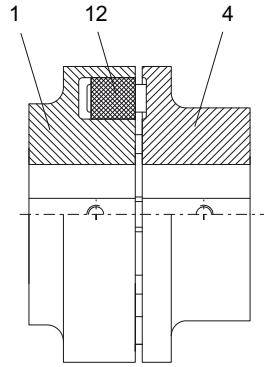

Figure 3-2: Type B and BDS

1 Coupling part 1
4 Coupling part 4
12 Flexible element

Application planning 4

Check the delivery for damage and for completeness. Report any damage and/or missing parts to Flender immediately.

The coupling is delivered in individual parts and preassembled groups. Preassembled groups may not be dismantled.

4.1 Transport of the coupling



⚠ WARNING

Risk of crushing due to improper transport

Falling components can cause crushing, serious injury and death. The components can be damaged.

- Only use suitable and technically flawless hoisting gear and load lifting attachments.
- Only use hoisting gear and load lifting attachments with sufficient load-bearing capacity.
- The symbols on the packaging must be observed.

Unless otherwise agreed contractually, the packaging complies with the HPE Packaging Guidelines.

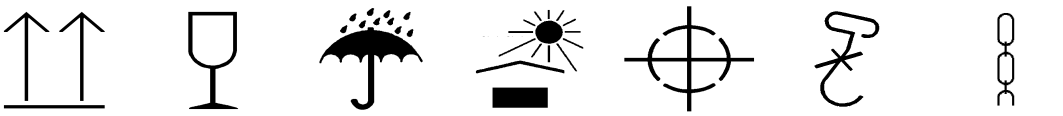

Figure 4-1: Transport symbols

4.2 Storage of the coupling

NOTE

Property damage due to improper storage

Negative changes to the physical properties of the coupling and/or coupling damage.

- Please observe the procedure for storing the coupling.

The coupling, unless specifically ordered otherwise, is supplied with preservation and can be stored for up to 3 months.

Information about storing the coupling

- Ensure that the storage room is dry (relative humidity < 65 %) and free of dust.
- Ensure that there is no condensation.
- Do not store the coupling together with corrosive chemicals, acids, caustic solutions, etc.
- If the coupling contains elastomer components, ensure that there are no devices in the storage room that produce ozone, such as fluorescent lights, mercury vapour lamps or high-voltage electrical equipment.
- Store the coupling on suitable supports or in suitable containers.

Long-term storage

NOTE

Property damage due to improper long-term storage

Negative changes to the physical properties of the coupling and/or coupling damage.

- Carefully observe the specifications for long-term storage.

1. You can find the required type of preservative agent in the following table (types of preservative agents for long-term storage).
2. Remove the elastomer components. These must not come into contact with cleaning agents and long-term preservative agents.
3. Clean the coupling parts.
4. Apply the stipulated preservative agent.
5. Store the coupling parts and the elastomer components separately.

Preservative agent	Features	Indoor storage	Outdoor storage
Oil spray	Corrosion protection	Up to 12 months	Up to 4 months
Tectyl 846 or similar	Long-term preservative agent on wax basis	Up to 36 months	Up to 12 months
Emulsion cleaner + VCI foil	Active system, reusable	Up to 5 years	Up to 5 years

Table 4-1 : Types of preservative agents for long-term storage

Assembly 5

Assembly of the coupling comprises the following steps:

- Preparatory work (Page 27)
- Mounting the coupling (Page 34)
- Aligning the coupling (Page 35)



⚠ DANGER

Risk of explosion if specifications relating to assembly are not adhered to

If you do not observe the information stipulated here regarding assembly, this can lead to bursting of the coupling during operation. There is a risk of fatal injury from flying fragments. If a coupling bursts in an area at risk of explosion, then this can result in an explosion.

- Carefully observe all of the specifications relating to assembly.

Notes for assembling the coupling

- Only use undamaged components when assembling the coupling.
- Follow the assembly sequence.
- Please ensure that there is sufficient space at the assembly location and that the location is tidy and clean in order to be able to assemble and maintain the coupling without any risk.
- If a dimension drawing has been created for the coupling, please observe the information it contains as a matter of priority.

⚠ CAUTION

Cutting hazard due to sharp edges

Sharp edges on the parallel keyway and parallel key groove may cause hand injuries.

- Wear protective gloves.

5.1 Preparatory work

Please consult Flender if you want to machine a conical finished bore.

Carry out the following steps if the coupling does not have a finished bore:

- Milling the finished bore (Page 28)
- Milling the parallel keyway (Page 29)
- Machining an axial locking mechanism (Page 30)
- Balancing the coupling (Page 32)

Information

The customer is responsible for execution of the finishing work on the coupling. Flender shall have no liability whatsoever for claims under warranty arising from finishing work that has not been carried out adequately.

5.1.1 Milling the finished bore

The diameter of the finished bore depends on the shaft used.

Recommended assigned fits

In the following table you can find the recommended assigned fits for bores with a parallel key connection. The assigned fit m6 / H7 is especially suitable for a host of applications.

Description	Push fit		Press fit		Interference fit		
	Not suitable for reversing operation				Suitable for reversing operation		
Shaft tolerance	j6	h6	h6	k6	**m6**	n6	h6
Bore tolerance	H7	J7	K7	H7	**H7**	H7	M7

Table 5-1 : Recommended assigned fits for bores with parallel key connection

Bore diameter



DANGER

Risk of explosion if maximum bore diameter is exceeded

The coupling can burst. There is a risk of fatal injury from flying fragments. In an area at risk of explosion, a burst coupling may result in an explosion.

- Adhere to the maximum bore diameter specified.

The maximum diameters are listed in Section Speeds, geometry data and weights (Page 57)

Procedure

1. Remove the flexible elements (12).
2. Remove the preservation and clean the coupling parts 1 (1) and 2 (2) or 4 (4) to be machined.
3. Clamp the coupling parts to the areas marked with ⌜ in the diagram below.
4. Machine the finished bore in accordance with the diagram below.

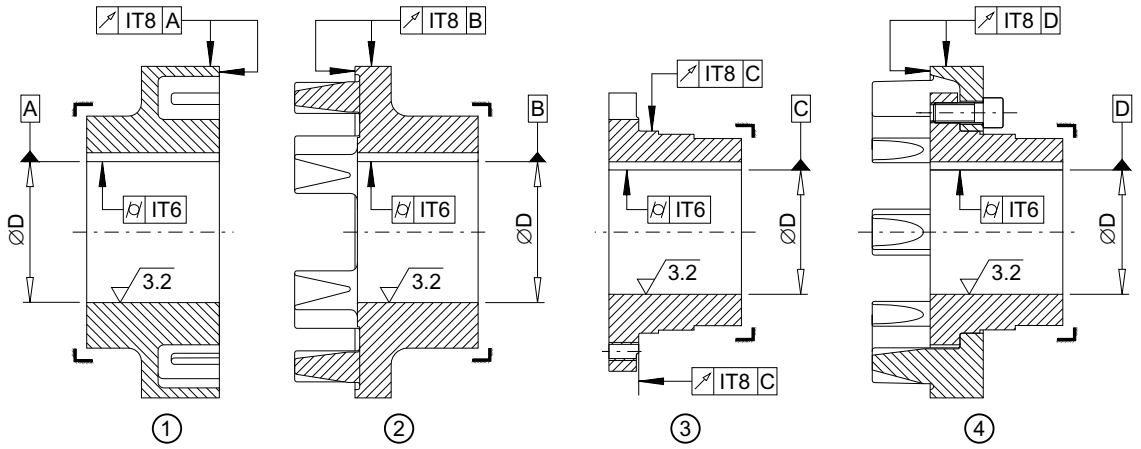

Figure 5-1: Tolerances for finished bore

① Coupling part 1
② Coupling part 4
③ Coupling part 2
④ Coupling part 2/3

5.1.2 Milling the parallel keyway

Position of the parallel keyway

The table below states the required position for the parallel keyway in the coupling parts.

Coupling part	Coupling	Position of the parallel keyway
1	N-EUPEX	Centred between the flexible element webs
1	N-EUPEX DS	Centred between the flexible element pockets
2	N-EUPEX	Centred between the tapped holes
2	N-EUPEX DS	Centred between the tapped holes and offset relative to the recesses for replacement of flexible elements
4	N-EUPEX N-EUPEX DS	Beneath a cam

Table 5-2 : Position of the parallel keyway

Applicable standards

- If the coupling is intended for use under normal operating conditions, mill the parallel keyway according to DIN 6885/1 ISO JS9.
- If the coupling is intended for reversing operation, mill the parallel keyway according to DIN 6885/1 ISO P9.
- If you want to mill a parallel keyway that does not correspond to DIN 6885/1, please consult Flender.

5.1.3 Machining an axial locking mechanism

The coupling part is secured by a set screw or an end plate to prevent axial movements.

Please consult Flender if you want to use an end plate.

Note the following when using a set screw:

- Diameter and axial position of the threaded hole in the hub
- Position of the threaded hole with respect to the parallel keyway
- Selection of the set screw

Diameter and axial position of the threaded hole in the hub

The following figure shows the axial position of the threaded hole.

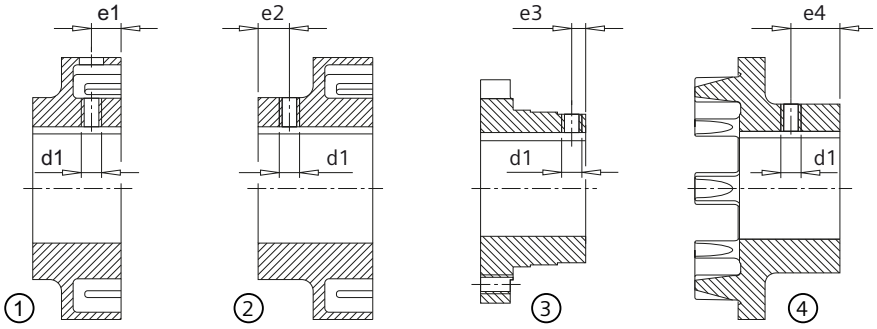

Figure 5-2: Diameter and axial position of the threaded hole in the hub

① Coupling part 1; axial position of the threaded hole up to size 125 / 135
② Coupling part 1; axial position of the threaded hole as of size 140 / 152
③ Coupling part 2
④ Coupling part 4

The following table contains the values for the diameter and axial position of the threaded hole depending on the coupling size.

Size	Assignment d1 to bore D									e1	e2	e3	e4
	≤22	>22 ≤30	>30 ≤38	>38 ≤44	>44 ≤50	>50 ≤58	>58 ≤75	>75 ≤110	>110				
	mm	mm	mm	mm	mm	mm	mm	mm	mm	mm	mm	mm	mm
58 / 66	M5	M5	-	-	-	-	-	-	-	10	-	-	8
68 / 76	M5	M6	-	-	-	-	-	-	-	10	-	-	8
80 / 88	M5	M6	M6	M6	-	-	-	-	-	11	-	-	12
95 / 103	M5	M6	M6	M6	M6	-	-	-	-	15	-	-	15
110 / 118	M5	M6	M6	M6	M6	M6	-	-	-	18	-	6	18
125 / 135	M5	M6	M8	M8	M8	M8	M8	-	-	20	-	10	20
140 / 152	M5	M6	M8	M8	M8	M8	M8	-	-	-	13	10	22
160 / 172	M5	M6	M8	M10	M10	M10	M10	-	-	-	13	14	25
180 / 194	M5	M6	M8	M10	M12	M12	M12	M12	-	-	16	14	32
200 / 218	M5	M6	M8	M10	M12	M12	M12	M12	-	-	20	22	40

Size	Assignment d1 to bore D									e1	e2	e3	e4
	≤22	>22 ≤30	>30 ≤38	>38 ≤44	>44 ≤50	>50 ≤58	>58 ≤75	>75 ≤110	>110				
	mm	mm	mm	mm	mm	mm	mm	mm	mm	mm	mm	mm	mm
225 / 245	M5	M6	M8	M10	M12	M12	M12	M12	-	-	22	16	40
250 / 272	M5	M6	M8	M10	M12	M12	M16	M16	M16	-	24	20	45
280 / 305	-	-	-	-	M12	M12	M16	M16	M16	-	28	30	45
315 / 340	-	-	-	-	M12	M12	M16	M16	M16	-	35	40	-
350 / 380	-	-	-	-	-	M12	M16	M20	M20	-	40	49	-
400 / 430	-	-	-	-	-	M12	M16	M20	M20	-	50	64	-
440 / 472	-	-	-	-	-	M12	M16	M20	M24	-	60	74	-
480 / 514	-	-	-	-	-	-	-	M20	M24	-	70	83	-
520 / 556	-	-	-	-	-	-	-	M20	M24	-	80	100	-
560	-	-	-	-	-	-	-	-	M24	-	75	98	-
610	-	-	-	-	-	-	-	-	M24	-	85	110	-
660	-	-	-	-	-	-	-	-	M24	-	100	122	-
710	-	-	-	-	-	-	-	-	M24	-	115	140	-

Table 5-3 : Diameter and axial position of the threaded hole

Position of the threaded hole with respect to the parallel keyway

The threaded hole for the set screw is generally positioned on the parallel keyway. This does not apply to the coupling parts listed in the following table.

Coupling part	Size	Finished bore [mm]	Position of the threaded hole
1	58 / 66	≥ 15	Offset 180° relative to parallel keyway
	68 / 76	≥ 20	Offset 144° relative to parallel keyway
	80 / 88	≥ 25	Offset 180° relative to parallel keyway
	95 / 103	≥ 43	Offset 180° relative to parallel keyway
2	180/194	≥ 75	Offset 180° relative to parallel keyway
4	58 / 66	≥ 18	Offset 180° relative to parallel keyway
	68 / 76	≥ 20	Offset 180° relative to parallel keyway

Table 5-4 : Position of the threaded hole with respect to the parallel keyway

Tightening torques for set screws

Size of the set screw	Tightening torques T_A Nm
M5	3
M6	4
M8	8
M10	15
M12	25
M16	70
M20	130
M24	230

Table 5-5 : Tightening torques T_A for set screws

Apply the specified tightening torques as listed in Section Tightening procedure (Page 65).

Selection of the set screw

⚠ CAUTION

Risk of injury from protruding set screw

There is a risk of injury if the set screw protrudes out of the hub.

- Please observe the information about selecting the set screw.

Use set screws with hexagon socket and cup point in accordance with ISO 4029. The size of the set screw is determined by the threaded hole made. The set screw should fill out the threaded hole as much as possible and not protrude beyond the hub.

5.1.4 Balancing the coupling

NOTE

Property damage to coupling part 1 (1)

If you completely drill through the base of a flexible element pocket on coupling part 1 (1), then coupling part 1 (1) is no longer allowed to be used for operation.

- Please observe the stipulations about machining the balancing bore.

- Select the balancing quality according to the application (but at least G16 in accordance with DIN ISO 21940).
- Observe the balancing specification according to DIN ISO 21940-32.

- Machine the balancing bore on a large radius with adequate clearance to the flexible element bridges / pockets and to the cams and the outer circumference.
- Carefully deburr the balancing bore.

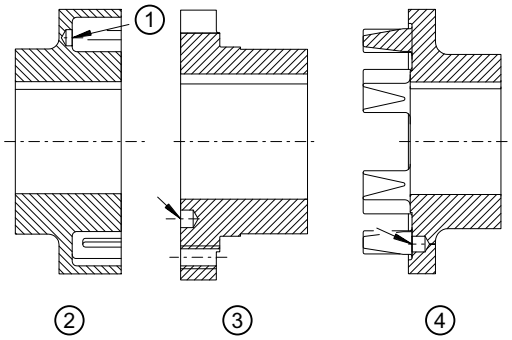

Figure 5-3: Position of the balancing bore for single-plane balancing

① Balancing bore
② Part 1 for N-EUPEX or N-EUPEX DS coupling
③ Part 2 for N-EUPEX or N-EUPEX DS coupling
④ Part 4 for N-EUPEX or N-EUPEX DS coupling

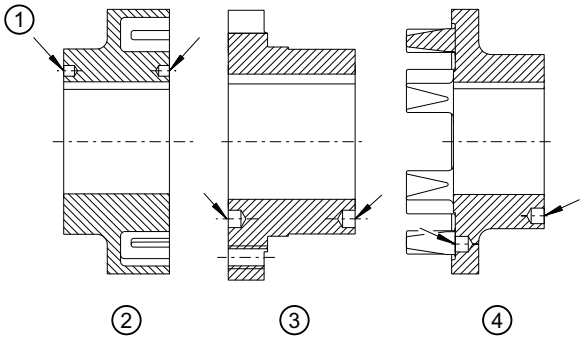

Figure 5-4: Position of the balancing bore for two-plane balancing

① Balancing bore
② Part 1 for N-EUPEX or N-EUPEX DS coupling
③ Part 2 for N-EUPEX or N-EUPEX DS coupling
③ Part 4 for N-EUPEX or N-EUPEX DS coupling

Information

A better balancing result can be achieved by balancing the coupling parts (2 and 3) when they are bolted together as an assembly unit. When total balancing, mark the position of the components relative to one another.

5.2 Assembling the coupling

NOTE

Property damage due to improper handling

Improper handling can damage the shaft ends, coupling and/or parallel keys.

- Ensure that you do not damage the bores with hoisting gear or similar equipment.
- Ensure that the elastomer components do not come into contact with cleaning agents.
- Follow the handling instructions regarding assembling the coupling parts.

Procedure

1. Unscrew the set screw out of coupling parts 1 (1) and 2 (2) or 4 (4) until it is no longer possible for there to be a collision with the parallel key or the shaft.
2. Clean the bores and shaft ends.
3. Coat the bores of coupling parts 1 (1) and 2 (2) or 4 (4) and the shafts with MoS_2 mounting paste (e.g. Microgleit LP 405).
4. If you have dismantled the coupling part 3 (3), mount the coupling part 3 (3) on the shaft before fitting the coupling part 2 (2).
5. Mount the coupling parts 1 (1) and 2 (2) or 4 (4) on the shaft.



⚠ DANGER

Risk of explosion from incorrectly mounted coupling parts with conical bore

If you do not observe the information stipulated here when assembling coupling parts with a conical bore, then this can cause the coupling to burst in operation. There is a risk of fatal injury from flying fragments. If a coupling bursts in a potentially explosive atmosphere, this can result in an explosion.

- Mount the coupling parts with conical bore and parallel keyway on the shaft in the cold condition.
- Secure the coupling parts with suitable end plates without pulling the coupling parts further onto the cone (fitting dimension = 0) or according to the dimension drawing provided.

Information

Coupling parts with cylindrical bore

To make assembly easier, you can heat coupling parts 1 (1) and 2 (2) or 4 (4) with cylindrical bore up to a maximum of 120 °C if required.

- Ensure that the area is not at risk of explosion.
- When doing this, note the temperature range of the flexible elements (12) (see section N-EUPEX flexible elements (12) (Page 66) and N-EUPEX DS flexible elements (12) (Page 67)). Remove the flexible elements (12) if necessary.
- Protect adjacent components against damage and impermissible heating.

6. Secure the coupling parts 1 (1) and 2 (2) or 4 (4) with a set screw or an end plate. When securing with a set screw, the shaft must not protrude or be set back from the inner side of the hub.
7. Tighten up the set screw or the screw to attach the end plate to the specified tightening torque T_A (for the set screw please see section Machining an axial locking mechanism (Page 30)).
8. If you have removed the flexible elements (12), reinstall the flexible elements (12).
9. If you have removed the coupling part 3 (3), apply a small quantity of liquid screw locking agent (e.g. Loctite 243, medium strength) to the screws (13). Insert the screws (13) and screw the coupling part 2 (2) and 3 (3) together hand tight. With type A from size 440 and higher, coupling parts 2 (2) and 3 (3) are also pinned to one another. Re-insert the pins (16). When doing this, carefully observe the marking.
10. Screw on the coupling part 2 (2) and 3 (3) with the specified tightening torque T_A (see section Tightening torques and widths A/F (Page 64)).

5.3 Aligning the coupling

5.3.1 Purpose of alignment

The components that are joined by the coupling (e.g. shafts, flanges) are never on an ideal precise axis but have a certain amount of misalignment.

Misalignment in the coupling leads to restoring forces that can stress adjacent machine parts (e.g. the bearings) to an unacceptable extent.

The misalignment values in operation result from the following:

- Misalignment due to assembly
  Incorrect position due to a lack of precision when aligning
- Misalignment due to operation
  Example: Load-related deformation, thermal expansion

You can minimise misalignment by aligning after assembly. A lower misalignment in the coupling has the following advantages:

- Reduced wear of the elastomer components
- Reduced restoring forces
- Misalignment reserves for operation of the coupling

You can find the maximum permitted shaft misalignment values during operation in Section Shaft misalignment values during operation (Page 63).

5.3.2 Possible misalignment

The following types of misalignment can occur:

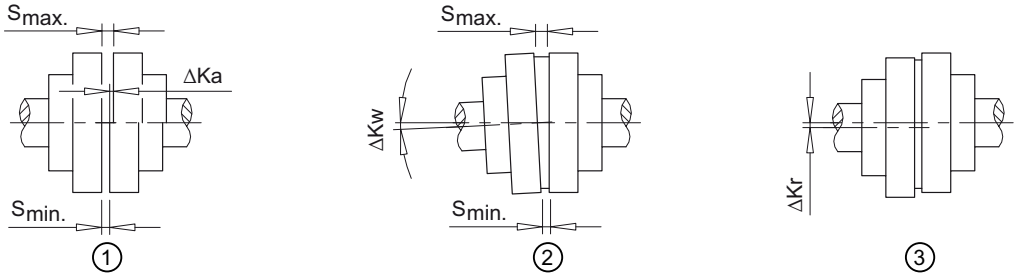

Figure 5-5: Possible misalignment

① Axial misalignment (ΔKa)
② Angular misalignment (ΔKw)
③ Radial misalignment (ΔKr)

5.3.2.1 Axial misalignment

Set the axial misalignment ΔKa to a value within the permissible tolerance range of dimension S.

You can find the values for dimension S in section Speeds, geometry data and weights (Page 57).

5.3.2.2 Angular misalignment

Determine the value ΔS ($\Delta S = S_{max} - S_{min}$). The determined value ΔS may not exceed the value ΔS_{perm}.

You can find the values for ΔS_{perm} in section Shaft misalignment values during operation (Page 63).

If required, you can calculate the angular misalignment ΔKw as follows:

$\Delta Kw\ [rad] = \Delta S / DA$

$\Delta Kw\ [deg] = (\Delta S / DA) \cdot (180 / \pi)$

If required, you can calculate the permissible angular misalignment ΔKw_{perm} as follows:

$\Delta Kw_{perm}\ [rad] = \Delta S_{perm} / DA$

$\Delta Kw_{perm}\ [deg] = (\Delta S_{perm} / DA) \cdot (180 / \pi)$

DA in mm see section Speeds, geometry data and weights (Page 57)

ΔS_{perm} see section Shaft misalignment values during operation (Page 63)

5.3.2.3 Radial misalignment

Determine the value ΔKr. The determined value ΔKr may not exceed the value ΔKr_{perm}.

You can find the permissible radial misalignment ΔKr_{perm} in Section Shaft misalignment values during operation (Page 63).

Commissioning 6



DANGER

Risk of explosion due to ignition of deposits

When used in potentially explosive atmospheres, deposits from heavy metal oxides (rust) can ignite due to friction, impact or friction sparks and lead to an explosion. There is a risk to life.

- Ensure through the use of an enclosure or other suitable measures that heavy metal oxide (rust) deposits on the coupling are not possible.

In order to ensure safe commissioning, carry out various tests prior to commissioning.

Testing before commissioning



DANGER

Risk of explosion due to overload conditions during commissioning

The coupling can burst. There is a risk of fatal injury from flying fragments. If a coupling bursts in an area at risk of explosion, then this can result in an explosion.

- Carry out the tests prior to commissioning.
- Do not touch the rotating coupling.

1. Check the tightening torques of the screws of the coupling in accordance with section Tightening torques and widths A/F (Page 64).
2. Check the tightening torques of the foundation bolts of the coupled machines.
3. Check whether suitable enclosures (ignition protection, coupling guard, touch protection) have been installed and that the function of the coupling has not been adversely affected by the enclosure. This also applies to test runs and rotational direction checks.

Operation 7

7.1 Normal operation of the coupling

The coupling runs quietly and shock-free during normal operation.

7.2 Faults - causes and rectification

A form of behaviour which is different to normal operation is classed as a fault and has to be rectified immediately.

Look out specifically for the following faults during coupling operation:

- Unusual coupling noise
- Sudden occurrence of shocks

7.2.1 Procedure in the event of malfunctions



⚠ DANGER

Risk of explosion if any faults occur

The coupling can burst. There is a risk of fatal injury from flying fragments. Bursting of the coupling can lead to an explosion in potentially explosive atmospheres.

- Switch off the unit at once if any faults occur.
- Note during the repair work the possible causes of faults and the notes on rectifying them.

Proceed as described below if there is a fault of the coupling during operation:

1. Turn the drive off immediately.
2. Initiate the required action for repair taking into consideration the applicable safety regulations.

If you cannot determine the cause or if you cannot carry out repair work with your own means, request one of our Customer Service technicians from one of our Customer Service locations.

7.2.2 Identifying the fault cause

Faults occur frequently due to application errors or they occur due to operational circumstances such as wear of wearing parts or changes to the system.

The faults and fault causes listed below only serve as an indication for troubleshooting. In the case of a complex system be sure to include all the system components in the search for the fault.



⚠ WARNING

Risk of being pulled in by rotating parts

There is a danger of being caught or pulled in by rotating or moving parts and being injured as a result.

- Only carry out work on the coupling when it is at a standstill.
- Secure the drive aggregate against unintentional startup.
- Attach an information notice to the start switch stating clearly that work is being carried out on the coupling.
- Before starting any work, make sure that the unit is free from loads.

Intended use

The coupling is only approved for the applications specified in these instructions. Please observe the specifications in Section Intended use (Page 17).

7.2.2.1 Possible faults

Fault	Cause	Rectification
Sudden changes in the noise level and/ or sudden occurrences of shocks	Wear of wearing parts	Follow the instructions given in section Replacing wearing parts (Page 43).
	Changed alignment	Follow the instructions given in section Correcting the changed alignment (Page 43).
	Coupling not suitable for the operating conditions. Check the possible causes given in section Unsuitable coupling (Page 42).	Use a coupling that is suitable for the operating conditions.
	Incorrect assembly of the coupling. Check the possible causes given in sections Assembly-related causes (Page 42) and Specific installation-related and maintenance-related causes (Page 43).	Reassemble the coupling in accordance with these instructions. Please observe all the stipulations and requirements given in chapter Assembly (Page 27).
	Incorrect maintenance of the coupling. Check the possible causes given in sections Maintenance-related causes (Page 42) and Specific installation-related and maintenance-related causes (Page 43).	Please observe all the stipulations and requirements given in chapter Servicing (Page 45).
Presence of vibration	Coupling not suitable for the operating conditions. Check the possible causes given in section Unsuitable coupling (Page 42).	Use a coupling that is suitable for the operating conditions.
	Incorrect assembly of the coupling. Check the possible causes given in sections Assembly-related causes (Page 42) and Specific installation-related and maintenance-related causes (Page 43).	Reassemble the coupling in accordance with these instructions. Please observe all the stipulations and requirements given in chapter Assembly (Page 27).
	Incorrect maintenance of the coupling. Check the possible causes given in sections Maintenance-related causes (Page 42) and Specific installation-related and maintenance-related causes (Page 43).	Please observe all the stipulations and requirements given in chapter Servicing (Page 45).

Table 7-1 : Table of faults

7.2.2.2 Possible causes

7.2.2.2.1 Unsuitable coupling

- Important information on the description of the drive unit and the environment were not available when the coupling was chosen.
- System torque too high and/or torque dynamics not permissible.
- System speed too high.
- Application factor not selected correctly.
- Chemically aggressive environment not taken into consideration.
- Coupling not suitable for the ambient temperature.
- Diameter and/or assigned fit of the finished bore not permissible.
- Width across corners of the parallel keyways greater than the width across corners of the parallel keyways in accordance with DIN 6885/1 for the maximum permissible bore.
- Shaft-hub connection incorrectly sized.
- Maximum permissible load conditions not taken into consideration.
- Maximum permissible overload conditions not taken into consideration.
- Dynamic load conditions not taken into consideration.
- Coupling and the machine and/or drive train form a critical torsional, axial or bending vibration system.

7.2.2.2.2 Assembly-related causes

- Damaged component installed.
- Shaft diameter outside the stipulated tolerance range.
- Coupling parts interchanged and hence not assigned to the specified shaft.
- Stipulated locking elements to prevent axial movements not installed.
- Stipulated tightening torques not adhered to.
- Bolts inserted dry or greased.
- Flange surfaces of screwed connections not cleaned.
- Alignment and/or shaft misalignment values not set in accordance with the instructions.
- Coupled machines were not correctly connected to the foundation so that a shifting of the machines leads to an impermissible displacement of the coupling parts.
- Coupled machines not earthed adequately.
- Coupling guard used is not suitable.

7.2.2.2.3 Maintenance-related causes

- Stipulated maintenance intervals not adhered to.
- Replacement parts that were used were not original replacement parts from Flender.
- Flender spare parts that were used were old or damaged.
- Leak in the area of the coupling not detected so that chemically aggressive substances damage the coupling.
- Indications of faults, such as noise or vibration, were not heeded.

- Stipulated tightening torques not adhered to.
- Alignment and/or shaft misalignment values not set in accordance with the instructions.

7.2.2.2.4 Specific installation-related and maintenance-related causes

- Flexible elements (12) not fitted.
- Fitted flexible elements (12) heated up excessively when applying heat to the coupling parts.
- Flexible elements (12) of different types or age are used.
- Flexible elements (12) not replaced as sets.

7.2.3 Correcting faults

7.2.3.1 Replacing wearing parts

Flexible elements (12) are subject to wear and this wear can result in torsional backlash.

Procedure

1. Check the wear on the flexible elements (12) (see section Maximum permissible torsional backlash (Page 46)).
2. Replace the flexible elements (12) if necessary (see section Replacing wearing parts (Page 47)).

7.2.3.2 Correcting the changed alignment

A changed alignment of the coupling during operation often occurs when the coupled machines shift towards one another. A cause of this can be loose foundation bolts.

Procedure

1. Correct the cause for the change in alignment.
2. Check the wearing parts for wear and replace them as required.
3. Check the locking elements that prevent axial movements and correct these as required.
4. Realign the coupling.

Servicing 8

8.1 Maintenance intervals



⚠ DANGER

Risk of explosion if maintenance intervals are not adhered to

The coupling can burst. There is a risk of fatal injury from flying fragments. If a coupling bursts in an area at risk of explosion, then this can result in an explosion.

- Please observe all the specifications for coupling maintenance in this section.



⚠ DANGER

Risk of explosion if maximum permitted torsional backlash is exceeded

The coupling can burst. There is a risk of fatal injury from flying fragments. If a coupling bursts in an area at risk of explosion, then this can result in an explosion.

- Note also the actual wear of the elastomer components.



⚠ WARNING

Risk of being pulled in by rotating parts

There is a danger of being caught or pulled in by rotating or moving parts and being injured as a result.

- Only carry out work on the coupling when it is at a standstill.
- Secure the drive aggregate against unintentional startup.
- Attach an information notice to the start switch stating clearly that work is being carried out on the coupling.
- Before starting any work, make sure that the unit is free from loads.

Check the torsional backlash between the coupling parts at the specified maintenance intervals. The maximum permissible torsional backlash for the various coupling sizes can be found in section Maximum permissible torsional backlash (Page 46).

Model	Initial maintenance	Follow-up maintenance
A	3 months after commissioning	Every 12 months
B		
ADS	3 months after commissioning [1)]	Every 12 months [1)]
BDS		

Table 8-1 : Maintenance intervals

[1)] According to the Explosion Protection Directive, need only be inspected if a failure of the flexible elements (12) and shutdown of the drive as a result of this failure could give rise to a risk of explosion. We recommend that the torsional backlash is checked regularly.

Shorter maintenance intervals

If necessary, set shorter maintenance intervals depending on actual wear.

8.2 Maximum permissible torsional backlash

In order to calculate the torsional backlash, rotate one coupling part without applying torque up to the stop. Mark both of the coupling halves in the way shown in the diagram below. Turn the coupling part in the opposite direction up to the stop. The markings on both halves will then move apart. The distance between the markings corresponds to the torsional backlash.

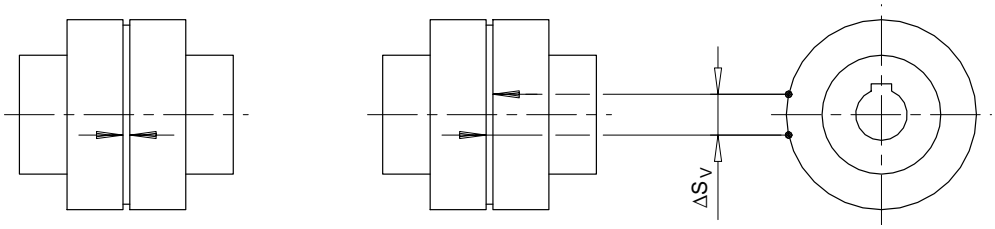

Figure 8-1: Markings for calculating the torsional backlash

Size	58	68	80	95	110	125	140	160	180	200	225	250
Maximum permissible torsional backlash ΔS_V [mm]	5.5	5.5	5.0	6.0	7.0	8.0	8.0	8.0	8.0	8.5	9.0	10.0

Table 8-2 : Maximum permissible torsional backlash for the types A and B (sizes 58 to 250)

Size	280	315	350	400	440	480	520	560	610	660	710
Maximum permissible torsional backlash ΔS_V [mm]	11.5	10.5	11.5	13.0	14.0	15.5	17.5	17.5	19.5	21.0	22.5

Table 8-3 : Maximum permissible torsional backlash for the types A and B (sizes 280 to 710)

Size	66	76	88	103	118	135	152	172	194	218
Maximum permissible torsional backlash ΔS_V [mm]	6.0	7.0	5.0	7.0	9.0	10.5	11.5	9.0	8.0	7.0

Table 8-4 : Maximum permissible torsional backlash for the types ADS and BDS (sizes 66 to 218)

Size	245	272	305	340	380	430	472	514	556
Maximum permissible torsional backlash ΔS_V [mm]	6.5	7.0	8.0	6.5	7.0	10.0	12.0	14.0	16.0

Table 8-5 : Maximum permissible torsional backlash for the types ADS and BDS (sizes 245 to 556)

8.3 Replacing wearing parts



⚠ DANGER

Risk of explosion if stipulations concerning the replacement of wearing parts are not adhered to

If you do not observe the stipulations here concerning the replacement of wearing parts, this can lead to bursting of the coupling during operation. There is a risk of fatal injury from flying fragments. If a coupling bursts in an area at risk of explosion, then this can result in an explosion.

- Please observe all the stipulations concerning the replacement of wearing parts.

Replace the flexible elements (12) if the maximum permissible torsional backlash has been reached. The method used to replace the flexible elements (12) varies according to the coupling type.

Types A and ADS

Replace the flexible elements (12) without moving the coupled machines.

1. Undo the connection between coupling parts 2 (2) and 3 (3).
2. Move the coupling part 3 (3) axially.
   The flexible elements (12) are freely accessible after coupling part 2 (2) has been turned.
   To make it easier to loosen coupling part 3 (3), a jacking threaded hole is machined in coupling part 1 (1) on coupling sizes 225 to 430. As of coupling size 440, the jacking threaded hole is machined in coupling part 3 (3).



Figure 8-2: Jacking threaded hole for loosening coupling part 3 (3)

① Jacking threaded hole in coupling part 1
② Jacking threaded hole in coupling part 3

3. Remove the flexible elements (12).
4. Install the new flexible elements (12).
   Please observe the information in section Use and storage of flexible elements (12) (Page 65) when replacing flexible elements (12).

When reinstalling the coupling parts please observe the information in chapters Assembly (Page 27) and Commissioning (Page 37).

Types B and BDS

1. In order to replace the flexible elements (12), move the coupled machines apart.
2. Remove the flexible elements (12).
3. Install the new flexible elements (12).
   Please observe the information in section Use and storage of flexible elements (12) (Page 65) when replacing flexible elements (12).

When reinstalling the coupling parts please observe the information in chapters Assembly (Page 27) and Commissioning (Page 37).

8.4 Removing the coupling



⚠ DANGER

Risk of explosion from burners and hot coupling parts

Risk of burns due to burners and hot surfaces. Burners or hot coupling parts can lead to an explosion in potentially explosive atmospheres. There is a risk to life.

- Wear suitable protective equipment (gloves, safety glasses).
- Ensure that the area is not at risk of explosion.

Procedure

1. Move the coupled machines apart.
2. Secure the coupling parts to prevent them from falling.
3. Remove the axial locking elements (set screw, end plate).
4. Use a suitable pulling fixture.
5. Heat up the coupling part 1 (1) and 2 (2) or 4 (4) using a burner above the parallel key-way along its length to maximum 80 °C.
   Note the temperature range of the flexible elements (12) when doing this (see Sections N-EUPEX flexible elements (12) (Page 66) and N-EUPEX DS flexible elements (12) (Page 67)). Remove the flexible elements if necessary.
6. Pull off the coupling part. Use suitable lifting gear when doing this.
7. Check the hub bore and the shaft for damage and protect them against corrosion.
8. Replace damaged parts.

When reinstalling the coupling parts, please observe the information in Chapters Assembly (Page 27) and Commissioning (Page 37).

Service and support 9

9.1 Contact

When ordering replacement parts, requesting a customer service technician or if you have any technical queries, contact our factory or one of our Customer Service addresses:

Flender GmbH

Schlavenhorst 100

46395 Bocholt

Germany

Tel.: +49 (0)2871/92-0

Fax.: +49 (0)2871/92-2596

Flender GmbH (http://www.flender.com/)

Further information

You can find further information about service and support online:

Service and support (https://www.flender.com/service)

Disposal

10

Disposal of the coupling

Dispose of the coupling parts according to applicable national regulations or recycle them.

Spare parts 11

11.1 Ordering spare parts

By stocking the most important replacement parts at the installation site you can ensure that the coupling is ready for use at any time.

Use only original replacement parts from Flender. Flender only accepts liability for original replacement parts from Flender.

You can find the available replacement parts for the coupling described here at Spare parts drawing and spare parts list (Page 54).

You can find our contact data for ordering replacement parts at Service and support (Page 49).

Information required when ordering replacement parts

- Flender order number with item
- Flender drawing number
- Coupling type and size
- Part number (refer to Spare parts drawing and spare parts list (Page 54))
- Dimensions of the replacement part, for example:
  - Bore
  - Bore tolerance
  - Parallel keyway and balancing
- Special dimensions, for example, flange connection dimensions, intermediate sleeve length or brake drum dimensions
- Any special properties of the replacement part, such as, for example:
  - Temperature resistance
  - Electrical insulation
  - Operating fluid
  - Use in potentially explosive atmospheres
- Quantity

11.2 Spare parts drawing and spare parts list

11.2.1 Types A and ADS

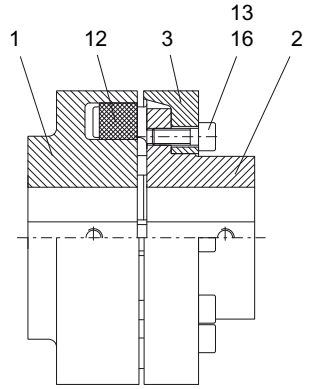

Figure 11-1: Spare parts drawing for types A and ADS

Part number	Designation
1	Coupling part 1
2	Coupling part 2
3	Coupling part 3
12	Flexible element
13	Cylinder-head screw
16	Cylindrical pin only for sizes 440 to 710 of type A

Table 11-1 : Spare parts list for types A and ADS

11.2.2 Types B and BDS

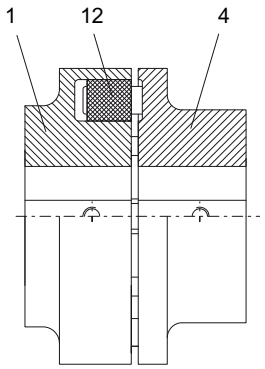

Figure 11-2: Spare parts drawing for types B and BDS

Part number	Designation
1	Coupling part 1
4	Coupling part 4
12	Flexible element

Table 11-2 : Spare parts list for types B and BDS

Technical data

A

A.1 Speeds, geometry data and weights

In this section you can find dimension drawings and technical specifications for N-EUPEX and N-EUPEX DS couplings of the following types:

- Type A (Page 58)
- Type B (Page 60)
- Type ADS (Page 61)
- Type BDS (Page 62)

A.1.1 Type A

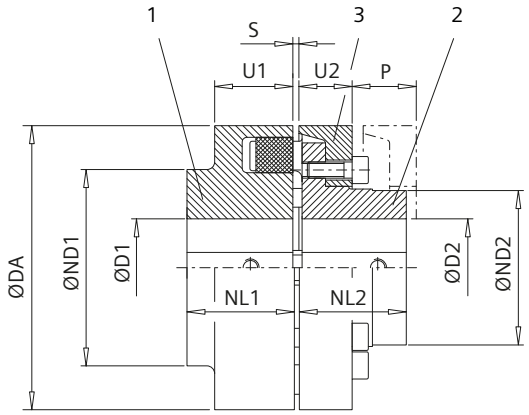

Figure A-1: Type A

1 Coupling part 1
2 Coupling part 2
3 Coupling part 3

Size	Speed[1]	Maximum bore[2]		DA	ND1	ND2	NL1 NL2	S	U1	U2	P	Weight[3]
	n_{max}	D1	D2									m
	rpm	mm	mm	mm	mm	mm	mm	mm	mm	mm	mm	kg
110	6,300	55	45	110	86	60.5	40	2 – 4	34	20	33	2.7
125	6,100	60	55	125	100	73.5	50	2 – 4	36	23	38	4.2
140	5,800	65	60	140	100	80.5	55	2 – 4	34	28	43	5.6
160	5,100	70	70	160	108	93.5	60	2 – 6	39	28	47	7.8
180	4,500	80	80	180	125	106	70	2 – 6	42	30	50	11
200	4,000	85	90	200	140	119	80	2 – 6	47	32	53	16
225	3,600	90	100	225	150	135	90	2 – 6	52	38	61	23
250	3,300	100	115	250	165	153	100	3 – 8	60	42	69	32
280	3,000	110	125	280	180	168	110	3 – 8	65	42	73	42
315	2,600	120	145	315	200	196	125	3 – 8	70	47	78	61
350	2,400	140	165	350	230	226	140	3 – 8	74	51	83	85
400	2,000	150	180	400	250	246	160	3 – 8	78	56	88	119
440	1,900	160	190	440	265	261	180	5 – 10	86	64	99	156
480	1,800	180	215	480	300	296	190	5 – 10	90	65	104	199
520	1,500	190	225	520	315	310	210	5 – 10	102	68	115	251
560	1,500	200	230	560	320	316	220	6 – 12	115	80	125	303
610	1,300	220	250	610	352	348	240	6 – 12	121	88	135	393

Size	Speed[1]	Maximum bore[2]										Weight[3]
	n_{max}	D1	D2	DA	ND1	ND2	NL1 NL2	S	U1	U2	P	m
	rpm	mm	mm	mm	mm	mm	mm	mm	mm	mm	mm	kg
660	1,200	240	275	660	384	380	260	6 – 12	132	96	145	501
710	1,100	260	300	710	416	412	290	6 – 12	138	102	155	623

Table A-1 : Speeds, geometry data and weights of type A

[1] For the “AIQ Detect-ready” variant, observe the maximum speed for AIQ Detect. You will find the maximum speeds in the AIQ Direct instructions.

[2] Maximum bore for parallel keyway in accordance with DIN 6885/1.

[3] Weight applies to one coupling with maximum bore.

A.1.2 Type B

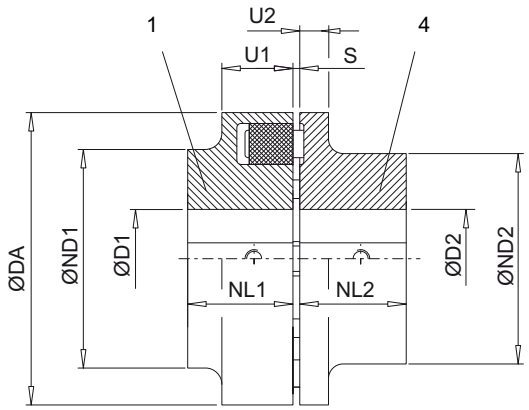

Figure A-2: Type B

1 Coupling part 1
4 Coupling part 4

Size	Speed[1]	Maximum bore[2]									Weight[3]
	$n_{max.}$	D1	D2	DA	ND1	ND2	NL1 NL2	S	U1	U2	m
	rpm	mm	mm	mm	mm	mm	mm	mm	mm	mm	kg
58	9,000	22	25	58	58	40	20	2 – 4	20	8	0.4
68	8,400	28	30	68	68	50	20	2 – 4	20	8	0.6
80	7,200	38	42	80	80	68	30	2 – 4	30	10	1.3
95	6,600	48	48	95	76	76	35	2 – 4	30	12	1.8
110	6,300	55	55	110	86	86	40	2 – 4	34	14	2.8
125	6,100	60	60	125	100	100	50	2 – 4	36	18	4.7
140	5,800	65	65	140	100	100	55	2 – 4	34	20	5.7
160	5,100	70	70	160	108	108	60	2 – 6	39	20	7.8
180	4,500	80	80	180	125	125	70	2 – 6	42	20	12
200	4,000	85	85	200	140	140	80	2 – 6	47	24	17
225	3,600	90	90	225	150	150	90	2 – 6	52	18	23
250	3,300	100	100	250	165	165	100	3 – 8	60	18	30
280	3,000	110	110	280	180	180	110	3 – 8	65	20	41

Table A-2 : Speeds, geometry data and weights of type B

[1] For the “AIQ Detect-ready” variant, observe the maximum speed for AIQ Detect. You will find the maximum speeds in the AIQ Direct instructions.

[2] Maximum bore for parallel keyway in accordance with DIN 6885/1.

[3] Weight applies to one coupling with maximum bore.

A.1.3 Type ADS

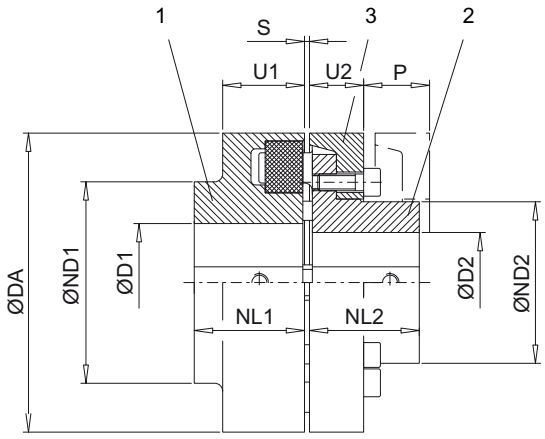

Figure A-3: Type ADS

1 Coupling part 1
2 Coupling part 2
3 Coupling part 3

Size	Speed	Maximum bore[1]										Weight[2]
	$n_{max.}$	D1	D2	DA	ND1	ND2	NL1 NL2	S	U1	U2	P	m
	rpm	mm	mm	mm	mm	mm	mm	mm	mm	mm	mm	kg
118	5 300	50	45	118	86	60,5	40	2 … 4	34	20	33	2,8
135	5 100	60	55	135	100	73,5	50	2 … 4	36	23	38	4,3
152	4 900	65	60	152	108	80,5	55	2 … 4	36	28	43	5,9
172	4 250	70	70	172	118	93,5	60	2 … 6	41	28	47	8,2
194	3 800	80	80	194	135	106	70	2 … 6	44	30	50	12
218	3 400	85	90	218	150	119	80	2 … 6	47	32	53	17
245	3 000	90	100	245	150	135	90	2 … 6	52	38	61	23
272	2 750	100	115	272	165	153	100	3 … 8	60	42	69	32
305	2 450	110	125	305	180	168	110	3 … 8	65	42	73	43
340	2 150	120	145	340	200	196	125	3 … 8	70	47	78	61
380	2 000	140	165	380	230	226	140	3 … 8	74	51	83	86
430	1 700	150	180	430	250	246	160	3 … 8	78	56	88	120
472	1 550	160	190	472	265	261	180	5 … 10	86	64	99	161
514	1 400	180	215	514	300	296	190	5 … 10	90	65	104	206
556	1 300	190	225	556	315	310	210	5 … 10	102	68	115	256

Table A-3 : Speed, geometry data and weights for ADS type

[1] Maximum bore for parallel keyway in accordance with DIN 6885/1.

[2] Weight applies to one coupling with maximum bore.

A.1.4 Type BDS

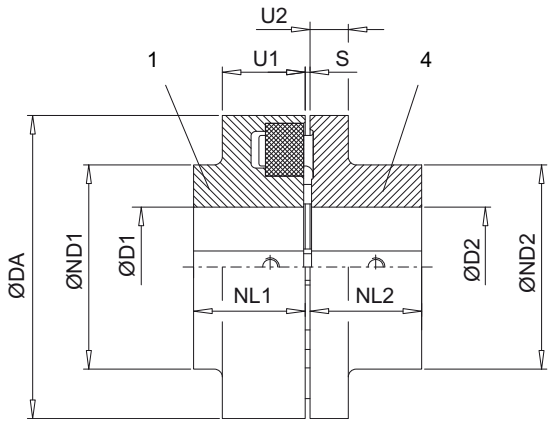

Figure A-4: Type BDS

1 Coupling part 1
4 Coupling part 4

Size	Speed	Maximum bore[1]									Weight[2]
	$n_{max.}$	D1	D2	DA	ND1	ND2	NL1 NL2	S	U1	U2	m
	rpm	mm	mm	mm	mm	mm	mm	mm	mm	mm	kg
66	7 500	20	25	66	66	40	20	2 … 4	20	8	0,46
76	7 000	28	30	76	76	50	20	2 … 4	20	8	0,64
88	6 000	35	42	88	88	68	30	2 … 4	30	10	1,4
103	5 500	45	48	103	76	76	35	2 … 4	30	12	2,1
118	5 300	50	55	118	86	86	40	2 … 4	34	14	3,0
135	5 100	60	60	135	100	100	50	2 … 4	36	18	5,1
152	4 900	65	65	152	108	100	55	2 … 4	36	20	6,4
172	4 250	70	70	172	118	108	60	2 … 6	41	20	8,7
194	3 800	80	80	194	135	125	70	2 … 6	44	20	13
218	3 400	85	85	218	150	140	80	2 … 6	47	24	19
245	3 000	90	90	245	150	150	90	2 … 6	52	18	24
272	2 750	100	100	272	165	165	100	3 … 8	60	18	32
305	2 450	110	110	305	180	180	110	3 … 8	65	20	43

Table A-4 : Speed, geometry data and weights for BDS type

[1] Maximum bore for parallel keyway in accordance with DIN 6885/1.

[2] Weight applies to one coupling with maximum bore.

A.2 Shaft misalignment values during operation

The following table shows the maximum permissible shaft misalignment values ΔS_{perm} and ΔKr_{perm}. The values are rounded and specified in mm.

Type / size		Coupling speed [rpm]								
A, B	ADS, BDS	250	500	750	1,000	1,500	2,000	3,000	4,000	5,000
58	**66**	0.4	0.3	0.25	0.2	0.2	0.15	0.15	0.1	0.1
68	**76**	0.4	0.3	0.25	0.2	0.2	0.15	0.15	0.1	0.1
80	**88**	0.4	0.3	0.25	0.2	0.2	0.15	0.15	0.1	0.1
95	**103**	0.5	0.35	0.25	0.25	0.2	0.2	0.15	0.1	0.1
110	**118**	0.5	0.35	0.3	0.25	0.2	0.2	0.15	0.1	0.1
125	**135**	0.5	0.4	0.3	0.25	0.25	0.2	0.15	0.15	0.1
140	**152**	0.6	0.4	0.35	0.3	0.25	0.2	0.2	0.15	0.15
160	**172**	0.6	0.5	0.4	0.35	0.3	0.25	0.2	0.15	0.15
180	**194**	0.6	0.5	0.4	0.35	0.3	0.25	0.2	0.2	
200	**218**	0.8	0.55	0.45	0.4	0.3	0.3	0.2	0.2	
225	**245**	0.8	0.55	0.5	0.4	0.35	0.3	0.25		
250	**272**	0.8	0.6	0.5	0.4	0.35	0.3	0.25		
280	**305**	1	0.7	0.6	0.5	0.4	0.35	0.3		
315	**340**	1	0.7	0.6	0.5	0.4	0.35			
350	**380**	1	0.8	0.6	0.6	0.5	0.4			
400	**430**	1.2	0.9	0.7	0.6	0.5	0.4			
440	**472**	1.3	1	0.7	0.7	0.6				
480	**514**	1.4	1	0.8	0.7	0.6				
520	**556**	1.5	1.1	0.9	0.8	0.65				
560		1.6	1.2	1	0.8	0.65				
610		1.8	1.3	1	0.9					
660		1.9	1.4	1.1	1					
710		2	1.5	1.2	1					

Table A-5 : Maximum permissible shaft misalignment values during operation

You can calculate the numerical values in the table and their intermediate values as follows:

$\Delta Kr_{perm} = \Delta S_{perm} = (0.1 + DA / 1{,}000) \cdot 40 / \sqrt{n}$

Coupling speed n in rpm

DA in mm (see Speeds, geometry data and weights (Page 57))

Radial misalignment ΔKr_{perm} in mm

The values in column “250 rpm” of the table above apply for speeds of < 250 rpm.

A.3 Tightening torques and widths A/F

⚠ WARNING

The tightening torques specified in these instructions for part 13 are only applicable to N-EUPEX couplings with instructions with an issue date from 10/2020 onwards. For couplings supplied prior to 10/2020, lower tightening torques are permissible.

- Only use the instructions valid when the coupling was supplied. Pay careful attention to the specified tightening torques.
- You will find the currently valid operating instructions on the Flender website. Older editions can be requested from Flender.

N-EUPEX-Coupling	N-EUPEX DS-Coupling	Tightening torque T_A and width A/F SW for Hexagon socket screws according to DIN EN ISO 4762		
		Type A	Type ADS	Types A and ADS
Size	Size	T_A Nm	T_A Nm	SW mm
110	**118**	25	25	6
125	**135**	25	25	6
140	**152**	49	49	8
160	**172**	49	49	8
180	**194**	49	49	8
200	**218**	86	86	10
225	**245**	86	86	10
250	**272**	210	210	14
280	**305**	210	210	14
315	**340**	210	210	14
350	**380**	410	410	17
400	**430**	410	410	17
440	**472**	410	410	17
480	**514**	710	710	19
520	**556**	710	710	19
560	-	710	710	19
610	-	1 450	1 450	22
660	-	1 450	1 450	22
710	-	1 450	1 450	22

Table A-6 : Tightening torques for part 13 of types A and ADS

Apply the specified tightening torques as listed in Section Tightening procedure (Page 65).

A.4 Tightening procedure

Tightening torques must be observed taking into account the following table:

Scatter of the torque applied at the tool	**Tightening procedure** **(As a rule, the tightening procedures listed are within the specified tool torque scatter.)**
±5 %	• Hydraulic tightening with mechanical screwdriver • Torque-controlled tightening with a torque wrench or a torque wrench that gives a signal • Tightening with a precision mechanical screwdriver with dynamic torque measurement

Table A-7 : Tightening procedure

Information

The tightening torques apply to:

- Screws with untreated surfaces that are not oiled or are only lightly oiled. Use of lubricant coating or lubricant is not permitted.
- Screws that should be used with screw locking agent.

A.5 Flexible elements (12)

A.5.1 Use and storage of flexible elements (12)

Note the following concerning the use and storage of the flexible elements (12):

- Storage possible for up to 5 years
- Protect against direct sunlight, artificial light with a high UV-content and extreme temperatures
- Avoid contact with aggressive media
- Only replace complete sets
- Only use flexible elements of the same type and age

A.5.2 N-EUPEX flexible elements (12)

Material	Hardness	Comment	Marking	Ambient temperature	Approved for Explosion group
NBR	80 Shore A	Standard	Black flexible elements with blue stripe	-50 °C … +80 °C	IIA, IIB, IIC
NBR	65 Shore A	Special, soft, Shifting the Resonance speed, Rated torque reduced	Black flexible elements with green stripe	-50 °C … +80 °C	IIA, IIB, IIC
HP (TPU)	97 Shore A	Special, hard, electrically insulating	Blue flexible elements	-50 °C … +80 °C	IIA, IIB
HP (NBR)	90 Shore A	Special, hard, Shifting the Resonance speed	Black flexible elements with magenta stripe	-50 °C … +80 °C	IIA, IIB, IIC
HP (NBR)	90 Shore A	Special, hard, Shifting the Resonance speed	Black flexible elements fabric reinforced	-50 °C … +80 °C	IIA, IIB, IIC
NBR	80 Shore A	Special, increased (low-backlash)	Black flexible elements with yellow stripe	-50 °C … +80 °C	IIA, IIB, IIC
NBR	65 Shore A	Special, increased (low-backlash), Shifting the Resonance speed, Rated torque reduced	Black flexible elements with white stripe	-50 °C … +80 °C	IIA, IIB, IIC
NR	80 Shore A	Special, Low-temperature use	Black flexible elements with orange stripes	-60 °C … +50 °C	IIA, IIB, IIC
HNBR	80 Shore A	Special, High-temperature use	Black flexible elements with red stripes	-10 °C … +100 °C	not approved
NBR	80 Shore A	Special, electrically insulating	Green flexible elements	-30 °C … +80 °C	IIA, IIB

Table A-8 : N-EUPEX flexible elements

A.5.3 N-EUPEX DS flexible elements (12)

Material	Hardness	Comment	Marking	Ambient temperature	Approved for explosion group
NBR	90 Shore A	Standard	Black flexible elements	-30 °C to +80 °C	IIA, IIB, IIC

Table A-9 : N-EUPEX DS flexible elements

Declaration of Conformity

B

EU Declaration of Conformity

Product:
FLENDER N-EUPEX® couplings
Types A, B
FLENDER N-EUPEX-DS® couplings
Types ADS, BDS

Name and address of the manufacturer:
Flender GmbH
Schlavenhorst 100
46395 Bocholt
Germany

This Declaration of Conformity is issued under the sole responsibility of the manufacturer.

This declaration refers to the product mentioned above.

The object of the declaration described above is in conformity with the relevant EU harmonisation legislation:
– Directive 2014/34/EU, Official Journal L 96, 29 March 2014, Pages 309-356

Harmonised standards or other technical specifications on which the Declaration of Conformity is based:

EN 1127-1	: 2019
EN 1127-2	: 2014
EN ISO 80079-36	: 2016
EN ISO 80079-37	: 2016
EN ISO/IEC 80079-38	: 2016

Notified Body, DEKRA Testing and Certification GmbH (0158) has received the technical documentation.

Signed for and on behalf of:

Flender GmbH



Bocholt, 2026-06-22

Dr Dennis Geers, President, Business Unit Couplings

FLENDER COUPLINGS

N-EUPEX / N-EUPEX DS
Assembly and operating instructions M3100-01en
Version 06/2026

Flender GmbH
Alfred-Flender-Strasse 77
46395 Bocholt
Germany

FLENDER