FLENDER COUPLINGS

ELPEX

Assembly and operating instructions M3300-01en
Edition 09/2022

ENG, ENGS, EFG, EFGS

flender.com

FLENDER

Original assembly and operating instructions

M3300-01
Edition 09/2022

V1
11/10/2022
10:12:16

Copyright (©2022 Flender GmbH)

Table of contents

1 Introduction 11

1.1 Legal information 11

1.2 About these instructions 12

1.3 Text attributes 12

1.4 Copyright 13

2 Safety instructions 15

2.1 General information 15

2.2 Intended use 16

2.3 General warning notices 17

3 Description 19

4 Application planning 21

4.1 Transport of the coupling 21

4.2 Storage of the coupling 21

5 Assembling 23

5.1 Preparatory work 23

5.2 Assembling the coupling 23

5.2.1 Mounting coupling parts 1 (1) or 2 (2) 24

5.2.2 Mounting types ENG and ENGS 25

5.2.3 Mounting types EFG and EFGS 25

5.3 Aligning the coupling 26

5.3.1 Purpose of alignment 26

5.3.2 Possible misalignment 26

5.3.2.1 Description of the reference dimensions 27

5.3.2.2 Angular misalignment 27

5.3.2.3 Radial misalignment 28

5.3.2.4 Axial misalignment 28

6 Commissioning 29

7 Operation 31

7.1 Normal operation of the coupling 31

7.2 Fault - causes and correction 31

7.2.1 Procedure in the event of malfunctions 31

7.2.2 Identifying the fault cause ... 31
7.2.2.1 Possible faults ... 32
7.2.2.2 Possible causes ... 33
7.2.2.2.1 Unsuitable coupling ... 33
7.2.2.2.2 Assembly-related causes ... 33
7.2.2.2.3 Maintenance-related causes ... 34
7.2.2.2.4 Specific assembly-related and maintenance-related causes ... 34
7.2.3 Resolving faults ... 34
7.2.3.1 Replacing wearing parts ... 34
7.2.3.2 Correcting the changed alignment ... 34

8 Maintenance ... 37

8.1 Maintenance intervals ... 37
8.2 Maximum permissible wear ... 38
8.3 Replacing wearing parts ... 38
8.4 Removing coupling part 1 (1) or 2 (2) ... 41

9 Service and support ... 43

9.1 Contact ... 43

10 Disposal ... 45

11 Spare parts ... 47

11.1 Ordering spare parts ... 47
11.2 Spare parts drawing and spare parts list ... 48
11.2.1 Spare parts drawing for types ENG and ENGS ... 49
11.2.2 Spare parts drawing for types EFG and EFGS ... 50
11.2.3 Spare parts list for types ENG, ENGS and EFG, EFGS ... 51

A Technical data ... 53

A.1 Geometry data and weights ... 53
A.1.1 Dimension drawing of type ENG and ENGS ... 53
A.1.2 Technical data of types ENG and ENGS ... 54
A.1.3 Dimension drawing of type EFG and EFGS ... 55
A.1.4 Technical data of types EFG and EFGS ... 55
A.1.5 Connection dimensions at the coupling ring (9 or 19) ... 56
A.2 Shaft misalignment values during operation ... 57
A.3 Tightening torques and widths A/F ... 58
A.3.1 Tightening torques and widths A/F for the parts 8, 12, 14, 26, 27 ... 58
A.3.2 Tightening torques and widths A/F for the screw connection of coupling part 3 (3) or 30 (30) to the mating part ... 59
A.3.3 Tightening torques and widths A/F for set screws ... 59

A.4 Tightening procedure 60
A.5 Flexible rings (5) 60
A.5.1 Use and storage of the flexible rings (5) 60
A.5.2 ELPEX flexible rings (5) 61

List of tables

Table 2-1	General warnings	15
Table 4-1	Types of preservative agents for long-term storage	22
Table 7-1	Table of faults	32
Table 8-1	Maintenance intervals	37
Table 8-2	Flexible ring screw connection	39
Table 11-1	Spare parts list for types ENG, ENGS and EFG, EFGS	51
Table A-1	Speeds, geometry data and weights of types ENG and ENGS	54
Table A-2	Speeds, geometry data and weights of types EFG and EFGS	55
Table A-3	Connection dimensions at the coupling ring (9 or 19)	57
Table A-4	Maximum permissible shaft misalignment values during operation	57
Table A-5	Tightening torques and widths A/F for the parts 8, 12, 14, 26, 27	58
Table A-6	Tightening torques and widths A/F for the screw connection of coupling part 3 (3) or 30 (30) to the mating part	59
Table A-7	Tightening torques and widths A/F for set screws	59
Table A-8	Tightening procedure	60
Table A-9	ELPEX flexible rings	61

List of figures

Figure 3-1 Types ENG, ENGS and EFG, EFGS 20

Figure 4-1 Transport symbols 21

Figure 5-1 Possible misalignment 26

Figure 5-2 Reference dimension a for radial misalignment 27

Figure 5-3 Reference dimension b for angular and axial misalignment 27

Figure 8-1 Wear inspection 38

Figure 11-1 Spare parts drawing for types ENG and ENGS 49

Figure 11-2 Spare parts drawing for types EFG and EFGS 50

Figure A-1 Types ENG and ENGS 53

Figure A-2 Types EFG and EFGS 55

Figure A-3 Connection dimensions at the coupling ring (9 or 19) 57

Introduction 1

1.1 Legal information

Warning system

These instructions contain information you must observe for your own personal safety as well as to avoid damage to property and persons. The information regarding your personal safety is highlighted with a warning triangle. Information exclusively regarding property damage alone is not marked with a warning triangle. Depending on the hazard class, the warnings shall be depicted as follows, in descending order.

⚠ DANGER

means that death or severe physical injury **will** occur if the relevant precautionary measures are not taken.

⚠ WARNING

means that death or severe physical injury **may** occur if the relevant precautionary measures are not taken.

⚠ CAUTION

means that mild physical injury may occur if the relevant precautionary measures are not taken.

NOTICE

means that damage to property may occur if the relevant precautionary measures are not taken.

If multiple hazard classes come into play, the warning for the highest level in question shall always be used. If a warning containing the warning triangle warns of harm to individuals, the same warning may also include a warning regarding damage to property.

Information

Information

Information offers additional notes, assistance and tips for handling the product.

Qualified personnel

The product/system associated with this documentation may only be used by **qualified personnel** trained to perform the relevant tasks, taking into account the associated documentation for the relevant tasks, particularly the safety information and warnings included therein. Due to their qualification and experience, qualified personnel are capable of detecting risks and avoiding potential hazards when dealing with these products/systems.

Intended use of Flender products

Please note the following:

⚠ WARNING

Flender products are only suitable for the uses set out in the catalogue and associated technical documentation. If third-party products and components are used, these must be recommended and/or authorised by Flender. Safe and flawless operation of the products requires proper transport, proper storage, setup, assembly, installation, commissioning, operation and maintenance. The permissible environmental conditions must be adhered to. Instructions in the associated documentation must be followed.

Trademarks

All designations marked with the trademark symbol ® are registered trademarks of Flender GmbH. Other designations in this document may be trademarks whose use by third parties for their own purposes may violate the rights of the owner.

Liability disclaimer

We have assessed the contents of these instructions for compliance with the hardware and software described. However, deviations cannot be ruled out, so we are unable to accept liability for full compliance. The details in these instructions are regularly reviewed and necessary corrections are contained in subsequent editions.

1.2 About these instructions

These instructions describe the coupling and provide information about its handling - from assembly to maintenance. Please keep these instructions for later use.

Please read these instructions prior to handling the coupling and follow the information in them.

1.3 Text attributes

The warning notice system is explained on the back of the inner cover. Always follow the safety information and notices in these instructions.

In addition to the warning notices, which have to be observed without fail, you will find the following text attributes in these instructions:

1. Procedural instructions are shown as a numbered list. Always perform the steps in the order given.

- Lists are formatted as bulleted lists.
  - The dash is used for lists at the second level.

(1) Numbers in brackets are part numbers.

1.4 Copyright

The copyright of these instructions is held by Flender.

These instructions must not be used wholly or in parts without our authorisation or be given to third parties.

If you have any technical queries, please contact our factory or one of our service outlets (refer to Service and support (Page 43)).

Safety instructions 2

2.1 General information

Instructions

These instructions are part of the delivery. Always keep these instructions close to the coupling.

Please make sure that every person who is commissioned to work on the coupling has read and understood these instructions prior to handling the coupling and observes all of the points.

Only the knowledge of these instructions can avoid faults on the coupling and ensure fault-free and safe operation. Non-adherence to the instructions can cause product or property damage or personal injury. Flender does not accept any liability for damage or operating failures that are due to non-adherence to these instructions.

State of the art

The coupling described here has been designed in consideration of the latest findings for demanding technical requirements. This coupling is state-of-the-art at the time of printing these instructions.

In the interest of further development, Flender reserves the right to make such changes to the individual assembly units and accessories that increase performance and safety while maintaining the essential features.

Symbols

ISO	ANSI	Warning
		Warning – hazardous electrical voltage
		Warning – explosive substances
	---	Warning – entanglement hazard
	---	Warning – hot surfaces
	---	Warning – corrosive substances
	---	Warning – suspended load

ISO	ANSI	Warning
	---	Warning – hand injuries

Table 2-1: General warnings

Explanation regarding Machinery Directive 2006/42/EC

The couplings described here are “components” in accordance with the Machinery Directive and do not require a Declaration of Incorporation.

Protective clothing

In addition to the generally prescribed personal protective equipment (safety shoes, overalls, helmet, etc.), also wear suitable protective gloves and safety glasses when handling the coupling.

Using the coupling

The relevant occupational safety and environmental protection regulations must be complied with at all times during transport, assembly, installation, dismantling, operation and maintenance of the coupling.

Only qualified personnel may operate, assemble, maintain and repair the coupling. Information about qualified personnel can be found in the legal notes at the beginning of these instructions.

If hoisting gear or load lifting devices are used for transporting, these have to be suitable for the weight of the coupling.

If the coupling has visible damage, it may not be assembled or put into operation.

The coupling may only be operated in a suitable housing or with touch protection according to applicable standards. This also applies to test runs and rotational direction checks.

Work on the coupling

Only carry out work on the coupling when it is not in operation and is not under load.

Take measures to prevent the accidental restarting of the drive aggregate. Attach an information notice to the start switch stating clearly that work is being carried out on the coupling. Ensure that the entire unit is not under load.

2.2 Intended use

Only use the coupling according to the conditions specified in the service and delivery contract and the technical data in the annex. Deviating operating conditions are considered improper use. The user or operator of the machine or system is solely liable for any resulting damage.

When using the coupling please specifically observe the following:

- Do not make any modifications to the coupling that go beyond the permissible machining described in these instructions. This also applies to touch protection facilities.

- Use only original replacement parts from Flender. Flender only accepts liability for original replacement parts from Flender.
  Other replacement parts are not tested and approved by Flender. Non-approved replacement parts may possibly change the design characteristics of the coupling and thus impact active and/or passive safety.
  Flender will accept no liability or warranty whatsoever for damage occurring as a result of the use of non-approved replacement parts. The same applies to any accessories that were not supplied by Flender.

If you have any queries, please contact our customer service organisation (see Service and support (Page 43)).

2.3 General warning notices

⚠ WARNING

Danger if the coupling fractures

The coupling may burst if it is not used for its intended use. There is a risk of fatal injury from flying fragments.

- Use the coupling for the purpose for which it is intended.



⚠ WARNING

Danger from hot coupling parts

Risk of injury due to hot surfaces.

- Wear suitable protective equipment (gloves, safety goggles).



⚠ WARNING

Risk of chemical burns due to chemical substances

There is a risk of chemical burns when handling aggressive cleaning agents.

- Please observe the manufacturer's information on how to handle cleaning agents and solvents.
- Wear suitable protective equipment (gloves, safety goggles).

⚠ CAUTION

Physical injury

Risk of injury due to falling coupling parts.

- Secure the coupling parts to prevent them from falling.

Description

3

The ELPEX couplings described here are torsionally flexible couplings that are free of torsional backlash and are available in various types and sizes.

Types ENG and EFG have no fail-safe device. Types ENGS and EFGS are fail-safe.

These instructions describe the assembly and operation of an ELPEX coupling arranged horizontally with a shaft-hub connection made by a cylindrical or conical bore with parallel key and/or a flange (coupling part 3 or 30). Please consult Flender if you want to use a different type of installation.

Application

ELPEX couplings are suitable for drives with highly unequal torque load and/or with high levels of misalignment.

Structure

The diagrams show the various types with their constituent parts and their part numbers.

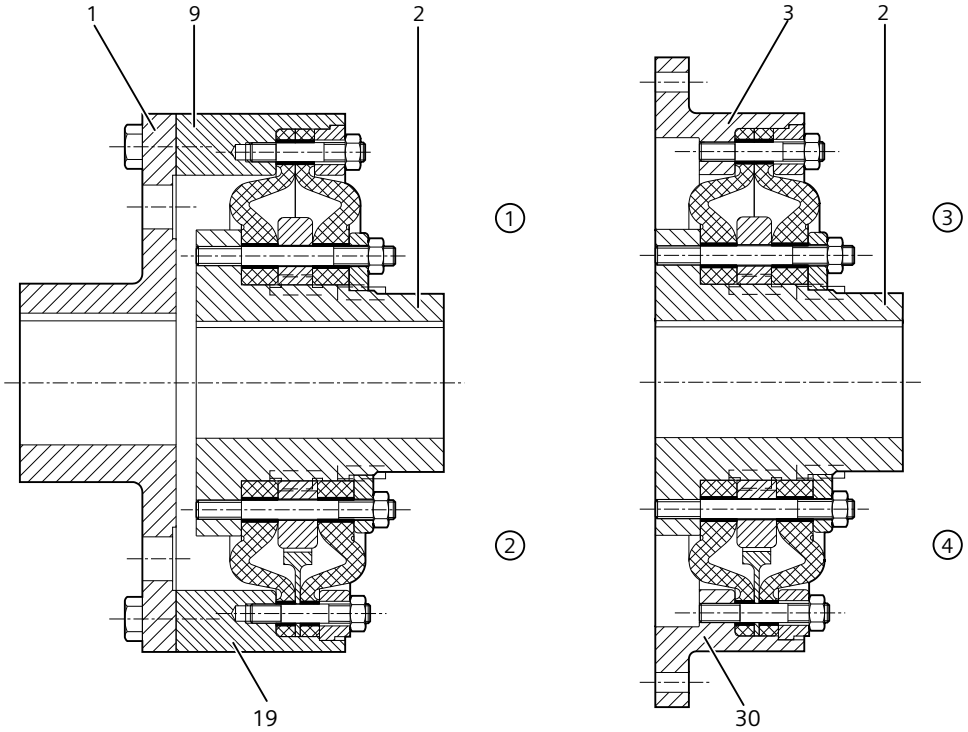

Figure 3-1: Types ENG, ENGS and EFG, EFGS

① Type ENG
② Type ENGS
③ Type EFG
④ Type EFGS
1 Coupling part 1
2 Coupling part 2
3 Coupling part 3 (type EFG)
9 Coupling ring 9 (type ENG)
19 Coupling ring 19 (type ENGS)
30 Coupling part 30 (type EFGS)

The complete replacement parts drawing and spare parts list can be found at Spare parts drawing and spare parts list (Page 48).

Application planning 4

Check the delivery for damage and for completeness. Report any damage and/or missing parts to Flender immediately.

The coupling is delivered in individual parts and preassembled groups. Preassembled groups may not be dismantled.

4.1 Transport of the coupling



⚠ WARNING

Severe personal injury due to improper transport

Severe personal injury due to falling components or due to crushing. Damage to coupling parts possible due to use of unsuitable transport means.

- Only use lifting gear and load suspension devices with sufficient load bearing capacity for transport.
- Please observe the symbols applied on the packaging.

If not specifically contractually agreed otherwise, the packaging complies with the HPE Packaging Directive.

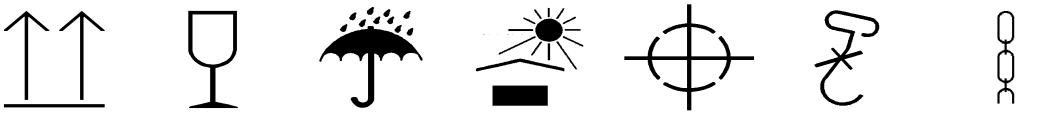

Figure 4-1: Transport symbols

4.2 Storage of the coupling

NOTICE

Property damage due to improper storage

Negative changes to the physical properties of the coupling and/or coupling damage.

- Please observe the specifications on storing the coupling.

The coupling, unless not specifically ordered otherwise, is supplied with preservation and can be stored for up to 3 months.

Information about storing the coupling

- Ensure that the storage room is dry (relative humidity < 65 %) and free of dust.
- Ensure that there is no condensation.

- Do not store the coupling together with corrosive chemicals, acids, caustic solutions, etc.
- If the coupling contains elastomer components, ensure that there are no devices in the storage room that produce ozone, such as fluorescent lights, mercury vapour lamps or high-voltage electrical equipment.
- Store the coupling on suitable supports or in suitable containers.

Long-term storage

NOTICE

Property damage due to improper long-term storage

Negative changes to the physical properties of the coupling and/or coupling damage.

- Please observe the specifications on long-term storage.

1. You can find the required type of preservative agent in the following table (types of preservative agents for long-term storage).
2. Remove the elastomer components. These must not come into contact with cleaning agents and long-term preservative agents.
3. Clean the coupling parts.
4. Apply the stipulated preservative agent.
5. Store the coupling parts and the elastomer components separately.

Preservative agent	Features	Indoor storage	Outdoor storage
Oil spray	Corrosion protection	Up to 12 months	Up to 4 months
Tectyl 846 or similar	Long-term preservative agent on wax basis	Up to 36 months	Up to 12 months
Emulsion cleaner + VCI foil	Active system, reusable	Up to 5 years	Up to 5 years

Table 4-1: Types of preservative agents for long-term storage

Assembling 5

Assembly of the coupling comprises the following steps:

- Preparatory work (Page 23)
- Assembling the coupling (Page 23)
- Aligning the coupling (Page 26)

⚠ WARNING

Danger of injury due to bursting of the coupling

If you do not observe the information stipulated here regarding assembly, this can lead to bursting of the coupling during operation. There is a risk of fatal injury from flying fragments.

- Please observe all the stipulations concerning assembly.

Notes regarding assembly of the coupling

- Only use undamaged components when assembling the coupling.
- Follow the assembly sequence.
- Please ensure that there is sufficient space at the assembly location and that the location is tidy and clean in order to be able to assemble and maintain the coupling without any risk.
- If a dimension drawing has been created for the coupling, please observe the information it contains as a matter of priority.

5.1 Preparatory work

No preparatory work is required, since the coupling is supplied finish bored, grooved and balanced.

Balancing is performed to customer specifications or according to the half-parallel key agreement (DIN ISO 21940-32) to balancing quality G16 (DIN ISO 21940).

5.2 Assembling the coupling

NOTICE

Property damage

Damage to the elastomer components from cleaning agents.

- Ensure that the elastomer components do not come into contact with cleaning agents.

NOTICE

Property damage

Damage to the shaft end, the coupling parts and/or the parallel key.

- Note the following handling instruction.

ELPEX couplings are supplied preassembled.

Assembly of the coupling comprises the following steps:

- Mounting coupling parts 1 (1) or 2 (2) (Page 24)
- Mounting types ENG and ENGS (Page 25)
- Mounting types EFG and EFGS (Page 25)

5.2.1 Mounting coupling parts 1 (1) or 2 (2)

Procedure

1. For types ENG and ENGS, dismantle the cylindrical pins (13) and the hexagon bolts (14) and separate the coupling halves.
2. Remove the wooden pats attached as a transport brace for the elastic ring (5).
3. Unscrew the set screw out of coupling parts 1 (1) and/or 2 (2) until it is no longer possible for there to be a collision with the parallel key or the shaft.
4. Clean the bores and shaft ends.
5. Coat the bores of coupling parts 1 (1) and/or 2 (2) and the shafts with MoS_2 assembly paste (e.g. Microgleit LP 405).
6. Mount the coupling parts 1 (1) and/or 2 (2) on the shaft.

⚠ WARNING

Danger if the coupling fractures

If you do not observe the information stipulated here when assembling coupling parts with conical bore, then this can cause the coupling to fracture in operation. There is a risk of fatal injury from flying fragments.

- Mount the coupling parts 1 (1) and/or 2 (2) with conical bore and parallel keyway on the shaft in cold condition. Secure the coupling parts with suitable end plates without pulling the coupling parts further onto the cone (fitting dimension = 0).

Information

Coupling parts with cylindrical bore

To make assembly easier, you can heat coupling part 1 (1) with cylindrical bore up to a maximum of 120 °C if required. Protect adjacent components against damage and heating to temperatures above 80 °C. Due to the attached elastic ring (5), coupling part 2 (2) with cylindrical bore can only be heated to a maximum of 80 °C.

7. If you have heated coupling parts 1 (1) and/or 2 (2), wait until the coupling parts have cooled to a temperature ≤ 30 °C before continuing with assembly.

8. Secure the coupling parts using a set screw or an end plate.
   For coupling part 1 (1) when securing with a set screw the shaft must not protrude or be set back from the inner side of the hub.
   Put coupling part 2 (2) with the total length NL2 on the shaft. The shaft must not protrude from the inner side of the hub.
9. Tighten up the set screw or the screw to attach the end plate to the specified tightening torque T_A (for the set screw please refer to Table A-23 Tightening torques and widths A/F for set screws (Page 59)).

5.2.2 Mounting types ENG and ENGS

Procedure

1. Move the machines to be coupled close to one another. Note the marking on the coupling part 1 (1) and 9 (9) or 19 (19) and the reference dimension b.
   You will find the description of the reference dimension b in Description of the reference dimensions (Page 27).
   You will find the permissible dimensions for the reference dimension b in section Shaft misalignment values during operation (Page 57).
2. Insert the screws (14) and tighten them by hand.
3. Knock in the parallel pins (13).
4. Tighten the screws (14) with the specified tightening torque T_A (see Tightening torques and widths A/F for the parts 8, 12, 14, 26, 27 (Page 58)).

5.2.3 Mounting types EFG and EFGS

Procedure

1. Clean the contact surfaces of the coupling part 3 (3) or 30 (30).
2. Move the machines to be coupled close to one another. Pay attention to the reference dimension b when doing this .
   You can find the illustration of reference dimension b in the Description of the reference dimensions (Page 27).
   The permitted dimensions for reference dimension b can be found in Section Shaft misalignment values during operation (Page 57).
3. Flange-mount the coupling part 3 (3) or 30 (30) on the mating part.
4. Observe the flange connection dimension DFA and tighten the bolts with the corresponding tightening torque T_A an (see Table A-22 Tightening torques and widths A/F for the bolt connection on coupling part 3 (3) or 30 (30) with the mating part (Page 59)).

5.3 Aligning the coupling

5.3.1 Purpose of alignment

The shafts that are joined by the coupling are never on an ideal precise axis but have a certain amount of misalignment.

Misalignment in the coupling leads to restoring forces that can stress adjacent machine parts (e.g. the bearings) to an unacceptable extent.

The misalignment values in operation result from the following:

- Misalignment due to assembly
  Incorrect position due to a lack of precision when aligning
- Misalignment due to operation
  Example: Load-related deformation, thermal expansion

You can minimise misalignment by aligning after assembly. A lower misalignment in the coupling has the following advantages:

- Reduced wear of the elastomer components
- Reduced restoring forces
- Misalignment reserves for operation of the coupling

You can find the maximum permitted shaft misalignment values during operation in section Shaft misalignment values during operation (Page 57).

5.3.2 Possible misalignment

The following types of misalignment can occur:

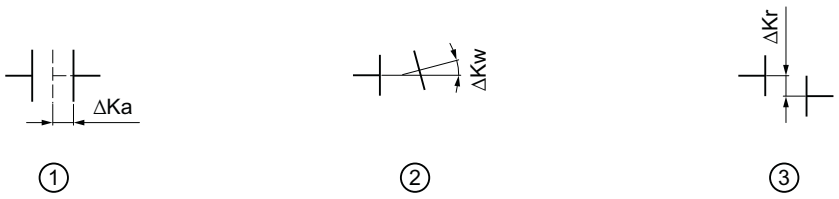

Figure 5-1: Possible misalignment

① Axial misalignment (ΔKa)
② Angular misalignment (ΔKw)
③ Radial misalignment (ΔKr)

5.3.2.1 Description of the reference dimensions

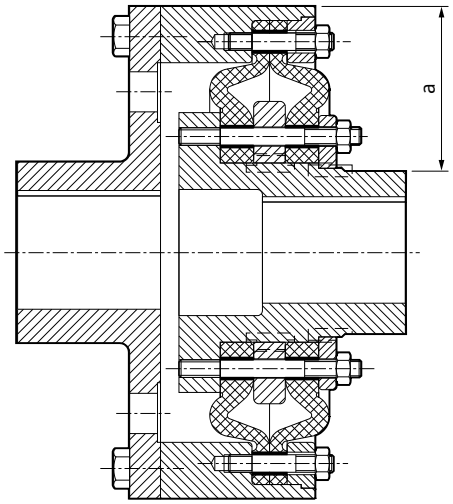

Figure 5-2: Reference dimension a for radial misalignment

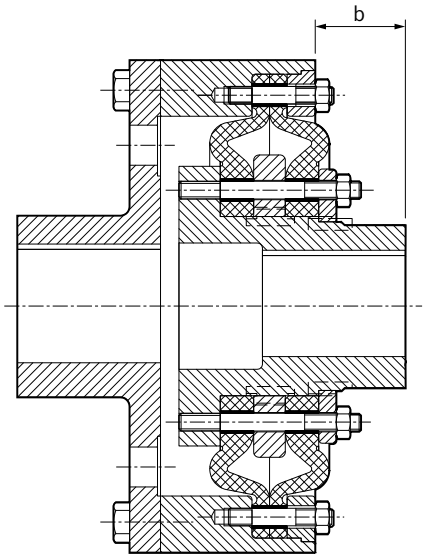

Figure 5-3: Reference dimension b for angular and axial misalignment

Sequence of alignment

Minimise the misalignments in the following sequence:

1. Angular misalignment (Page 27)
2. Radial misalignment (Page 28)
3. Axial misalignment (Page 28)

5.3.2.2 Angular misalignment

Procedure

1. Measure and record the dimension b at several points around the circumference as described in Description of the reference dimensions (Page 27).

2. Determine the maximum value b_{max} and the minimum value b_{min}.
3. Calculate the value $\Delta b = b_{max} - b_{min}$.
   The determined value Δb must not exceed the value Δb_{perm}.
4. If Δb exceeds the value Δb_{perm}, reduce the angular misalignment of the coupling and repeat the measurement.

You will find the values for Δb_{perm} in section Shaft misalignment values during operation (Page 57). The values for Δb_{perm} correspond to an angular misalignment ΔKw_{perm} of 0.2°.

5.3.2.3 Radial misalignment

Procedure

1. Measure and record the dimension a at several points around the circumference as described in Description of the reference dimensions (Page 27).
2. Determine the maximum value a_{max} and the minimum value a_{min}.
3. Calculate the value $\Delta Kr = (a_{max} - a_{min}) / 2$.
   The determined value ΔKr must not exceed the value ΔKr_{perm}.
   You will find the permissible radial misalignment ΔKr_{perm} in section Shaft misalignment values during operation (Page 57).
4. If ΔKr exceeds the value ΔKr_{perm}, reduce the radial misalignment of the coupling and repeat the measurement.

5.3.2.4 Axial misalignment

Procedure

1. Measure and record the dimension b at several points around the circumference as described in Description of the reference dimensions (Page 27).
2. Determine the maximum value b_{max} and the minimum value b_{min}.
   The value b_{max} must not exceed the value $b_{max\ perm} = b + \Delta Ka_{perm}$.
   The value b_{min} must not be below the value $b_{min\ perm} = b - \Delta Ka_{perm}$.
   You will find the values for $b_{max\ perm}$ and $b_{min\ perm}$ and the permissible axial misalignment ΔKa_{perm} in section Shaft misalignment values during operation (Page 57).
3. If b_{max} exceeds the value $b_{max\ perm}$, and/or b_{min} is below the value $b_{min\ perm}$, reduce the axial misalignment of the coupling and repeat the measurement.

Commissioning 6

In order to ensure safe commissioning, carry out various tests prior to commissioning.

Testing before commissioning

⚠ WARNING

Danger

Overload conditions can occur during the commissioning of the coupling. The coupling can burst and metal parts can be flung out. There is a risk of fatal injury from flying fragments.

- Carry out the tests prior to commissioning.
- Do not touch the rotating coupling.

1. Check the tightening torques of the screws of the coupling in accordance with section Tightening torques and widths A/F (Page 58).
2. Check the tightening torques of the foundation bolts of the coupled machines.
3. Check whether suitable enclosures (coupling guard, touch protection) have been installed and that the function of the coupling has not been adversely affected by the enclosure. This also applies to test runs and rotational direction checks.

Operation 7

7.1 Normal operation of the coupling

The coupling runs quietly and shock-free during normal operation.

7.2 Fault - causes and correction

A form of behaviour which is different to normal operation is classed as a fault and has to be rectified immediately.

Look out specifically for the following faults during coupling operation:

- Unusual coupling noise
- Sudden occurrence of shocks

7.2.1 Procedure in the event of malfunctions

⚠ WARNING

Danger due to bursting of the coupling

There is a risk of fatal injury from flying fragments.

- Switch off the unit at once if any malfunctions occur.
- Note during the maintenance work the possible causes of faults and the notes on rectifying them.

Proceed as described below if there is a malfunction of the coupling during operation:

1. De-energise the drive immediately.
2. Initiate the required action for repair, taking into consideration the applicable safety regulations.

If you cannot determine the cause or if you cannot carry out repair work with your own means, request one of our customer service technicians.

7.2.2 Identifying the fault cause

Faults occur frequently due to application errors or they occur due to operational circumstances such as wear of wearing parts or changes to the system.

The faults and fault causes listed below only serve as an indication for troubleshooting. In the case of a complex system be sure to include all the system components in the search for the fault.



⚠ WARNING

Physical injury

Injury from rotating parts.

- Only carry out work on the coupling when it is not moving.
- Secure the drive unit against being operated accidentally.
- Attach a notice to the switch stating clearly that work is being carried out on the coupling.
- Before starting any work, make sure that the unit is free from loads.

Intended use

The coupling is only approved for the applications specified in these instructions. Please observe all the stipulations in section Intended use (Page 16).

7.2.2.1 Possible faults

Fault	Cause	Rectification
Sudden changes in the noise level and/ or sudden occurrences of shocks	Wear of wearing parts	Follow the instructions given in section Replacing wearing parts (Page 34).
	Changed alignment	Follow the instructions given in section Correcting the changed alignment (Page 34).
	Coupling not suitable for the operating conditions. Check the possible causes given in section Unsuitable coupling (Page 33).	Use a coupling that is suitable for the operating conditions.
	Incorrect assembly of the coupling. Check the possible causes given in sections Assembly-related causes (Page 33) and Specific assembly-related and maintenance-related causes (Page 34).	Reassemble the coupling in accordance with these instructions. Please observe all the stipulations and requirements given in chapter Assembling (Page 23).
	Incorrect maintenance of the coupling. Check the possible causes given in sections Maintenance-related causes (Page 34) and Specific assembly-related and maintenance-related causes (Page 34).	Please observe all the stipulations and requirements given in chapter Maintenance (Page 37).
Presence of vibration	The dynamic properties of the flexible rings (5) have changed.	Replace the flexible rings (5).
	Coupling not suitable for the operating conditions. Check the possible causes given in section Unsuitable coupling (Page 33).	Use a coupling that is suitable for the operating conditions.

Fault	Cause	Rectification
Presence of vibration	Incorrect assembly of the coupling. Check the possible causes given in sections Assembly-related causes (Page 33) and Specific assembly-related and maintenance-related causes (Page 34).	Reassemble the coupling in accordance with these instructions. Please observe all the stipulations and requirements given in chapter Assembling (Page 23).
	Incorrect maintenance of the coupling. Check the possible causes given in sections Maintenance-related causes (Page 34) and Specific assembly-related and maintenance-related causes (Page 34).	Please observe all the stipulations and requirements given in chapter Maintenance (Page 37).

Table 7-1: Table of faults

7.2.2.2 Possible causes

7.2.2.2.1 Unsuitable coupling

- Important information on the description of the drive unit and the environment were not available when the coupling was chosen.
- System torque too high and/or torque dynamics not permissible.
- System speed too high.
- Application factor not selected correctly.
- Chemically aggressive environment not taken into consideration.
- Coupling not suitable for the ambient temperature.
- Diameter and/or assigned fit of the finished bore not permissible.
- Width across corners of the parallel keyways greater than the width across corners of the parallel keyways in accordance with DIN 6885/1 for the maximum permissible bore.
- Shaft-hub connection incorrectly sized.
- Maximum permissible load conditions not taken into consideration.
- Maximum permissible overload conditions not taken into consideration.
- Dynamic load conditions not taken into consideration.
- Coupling and the machine and/or drive train form a critical torsional, axial or bending vibration system.

7.2.2.2.2 Assembly-related causes

- Damaged parts installed.
- Shaft diameter outside the stipulated tolerance range.
- Coupling parts interchanged and hence not assigned to the specified shaft.
- Stipulated locking elements to prevent axial movements not installed.
- Stipulated tightening torques not adhered to.
- Screws inserted dry or greased.

- Flange surfaces of screw connections not cleaned.
- Alignment and/or shaft misalignment values not set in accordance with the instructions.
- Coupled machines were not correctly connected to the foundation so that a shifting of the machines leads to an impermissible displacement of the coupling parts.
- Coupled machines not earthed adequately.
- Coupling guard used is not suitable.

7.2.2.2.3 Maintenance-related causes

- Stipulated maintenance intervals not adhered to.
- Spare parts that were used were not original spare parts from Flender.
- Flender spare parts that were used were old or damaged.
- Leak in the area of the coupling not detected so that chemically aggressive substances damage the coupling.
- Indications of faults, such as noise or vibration, were not heeded.
- Stipulated tightening torques not adhered to.
- Alignment and/or shaft misalignment values not set in accordance with the instructions.

7.2.2.2.4 Specific assembly-related and maintenance-related causes

- ELPEX flexible rings (5) not correctly mounted.
- Non-matching sections of flexible rings (5) used.
- Fitted ELPEX flexible rings (5) heated up excessively when applying heat to the coupling parts.

7.2.3 Resolving faults

7.2.3.1 Replacing wearing parts

Flexible rings (5) are subject to wear. You can tell from the inner wear marks on the flexible ring (5) how far advanced the wear is.

Procedure

1. Check the wear on the flexible rings (5) (see Maximum permissible wear (Page 38)).
2. Replace the flexible rings (5) where appropriate (see Replacing wearing parts (Page 38)).

7.2.3.2 Correcting the changed alignment

A changed alignment of the coupling during operation often occurs when the coupled machines shift towards one another. A cause of this can be loose foundation bolts.

Procedure

1. Correct the cause for the change in alignment.

2. Check the wearing parts for wear and replace them as required.
3. Check the locking elements that prevent axial movements and correct these as required.
4. Realign the coupling.

Maintenance 8

8.1 Maintenance intervals

⚠ WARNING

Danger of injury due to bursting of the coupling

The coupling can burst if the maintenance intervals are not adhered to. There is a risk of fatal injury from flying fragments.

- Please observe all the stipulations concerning maintenance of the coupling in this section.

⚠ WARNING

Danger of injury due to bursting of the coupling

The coupling can burst if the maximum permitted torsional backlash is exceeded. There is a risk of fatal injury from flying fragments.

- Note also the actual wear of the elastomer components.



⚠ WARNING

Physical injury

Injury from rotating parts.

- Only carry out work on the coupling when it is not moving.
- Secure the drive unit against being operated accidentally.
- Attach a notice to the switch stating clearly that work is being carried out on the coupling.
- Before starting any work, make sure that the unit is free from loads.

Check the torsional misalignment between the coupling parts at the specified maintenance intervals. The maximum permissible torsional misalignment is listed in Section Maximum permissible wear (Page 38).

Type	Initial maintenance	Follow-up maintenance
ENG	3 months after commissioning	Every 12 months
ENGS		
EFG		
EFGS		

Table 8-1: Maintenance intervals

Shorter maintenance intervals

If necessary, set shorter maintenance intervals depending on actual wear.

Information

Cracks in the surface of the rubber

Cracks in the surface of the rubber on the ELPEX coupling have no effect on the life and function of the flexible rings (5).

8.2 Maximum permissible wear

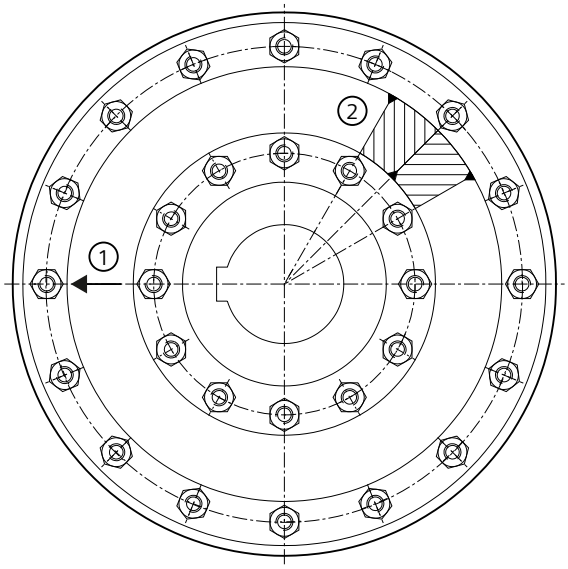

Figure 8-1: Wear inspection

① Arrow marking
② Wear marks

On each flexible ring (5), there are 3 wear marks, as shown in the figure. The two outer wear marks indicate the permissible circle sector in which the inner wear marks are permitted to be.

If the inner wear mark is outside the permissible circle sector, the coupling is no longer functional. Replace the flexible rings (5).

8.3 Replacing wearing parts

⚠ WARNING

Danger due to bursting of the coupling

If you do not observe the information stipulated here regarding replacement of wearing parts, this can lead to bursting of the coupling during operation. There is a risk of fatal injury from flying fragments.

- Please observe all the stipulations concerning the replacement of wearing parts.

If the maximum permissible torsional misalignment is reached, replace the two flexible rings (5).

Each flexible ring (5) is divided as follows:

- Up to size 690, the flexible ring (5) comprises 2 sections
- As from size 840, the flexible ring (5) comprises 4 sections

You can replace the flexible rings (5) without moving the coupled machines.

The flexible ring screw connection comprises parts 7, 8, 11 and 12. Depending on size, other components are assigned to the part numbers. This assignment is provided in the following table.

Size	Part number	Designation
Up to 690	7	Stud bolt
	8	Hexagon nut
	11	Stud bolt
	12	Hexagon nut
840	7	Bolt
	8	Hexagon head screw
	11	Stud bolt
	12	Hexagon nut
970	7	Bolt
	8	Hexagon head screw
	11	Hexagon head screw
	12	Parallel pin

Table 8-2: Flexible ring screw connection

Removing flexible rings (5)

1. On size 970, remove the parallel pins (12).
2. Remove the parts 8 and the parts 12 (size 970: parts 8 and parts 11) of the flexible ring screw connection.
3. Pull back the retaining rings (6) and (10) at least as far as the end of the hub.
4. Remove the first flexible ring (5).
5. Remove the following rings:
   Types ENG and EFG:
   – Remove the cylinder head screws (26) and remove the split retaining ring (17).
   – On sizes 840 and 970, pull the intermediate ring (4) up to the retaining rings (6) and (10).
   Types ENGS and EFGS:
   – Remove the cylinder head screws (27) and remove the split retaining ring (22).
   – Pull the stop ring (21) up to the retaining rings (6) and (10).
6. Remove the parallel keys (16 or 36).
7. Remove the second flexible ring (5).
8. Clean the space for holding the flexible rings (5).

9. Check the stud bolts of the flexible ring screw connection (up to size 690: parts 7 and parts 11; on size 840: parts 11) for firm seating. Remove the loosened stud bolts.
10. Clean parts 7, 8, 11 and 12 of the flexible ring screw connection. Allow the grease solvent to evaporate.
11. If you have removed stud bolts of the flexible ring screw connection (up to size 690: parts 7 and parts 11; on size 840: parts 11), apply a small quantity of the liquid screw locking agent (e.g. Loctite 243 medium strength) to the thread side of the stud bolt and screw the stud bolt in again using a suitable tool.

Installing new flexible rings (5)

Information

More difficult mounting due to replacement of the sections of the flexible rings (5) and incorrect installation of the two flexible rings (5)

- Each flexible ring (5) is split. Note the marking on the sections of the flexible rings (5). Sections that belong together have identical markings.
- When inserting the second flexible ring (5), make sure that the arrow marking on the first flexible ring (5) points to the same hole as the arrow marking of the second flexible ring (5) (see Maximum permissible wear (Page 38)).

1. Insert a new flexible ring (5).
   Please observe the information in section Use and storage of the flexible rings (5) (Page 60) when replacing the flexible rings (5).

Information

To make it easier to mount the flexible rings (5), you can apply glycerine to the contact surfaces.

2. Insert the parallel keys (16 or 36).
3. Mount the following rings:
   Types ENG and EFG:
   - On sizes 840 and 970, pull the intermediate ring (4) up to the flexible ring (5).
   - Insert the split retaining ring (17).
   - Screw the split retaining ring (17) with the cylinder head screws (26).
     Tighten the screws (26) with the specified tightening torque T_A (see Tightening torques and widths A/F for the parts 8, 12, 14, 26, 27 (Page 58)).

   Types ENGS and EFGS:
   - Pull the stop ring (21) up to the flexible ring (5).
   - Insert the split stop ring (22).

Information

Position of the split stop ring (22) relative to the stop ring (21)

The cams of the stop ring (21) must be centrally positioned between the cams of the split stop ring (22).

   - Screw the split retaining ring (22) with the cylinder head screws (27).

Tighten the screws (27) with the specified tightening torque T_A (see Tightening torques and widths A/F for the parts 8, 12, 14, 26, 27 (Page 58)).

4. Insert the second new flexible ring (5).
   When inserting the second flexible ring (5), make sure that the arrow marking on the first flexible ring (5) points to the same hole as the arrow marking of the second flexible ring (5) (see Maximum permissible wear (Page 38)).
5. Pull the retaining rings (6) and (10) up to the second flexible ring (5).
6. Insert the parallel pins (12) on size 970.
7. Screw/unscrew two parts 8 of the flexible ring screw connection by hand as much as possible relative to each other, approx. 180°.
8. Screw/unscrew the remaining parts 8 by hand.
9. Tighten all parts 8 by a quarter of a revolution one after the other by hand using a spanner. If the force to be applied becomes noticeably larger, the retaining ring (6) is firmly seated.
10. Tighten the parts 8 with the specified tightening torque T_A (see Tightening torques and widths A/F for the parts 8, 12, 14, 26, 27 (Page 58)).
11. Repeat steps 7 to 9 with parts 12 (size 970: parts 11) of the flexible ring screw connection, until the retaining ring (10) is firmly seated.
12. Tighten parts 12 (size 970: parts 11) with the specified tightening torque T_A (see Tightening torques and widths A/F for the parts 8, 12, 14, 26, 27 (Page 58)).
13. Knock in the parallel pins (12) on size 970.
14. Leave the coupling to settle for at least 24 hours before commissioning.

Locking the flexible ring screw connection

1. Tighten parts 8 and parts 12 (size 970: parts 8 and parts 11) of the flexible ring screw connection with the defined tightening torque T_A one after the other (see Tightening torques and widths A/F for the parts 8, 12, 14, 26, 27 (Page 58)).
2. Unscrew one part 8 or part 12 (size 970: part 8 or part 11).
3. Apply a small quantity of liquid screw locking agent (e.g. Loctite 243 threadlocker medium strength) to the thread.
4. Tighten the part 8 or part 12 (size 970: part 8 or part 11) with the specified tightening torque T_A (see Tightening torques and widths A/F for the parts 8, 12, 14, 26, 27 (Page 58)).
5. Repeat steps 2 to 4 with all parts 8 and parts 12 (size 970: part 8 and part 11).

8.4 Removing coupling part 1 (1) or 2 (2)



⚠ WARNING

Danger from burners and hot coupling parts

Risk of injury due to burners and hot surfaces.

- Wear suitable protective equipment (gloves, safety goggles).

Procedure

1. Secure the coupling parts to prevent them from falling.
2. On types ENG and ENGS, remove the hexagon head screws (14) and the parallel pins (13) or, on types EFG and EFGS, the screw connection of the coupling part 3 (3) or 30 (30) to the mating part.
3. Move the coupled machines apart.
4. Remove the hexagon nuts (8) or hexagon head screws (8).
5. Pull back the retaining ring (6) at least as far as the end of the hub.
6. Pull the flexible rings (5) with the screwed-on coupling ring (9 or 19) or the coupling part 3 (3) or 30 (30) from the coupling part 2 (2) and push it onto the shaft.
7. Remove the axial locking elements (set screw, end plate).
8. Use a suitable pulling fixture.
9. Heat up the coupling part 1 (1) or 2 (2) using a burner above the parallel keyway along its length to maximum 80 °C.
10. Pull off the coupling part 1 (1) or (2). Use suitable lifting gear when doing this.
    If necessary, remove the flexible rings (5) as described in section Replacing wearing parts (Page 38).
11. Check the hub bore and the shaft for damage and protect them against corrosion.
12. Replace any damaged parts.

When reinstalling the coupling parts please observe the information in chapters Assembling (Page 23) and Commissioning (Page 29).

Service and support 9

9.1 Contact

When ordering replacement parts, requesting a customer service technician or if you have any technical queries, contact our factory or one of our Customer Service addresses:

Flender GmbH

Schlavenhorst 100

46395 Bocholt

Germany

Tel.: +49 (0)2871/92-0

Fax.: +49 (0)2871/92-2596

Flender GmbH (http://www.flender.com/)

More information

Further information about service and support can be found on the Internet:

Service & Support (https://www.flender.com/service)

Disposal

10

Disposal of the coupling

Dispose of the coupling parts according to applicable national regulations or recycle them.

Spare parts 11

11.1 Ordering spare parts

By stocking the most important replacement parts at the installation site you can ensure that the coupling is ready for use at any time.

Please only ever use original replacement parts from Flender. Flender only accepts liability for original replacement parts from Flender.

You can find the available replacement parts for the coupling described here at Spare parts drawing and spare parts list (Page 48).

You can find our contact data for ordering replacement parts here Service and support (Page 43).

Information required when ordering replacement parts

- Flender order number with item
- Flender drawing number
- Coupling type and size
- Part number (refer to Spare parts drawing and spare parts list (Page 48))
- Dimensions of the replacement part, for example:
  - Bore
  - Bore tolerance
  - Parallel keyway and balancing
- Special dimensions, for example, flange connection dimensions, intermediate sleeve length or brake drum dimensions
- Any special properties of the replacement part, such as, for example:
  - Temperature resistance
  - Electrical insulation
  - Operating fluid
  - Use in potentially explosive atmospheres
- Quantity

11.2 Spare parts drawing and spare parts list

11.2.1 Spare parts drawing for types ENG and ENGS

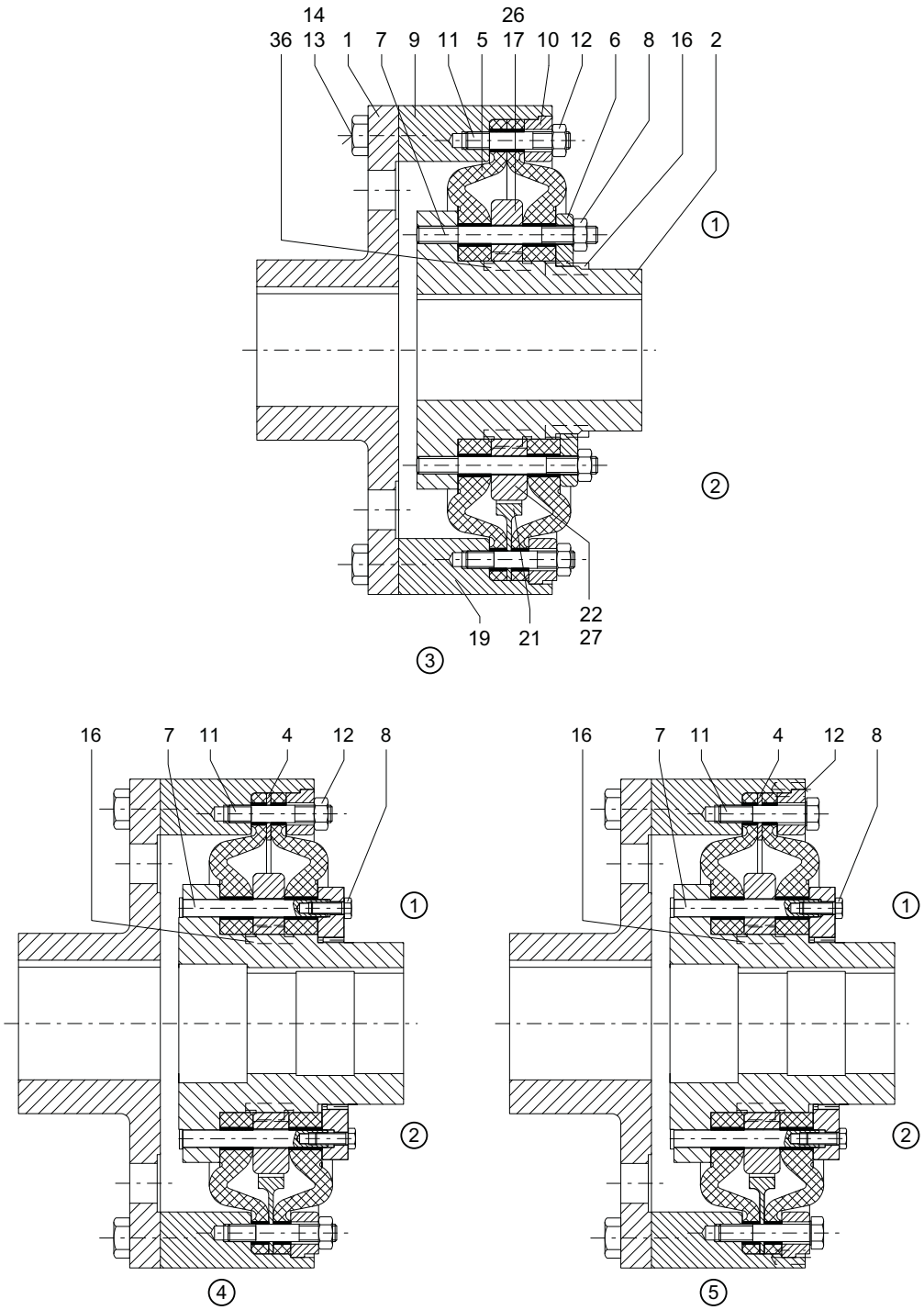

Figure 11-1: Spare parts drawing for types ENG and ENGS

① Type ENG
② Type ENGS
③ Sizes 270 to 690
④ Size 840
⑤ Size 970

11.2.2 Spare parts drawing for types EFG and EFGS

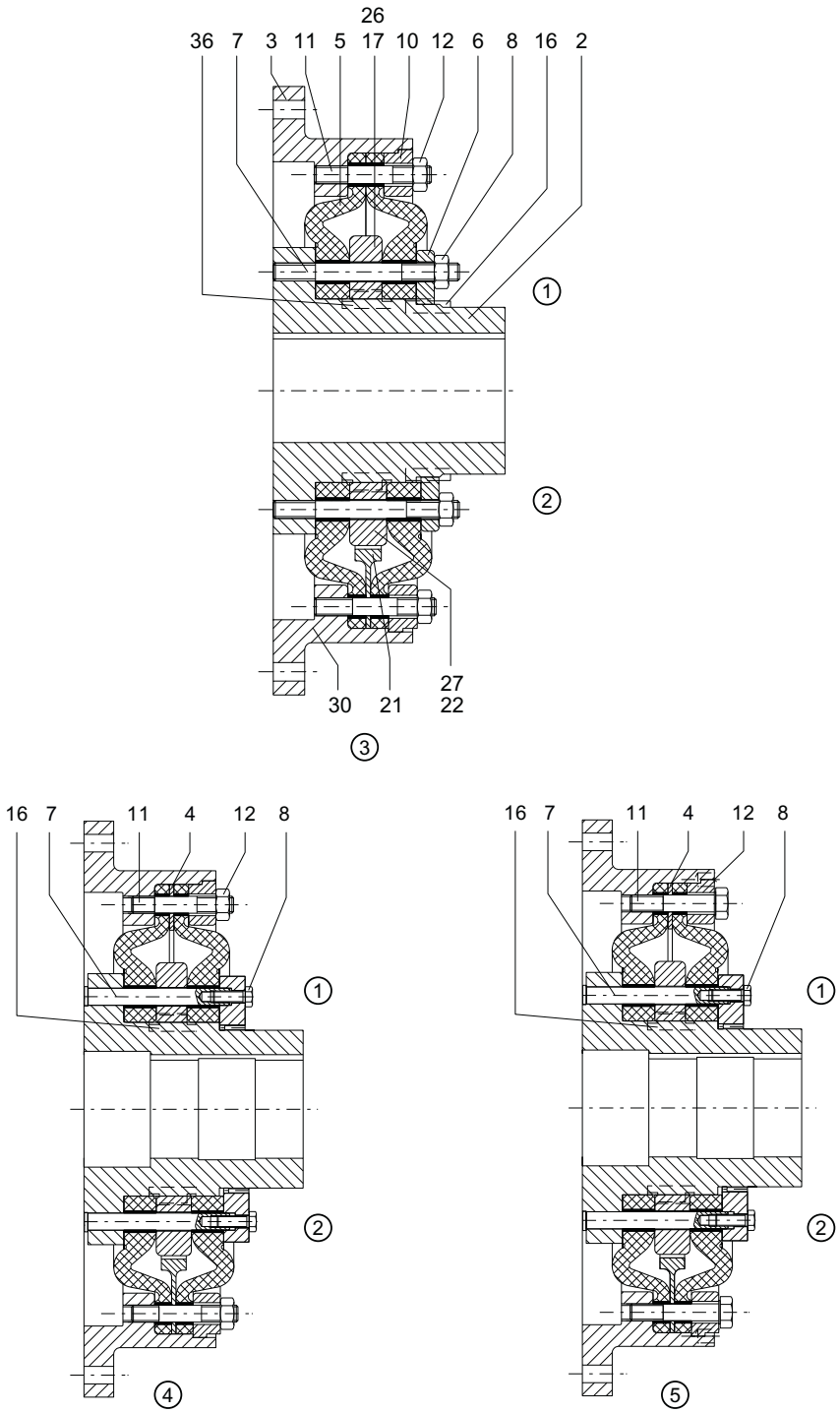

Figure 11-2: Spare parts drawing for types EFG and EFGS

① Type EFG
② Type EFGS
③ Sizes 270 to 690
④ Size 840
⑤ Size 970

11.2.3 Spare parts list for types ENG, ENGS and EFG, EFGS

Part number	Designation	ENG	ENGS	EFG	EFGS
1	Coupling part 1	x	x		
2	Coupling part 2	x	x	x	x
3	Coupling part 3			x	
4	Intermediate ring[1)]	x		x	
5	Flexible ring	x	x	x	x
6	Retaining ring	x	x	x	x
7	Stud bolt / bolt[2)]	x	x	x	x
8	Hexagon nut / hexagon head screw[2)]	x	x	x	x
9	Coupling ring	x			
10	Retaining ring	x	x	x	x
11	Stud bolt / hexagon head screw[3)]	x	x	x	x
12	Hexagon nut / parallel pin[3)]	x	x	x	x
13	Parallel pin	x	x		
14	Hexagon head screw	x	x		
16	Parallel key[4)]	x	x	x	x
17	Split retaining ring	x		x	
19	Coupling ring		x		
21	Stop ring		x		x
22	Split stop ring		x		x
26	Cylinder head screw	x		x	
27	Cylinder head screw		x		x
30	Coupling part 30				x
36	Parallel key[4)]	x	x	x	x

Table 11-1: Spare parts list for types ENG, ENGS and EFG, EFGS

[1)] Only available for sizes 840 and 970 of types ENG and EFG.

[2)] Up to size 690: stud bolts (7) and hexagon nuts (8)
sizes 840 and 970: bolts (7) and hexagon head screws (8)

[3)] Up to size 840: stud bolts (11) and hexagon nuts (12)
size 970: hexagon head screws (11) and parallel pins (12)

[4)] Up to size 690: parallel key (16) and parallel key (36)
sizes 840 and 970: parallel key (16)

Technical data

A

A.1 Geometry data and weights

In this section, you can find dimension drawings and technical data for ELPEX couplings of the following types:

- Types ENG and ENGS, dimension drawing (Page 53) and technical data (Page 54)
- Types EFG and EFGS, dimension drawing (Page 55) and technical data (Page 55)
- Connection dimensions at the coupling ring (9 or 19) (Page 56)

A.1.1 Dimension drawing of type ENG and ENGS

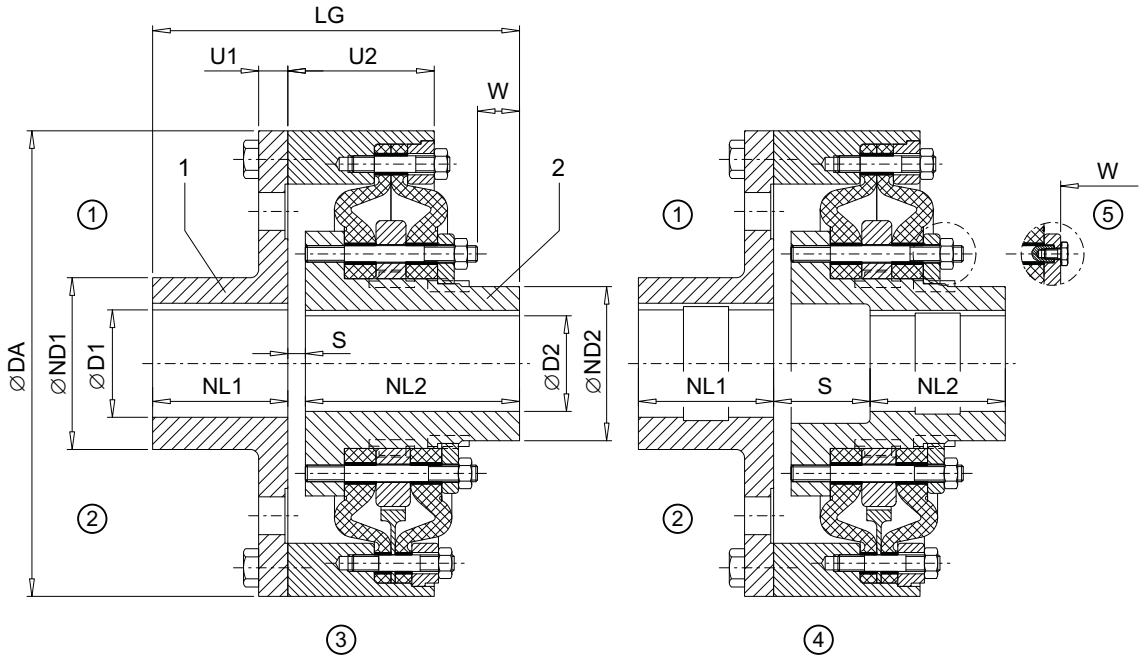

Figure A-1: Types ENG and ENGS

① Type ENG
② Type ENGS
③ Sizes 270 to 430
④ Sizes 500 to 970
⑤ Screw connection and dimension W for sizes 840 and 970

A.1.2 Technical data of types ENG and ENGS

Size	Speed $n_{max.}$		Maximum bore[1]				DA	ND1	ND2	NL1	NL2	S	U1	U2	LG	W	Weight[2]
			D1		D2												
	Cast iron rpm	Steel rpm	from mm	to mm	from mm	to mm	mm	mm	mm	mm	mm	mm	mm	mm	mm	mm	m kg
270	3 000	4 250	45	80	45	70	270	128	94	80	155	10	14	86	245	42	29
320	2 500	3 600	55	100	55	85	320	160	115	100	180	6	16	97.5	286	48	50
375	2 100	3 100	65	115	65	105	375	184	143	120	205	10	18	111.8	335	62	80
430	1 900	2 650	75	130	75	120	430	208	165	140	235	8	22	126	383	68	113
500	1 600	2 300	90	150	90	150	500	240	202	160	160	112	25	139.7	432	80	174
590	1 360	2 000	100	140	100	170	590	224	230	190	190	130	28	162.7	510	95	254
			140	180				288									284
690	1 200	1 650	110	140	110	200	690	224	278	220	220	140	32	175.6	580	102	350
			140	180				288									370
			180	210				336									385
840	1 000	1 350	140	180	140	240	840	288	340	280	280	125	42	231	685	105	700
			180	220				352									725
970	850	1 180	160	200	160	280	970	320	390	350	350	167	70	290	867	137	1 265
			200	240				384									1 310
			240	280				448									1 350
			280	320				512									1 410

Table A-1: Speeds, geometry data and weights of types ENG and ENGS

[1] Maximum bore for parallel keyway in accordance with DIN 6885/1

[2] Weight applies to one coupling of type ENG or cast-iron version with maximum bore

A.1.3 Dimension drawing of type EFG and EFGS

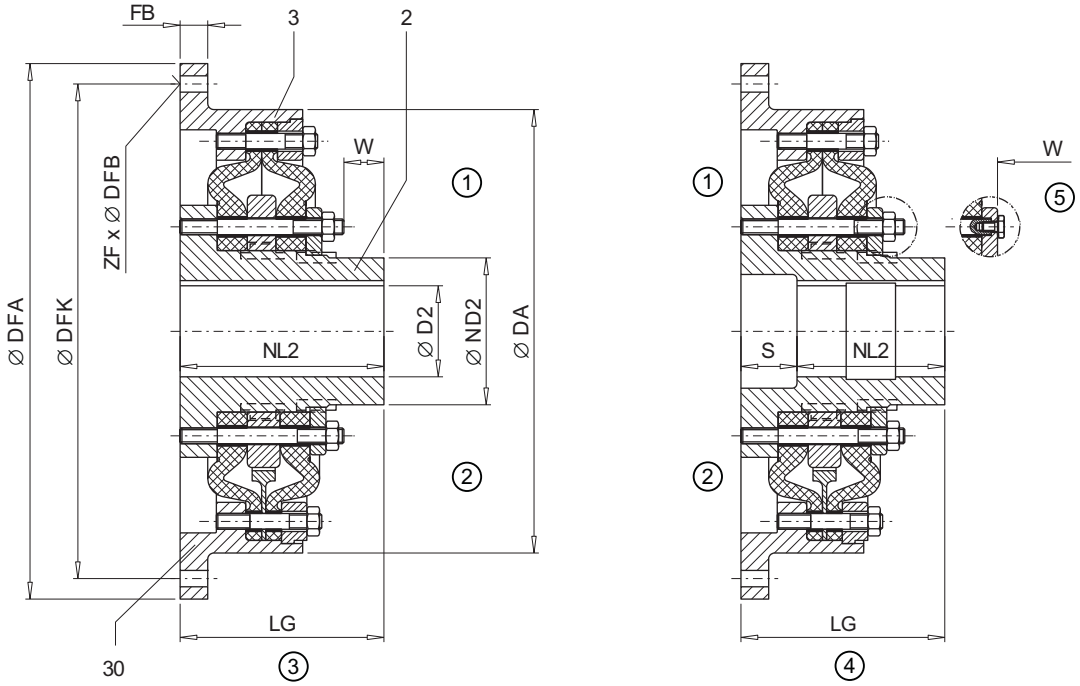

Figure A-2: Types EFG and EFGS

① Type EFG
② Type EFGS
③ Sizes 270 to 430
④ Sizes 500 to 970
⑤ Screw connection and dimension W for sizes 840 and 970

A.1.4 Technical data of types EFG and EFGS

Size	Speed		Maximum bore D2 [1]		DA	ND2	NL2	S	LG	W	Flanged connection dimensions [2]					Weight m [3]
	$n_{max.}$										DFA	DFK	FB	ZF	DFB	
	Cast iron rpm	Steel rpm	from mm	to mm	mm	mm	mm	mm	mm	mm	mm	mm	mm		mm	kg
270	3 000	4 250	45	70	270	94	155	-	155	42	466.7 g7 [2]	438.2 [2]	12	8	13	27
											325 j6	300		8	14	19
320	2 500	3 600	55	85	320	115	180	-	180	48	517.5 g7 [2]	489 [2]	14	8	13	42
											392 j6	360		8	18	33.5
375	2 100	3 100	65	105	375	143	205	-	205	62	571.5 g7 [2]	542.9 [2]	16	6	17	65
											448 j6	415		8	18	53

Size	Speed		Maximum bore D2 [1]		DA	ND2	NL2	S	LG	W	Flanged connection dimensions [2]					Weight m [3]
	$n_{max.}$										DFA	DFK	FB	ZF	DFB	
	Cast iron rpm	Steel rpm	from mm	to mm	mm	mm	mm	mm	mm	mm	mm	mm	mm		mm	kg
430	1 900	2 650	75	120	430	165	235	-	235	68	673.1 g7 [2]	641.4 [2]	20	12	17	100
											515 j6	475		8	22	78
500	1 600	2 300	90	150	500	202	160	100	260	80	673.1 g7 [2]	641.4 [2]	20	12	17	150
											585 j6	545		10	22	140
590	1 350	2 000	100	170	590	230	190	120	310	95	733.4 g7 [2]	692.2 [2]	24	12	21	200
											692 j6	645		10	26	190
690	1 200	1 650	110	200	690	278	220	130	350	102	890 g7 [2]	850 [2]	24	32	17	270
											800 j6	750		12	26	250
840	1 000	1 350	140	240	840	340	280	115	395	105	1105 g7 [2]	1060 [2]	30	32	21	530
											960 j6	908		16	30	470
970	850	1 180	160	280	970	390	350	155	505	137	1385 g7 [2]	1320 [2]	35	24	31	1050
											1112 j6	1051		16	35	920

Table A-2: Speeds, geometry data and weights of types EFG and EFGS

[1] Maximum bore for parallel keyway in accordance with DIN 6885/1

[2] The values in the upper line of the flanged connection dimensions comply with the standard SAE J620d or standard DIN 6288

[3] Weight applies to one coupling of type EFG or cast-iron version with maximum bore

A.1.5 Connection dimensions at the coupling ring (9 or 19)

If you use a coupling of types ENG or ENGS without coupling part 1 (1), you can screw on the flanges, brake disks etc. directly to the coupling ring (9 or 19).

Information

Notes for screwing on the coupling ring (9 or 19).

- Use screws of strength class 8.8 or higher.
- Dimension the depth of engagement of the screws adequately (the following applies to steel materials: depth of engagement ≥ 1.5 · thread diameter).
- Select the tightening torque according to Directive VDI 2230.
- Check the dimensioning of the screw connection.
- This screw connection is the responsibility of the customer. Flender Shall have no liability whatsoever for claims under warranty arising from an inadequately dimensioned screw connection.

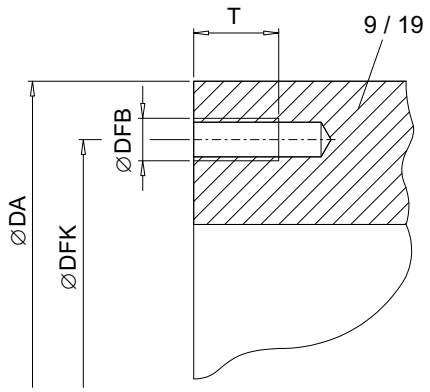

Figure A-3: Connection dimensions at the coupling ring (9 or 19)

Size	DA h8 mm	DFK mm	DFB	T mm	Qty. Tapped holes
270	270	244	M12	18	8
320	320	288	M16	24	8
375	375	342	M16	24	8
430	430	390	M20	30	8
500	500	460	M20	30	10
590	590	542	M24	36	10
690	690	642	M24	36	12
840	840	780	M30	46	12
970	970	880	M36	53	15

Table A-3: Connection dimensions at the coupling ring (9 or 19)

A.2 Shaft misalignment values during operation

The following table shows the maximum permissible shaft misalignment values ΔS_{perm} and ΔKr_{perm}. The values are rounded and specified in mm.

Size	Maximum permissible shaft misalignment							Reference dimension b
	Radial		Angular		Axial			
	ΔKr_{perm} continuously mm	$\Delta Kr_{max\ perm}$ [1)] for brief periods mm	ΔKw_{perm} Degrees	Δb_{perm} mm	ΔKa_{perm} mm	$b_{min\ perm}$ b – ΔKa mm	$b_{max\ perm}$ b + ΔKa mm	mm
270	2.2	4.5	0.2	0.9	2.2	76.8	81.2	79.0
320	2.6	5.0	0.2	1.1	2.6	85.9	91.1	88.5
375	3.0	6.0	0.2	1.3	3.0	100.2	106.2	103.2
430	3.4	7.0	0.2	1.5	3.4	113.6	120.4	117.0
500	3.8	7.5	0.2	1.7	3.8	128.5	136.1	132.3
590	4.2	8.5	0.2	2.0	4.2	153.1	161.5	157.3

Size	Maximum permissible shaft misalignment							Reference dimension b
	Radial		Angular		Axial			
	ΔKr_{perm} continuously mm	$\Delta Kr_{max\ perm}$ [1] for brief periods mm	ΔKw_{perm} Degrees	Δb_{perm} mm	ΔKa_{perm} mm	$b_{min\ perm}$ b – ΔKa mm	$b_{max\ perm}$ b + ΔKa mm	mm
690	4.6	9	0.2	2.4	4.6	179.8	189.0	184.4
840	5.0	10	0.2	2.9	5.0	169	179	174
970	5.5	11	0.2	3.4	5.5	221.5	232.5	227

Table A-4: Maximum permissible shaft misalignment values during operation

[1] e.g. for start-up or switch-off processes

A.3 Tightening torques and widths A/F

A.3.1 Tightening torques and widths A/F for the parts 8, 12, 14, 26, 27

Size	Tightening torque T_A and width A/F SW									
	Hexagon head screw						Hexagon socket wrench			
	Part 8		Part 12[1]		Part 14		Part 26		Part 27	
	T_A Nm	SW mm	T_A Nm	SW mm	T_A Nm	SW mm	T_A Nm	SW mm	T_A Nm	SW mm
270	35	17	18	13	86	19	25	6	49	8
320	35	17	35	17	210	24	25	6	49	8
375	55	19	55	19	210	24	49	8	86	10
430	55	19	55	19	410	30	86	10	210	14
500	130	24	55	19	410	30	86	10	210	14
590	130	24	130	24	710	36	210	14	410	17
690	250	30	130	24	710	36	210	14	710	19
840	250	30	250	30	1 450	46	710	19	710	19
970	435	36	435[1]	36	2 530	55	1 450	22	1 450	22

Table A-5: Tightening torques and widths A/F for the parts 8, 12, 14, 26, 27

[1] For size 970, part 12 is a parallel pin. The tightening torque applies to part 11 on size 970.

Apply the specified tightening torques as listed in section Tightening procedure (Page 60).

A.3.2 Tightening torques and widths A/F for the screw connection of coupling part 3 (3) or 30 (30) to the mating part

Size	Flanged connection dimension DFA mm	Metric screw		Inch screw	
		Screw size	Tightening torque T_A Nm	Screw size	Tightening torque T_A Nm
270	466.7 [1]	M12	86	1/2-13	102
	325	M12	86		
320	517.5 [1]	M12	86	1/2-13	102
	392	M16	210		
375	571.5 [1]	M16	210	5/8-11	203
	448	M16	210		
430	673.1 [1]	M16	210	5/8-11	203
	515	M20	410		
500	673.1 [1]	M16	210	5/8-11	203
	585	M20	410		
590	733.4 [1]	M20	410	3/4-10	340
	692	M24	710		
690	890 [1]	M16	210	5/8-11	203
	800	M24	710		
840	1 105 [1]	M20	410	3/4-10	340
	960	M27	1 050		
970	1 385 [1]	M30	1 450	1 1/8-7	1 050
	1112	M30	1 450		

Table A-6: Tightening torques and widths A/F for the screw connection of coupling part 3 (3) or 30 (30) to the mating part

1) Flanged connection dimension according to standard SAE J620d or the standard DIN 6288

For a description of the flanged connection dimension DFA, see Dimension drawing of type EFG and EFGS (Page 55).

Apply the specified tightening torques as listed in section Tightening procedure (Page 60).

A.3.3 Tightening torques and widths A/F for set screws

Tapped hole d_1	Tightening torque T_A Nm	Width across flats Hexagon socket wrench mm
M5	3	2.5
M6	4	3
M8	8	4
M10	15	5
M12	25	6

Tapped hole d_1	Tightening torque T_A Nm	Width across flats Hexagon socket wrench mm
M16	70	8
M20	130	10
M24	230	12
M30	470	14

Table A-7: Tightening torques and widths A/F for set screws

Apply the specified tightening torques as listed in section Tightening procedure (Page 60).

A.4 Tightening procedure

Adhere to tightening torques taking into account the following table:

Scatter of the torque applied at the tool	Tightening procedure (As a rule, the tightening procedures listed are within the specified tool torque scatter)
±5 %	• Hydraulic tightening with mechanical screwdriver • Torque-controlled tightening with a torque spanner or a torque spanner that gives a signal • Tightening with a precision mechanical screwdriver with dynamic torque measurement

Table A-8: Tightening procedure

The tightening torques apply to screws/bolts with untreated surfaces that are not oiled or are only lightly oiled, and for screws/bolts that are used with a liquid screw locking agent in accordance with these instructions. Use with lubricant paint or lubricant is not permitted.

A.5 Flexible rings (5)

A.5.1 Use and storage of the flexible rings (5)

Note the following concerning the use and storage of the flexible rings (5):

- Storage possible for up to 5 years
- Protect against direct sunlight, artificial light with a high UV content and extreme temperatures
- Avoid contact with aggressive media
- Store flat with the bulge facing upwards
- Use only matching sections of the flexible rings (5). Sections that belong together have identical markings.

A.5.2 ELPEX flexible rings (5)

Material	Hardness	Marking	Ambient temperature
Natural rubber with vulcanised double-thread inlay	70 Shore A	Size	-40 °C to +80 °C

Table A-9: ELPEX flexible rings

Two flexible rings (5) are mounted in each coupling. Each flexible ring (5) is divided as follows:

- Up to size 690, the flexible ring (5) comprises 2 sections
- As from size 840, the flexible ring (5) comprises 4 sections

FLENDER COUPLINGS

ELPEX
Assembly and operating instructions M3300-01en
Edition 09/2022

Flender GmbH
Alfred-Flender-Straße 77
46395 Bocholt
Germany

FLENDER