FLENDER GEAR UNITS

Gear unit

Assembly and operating instructions B5031-01en
Edition 07/2022

H.SV, H.VV, H.HV, H.KV, H.DV, H.FV B.SV, B.VV, B.HV, B.KV, B.DV, B.FV

1...22



flender.com

FLENDER

Original assembly and operating instructions

B5031-01
Edition 07/2022

Copyright (©2022 Flender GmbH)

V4
12/08/2022
13:30:39

Table of contents

1 Introduction 13

1.1 Legal information 13

1.2 General information 14

1.3 Lubricants 16

2 Safety instructions 17

2.1 The five safety rules 17

2.2 General information 17

2.3 General warnings and symbols 19

2.4 Special types of danger and personal protective equipment 19

2.5 Intended use in potentially explosive atmosphere 22

3 Description 25

3.1 General description 25

3.2 Output shaft versions 26

3.3 Housing 26

3.4 Oil supply of the gear unit 29

3.4.1 Splash lubrication 29

3.5 Bearing arrangement of the shafts 30

3.6 Shaft seal 30

3.6.1 Rotary shaft sealing rings 30

3.6.2 Dry-running protection 30

3.6.3 Taconite seal 31

3.6.4 Centrifugal disk 34

3.7 Backstop 34

3.8 Cooling 36

3.8.1 Fan 36

3.8.2 Cooling coil 37

3.8.3 Mounted oil supply system 39

3.8.3.1 Mounted oil supply system with air-oil cooler 39

3.8.3.2 Mounted oil supply system with water-oil cooler 41

3.8.3.3 Pump 43

3.8.3.4 Oil filter 43

3.8.4 Separate oil supply system 43

3.9 Couplings 43
3.10 Shrink disk 44
3.11 Heating 44
3.12 Oil level indicator 46
3.13 Oil level monitoring system 46
3.14 Oil temperature monitoring 47
3.15 Bearing monitoring 48
3.15.1 Bearing monitoring using a Pt 100 resistance thermometer 48
3.15.2 Bearing monitoring by shock-pulse transducer 48
3.15.3 Bearing monitoring by acceleration sensor 49
3.16 Auxiliary drive 49
3.16.1 Overrunning clutch 51

4 Application planning 53

4.1 Scope of delivery 53
4.2 Transport 53
4.3 Attachment points 55

5 Assembly 59

5.1 General assembly instructions 59
5.2 Unpacking the gear unit 60
5.3 Gear unit assembly 61
5.3.1 Foundation 61
5.3.2 Description of assembly work 62
5.3.2.1 Introduction 62
5.3.2.2 Alignment 64
5.3.3 Gear unit assembly on housing foot 65
5.3.3.1 Installation on a foundation frame 65
5.3.3.2 Mounting on a concrete foundation using stone bolts or foundation blocks 66
5.3.3.3 Mounting on a concrete foundation using anchor bolts 69
5.3.4 Mounting on a mounting flange or block flange 71
5.3.4.1 Mating flange on the machine side 71
5.3.4.2 Assembly 72
5.3.4.2.1 Gear units with solid shaft on the output side 74
5.3.4.2.2 Gear units with a hollow shaft on the output side 74
5.3.4.3 Dismantling 75
5.3.5 Mounting the torque arm for the gear unit housing 75
5.3.5.1 Mounting the torque arm 75
5.3.5.2 Mounting the torque arm 75

5.4 Shaft-mounted gear unit with hollow shaft 77
5.4.1 Shaft-mounted gear unit with hollow shaft and parallel keyway 77
5.4.1.1 Preparations 77
5.4.1.2 Assembly 78
5.4.1.2.1 Mounting 78
5.4.1.2.2 Axial locking 79
5.4.1.3 Dismantling 80
5.4.2 Shaft-mounted gear unit with hollow shaft and spline according to DIN 5480 84
5.4.2.1 Preparations 84
5.4.2.2 Assembly 85
5.4.2.2.1 Pulling on with integrated DU bushing 85
5.4.2.2.2 Mounting with DU bushing as a separate component 87
5.4.2.2.3 Axial locking 87
5.4.2.3 Dismantling 88
5.4.3 Shaft-mounted gear unit with hollow shaft and shrink disk 91
5.4.3.1 Assembly 91
5.4.3.1.1 Pulling on with integrated DU bushing 92
5.4.3.1.2 Mounting with DU bushing as a separate component 94
5.4.3.1.3 Axial locking 94
5.4.3.2 Dismantling 94

5.5 Gear unit with type F flange shaft 95
5.5.1 Requirements 95
5.5.2 Installing the gear unit 95

5.6 Couplings 96

5.7 Connecting components 98
5.7.1 Gear units with mounted components 98
5.7.2 Making terminal box connections for pre-wired gear units 98
5.7.3 Connecting the cooling coil 98
5.7.4 Connecting the air-oil cooler 99
5.7.5 Connecting the water-oil cooler 99
5.7.6 Connecting the heating element 100
5.7.7 Connecting the pressure monitor 101
5.7.8 Installing a separate oil supply system 101
5.7.9 Connecting the oil level monitoring system 101
5.7.10 Connecting the Pt 100 resistance thermometer 102
5.7.11 Connecting the temperature monitor 102
5.7.12 Connecting the bearing monitoring system 102
5.7.13 Connecting the motor pump 103
5.7.14 Electrical connections 103

5.8 Tightening procedure 104
5.8.1 Introduction 104
5.8.2 Bolt connection classes 104

5.8.3 Tightening torques and preload forces 105
5.9 Final work 107

6 Commissioning 109

6.1 Measures prior to commissioning 109
6.1.1 Gear unit with backstop 109
6.1.2 Gear unit with auxiliary drive 110
6.1.3 Oil level monitoring system 111
6.1.4 Gear units with cooling coil 111
6.1.5 Gear unit with heating 111
6.1.6 Gear units with oil supply system 112
6.1.7 Filling lubricant into gear units with mounted backstop or auxiliary drive 113
6.2 Measures during commissioning 113

7 Operation 115

7.1 Operating data 115
7.2 Irregularities in operation 116
7.3 Taking the unit out of service 117

8 Servicing 119

8.1 General maintenance information 119
8.2 Maintenance schedule 119
8.3 Maintenance and servicing work 121
8.3.1 Checking the oil temperature 121
8.3.2 Filling the backstop with oil 122
8.3.3 Replacing the backstop 122
8.3.4 Filling the overrunning clutch of the auxiliary drive with oil 122
8.3.5 Checking the auxiliary drive 123
8.3.6 Cleaning the fan and gear unit 123
8.3.7 Checking the cooling coil 124
8.3.8 Inspecting the shrink disk 124
8.3.9 Cleaning the coarse filter 125
8.3.10 Cleaning the double change-over filter 125
8.3.11 Checking the speed monitoring of the auxiliary drive 126
8.3.12 Measuring the vibration levels of the rolling-contact bearings 126
8.3.13 Measuring the temperature at the rolling-contact bearings 126
8.3.14 Checking the ignition protection system 127
8.3.15 Check that all of the fastening bolts are tight 127
8.3.16 General inspection of the gear unit 127
8.3.17 Final work 127
8.4 Possible faults 128

9 Service & Support 133

9.1 Contact 133

10 Disposal 135

11 Spare parts 137

A Declaration of incorporation 139

A.1 Declaration of Incorporation 139

B Declaration of conformity 141

B.1 EU Declaration of Conformity 141

C Technical data 143

C.1 General technical data 143

C.2 Ambient temperature 145

C.3 Types 146

C.4 Weights 147

C.5 Oil quantities 147

C.6 Enveloping surface sound pressure level 148

Index 157

List of tables

Table 2-1	Symbols and markings	18
Table 2-2	General warnings	19
Table 3-1	Designs and associated directions of rotation	25
Table 3-2	Taconite seal versions	33
Table 3-3	Required cooling water flow rate	38
Table 3-4	Information about the specific heat output	45
Table 5-1	Motor assignment for housing support	76
Table 5-2	Dimensions for the threaded holes at the face sides of standard gear unit hollow shafts	83
Table 5-3	Maximum forcing pressures	83
Table 5-4	Maximum forcing pressures	90
Table 5-5	Tightening torques at the flange connections	96
Table 5-6	Information on tightening fastening bolts	104
Table 5-7	Preload forces and tightening torques	105
Table 7-1	Operating data for temperature class T4 and/or maximum surface temperature 120 °C	115
Table 7-2	Operating data for temperature classes T1, T2, T3 and/or maximum surface temperature 150 °C, 200 °C	115
Table 8-1	Maintenance and servicing activities	119
Table 8-2	Possible faults and their rectification	128
Table C-1	Explosion protection marking	144
Table C-2	Weights	147
Table C-3	Weights	147
Table C-4	Oil quantities	147
Table C-5	Enveloping surface sound pressure level	148
Table C-6	Enveloping surface sound pressure level	149
Table C-7	Enveloping surface sound pressure level	150
Table C-8	Enveloping surface sound pressure level	151
Table C-9	Enveloping surface sound pressure level	152

Table C-10 Enveloping surface sound pressure level 153

Table C-11 Enveloping surface sound pressure level 154

Table C-12 Enveloping surface sound pressure level 155

List of figures

Figure 3-1 Output shaft versions 26

Figure 3-2 Plate: Lubrication point 27

Figure 3-3 Gear unit equipment on type H..V gear units with oil expansion unit 27

Figure 3-4 Gear unit equipment on type H..V gear units with oil expansion unit and oil cooling system pump 28

Figure 3-5 Gear unit components for model B..V gear units with oil expansion unit 28

Figure 3-6 Gear unit components for model B..V gear units with oil expansion unit and oil cooling system pump 29

Figure 3-7 Rotary shaft sealing ring 30

Figure 3-8 Dry-running protection 31

Figure 3-9 Taconite seal 32

Figure 3-10 Design variants of taconite seals 33

Figure 3-11 Centrifugal disk 34

Figure 3-12 Backstop 35

Figure 3-13 Fan 37

Figure 3-14 Cooling coil connections 38

Figure 3-15 Oil supply system with air-oil cooler mounted on type B..V gear units 40

Figure 3-16 Oil supply system with air-oil cooler mounted on type H..V gear units 40

Figure 3-17 Oil supply system with water-oil cooler mounted on type H..V gear units 42

Figure 3-18 Oil supply system with water-oil cooler mounted on type B..V gear units 42

Figure 3-19 Heating system on type H..V and B..V gear units 45

Figure 3-20 Oil temperature monitoring system for type H..V and B..V gear units 47

Figure 3-21 Measuring nipple 49

Figure 3-22 Fundamental design of gear unit with main and auxiliary drives 50

Figure 3-23 Gear unit version 51

Figure 4-1 Transport symbols 55

Figure 4-2 Shear and lateral pulling when using eye bolts 56

Figure 4-3 Position of the attachment points on type H..V and B..V gear units 56

Figure 4-4 Position of the attachment points on type H..V gear units with motor 57
Figure 4-5 Position of the attachment points on type B..V gear units with motor 57
Figure 4-6 Position of the attachment points on type H..V gear units in a piggyback configuration 58
Figure 5-1 Gap dimension at grease labyrinth 63
Figure 5-2 Alignment surface 64
Figure 5-3 Alignment surfaces 65
Figure 5-4 Stone bolt 67
Figure 5-5 Foundation block 68
Figure 5-6 Inserted anchor bolt 69
Figure 5-7 Tightened anchor bolt 70
Figure 5-8 Gear units with solid shaft on the output side 74
Figure 5-9 Gear units with a hollow shaft on the output side 74
Figure 5-10 Torque arm for the gear unit housing 76
Figure 5-11 Gear unit with a hollow shaft and parallel keyway 77
Figure 5-12 Mounting process with screw spindle 79
Figure 5-13 Dismantling using an end plate 81
Figure 5-14 Dismantling using hydraulic pulling equipment 82
Figure 5-15 Hollow shaft with parallel keyway 82
Figure 5-16 Preparation for gear units with hollow shaft and spline 84
Figure 5-17 Pulling on with integrated DU bushing 86
Figure 5-18 Dismantling using an end plate 89
Figure 5-19 Dismantling using hydraulic pulling equipment 90
Figure 5-20 Preparation for gear units with hollow shaft and shrink disk 93
Figure 5-21 Possible displacements 97
Figure 5-22 Alignment process based on the example of a flexible coupling 97
Figure C-1 Rating plate 143

Introduction

1

Naming convention

This product, which can be used as a gear reduction unit or multiplier gear unit, is referred to below as "gear unit".

1.1 Legal information

Warning system

These instructions contain information you must observe for your own personal safety as well as to avoid damage to property and persons. The information regarding your personal safety is highlighted with a warning triangle. Information exclusively regarding property damage alone is not marked with a warning triangle. Depending on the hazard class, the warnings shall be depicted as follows, in descending order.

⚠ DANGER

means that death or severe physical injury **will** occur if the relevant precautionary measures are not taken.

⚠ WARNING

means that death or severe physical injury **may** occur if the relevant precautionary measures are not taken.

⚠ CAUTION

means that mild physical injury may occur if the relevant precautionary measures are not taken.

NOTICE

means that damage to property may occur if the relevant precautionary measures are not taken.

If multiple hazard classes come into play, the warning for the highest level in question shall always be used. If a warning containing the warning triangle warns of harm to individuals, the same warning may also include a warning regarding damage to property.

Information

Information

Information offers additional notes, assistance and tips for handling the product.

Qualified personnel

The product/system associated with this documentation may only be used by **qualified personnel** trained to perform the relevant tasks, taking into account the associated documentation for the relevant tasks, particularly the safety information and warnings included therein. Due to their qualification and experience, qualified personnel are capable of detecting risks and avoiding potential hazards when dealing with these products/systems.

Intended use of Flender products

Please note the following:

⚠ WARNING

Flender products are only suitable for the uses set out in the catalogue and associated technical documentation. If third-party products and components are used, these must be recommended and/or authorised by Flender. Safe and flawless operation of the products requires proper transport, proper storage, setup, assembly, installation, commissioning, operation and maintenance. The permissible environmental conditions must be adhered to. Instructions in the associated documentation must be followed.

Trademarks

All designations marked with the trademark symbol ® are registered trademarks of Flender GmbH. Other designations in this document may be trademarks whose use by third parties for their own purposes may violate the rights of the owner.

Liability disclaimer

We have assessed the contents of these instructions for compliance with the hardware and software described. However, deviations cannot be ruled out, so we are unable to accept liability for full compliance. The details in these instructions are regularly reviewed and necessary corrections are contained in subsequent editions.

1.2 General information

Purpose of the operating instructions

These operating instructions describe the gear unit and inform you about its handling, from installation to maintenance.

Keep these operating instructions for later use. Read the operating instructions before handling the gear unit. Follow the instructions.

Information

Liability disclaimer

Please make sure that every person who is commissioned to work on the gear unit has read and understood these instructions prior to handling the gear unit and adheres to all of the points. Failure to observe these instructions can cause product or property damage or personal injury.

Flender does not accept any liability for damage or operating failures which are due to non-adherence to these instructions.

The described gear unit represents the state of the art at the time these instructions were printed.

In the interest of further development, Flender reserves the right to make such changes to the individual assembly units and accessories that increase performance and safety whilst maintaining the essential features.

Explosion protection regulations

The term “Explosion Protection Directive” used in these instructions stands for the harmonization legislation of the European Union in compliance with the EU Declaration of Conformity for equipment and protective systems for intended use in potentially explosive atmospheres.

Required basic knowledge

In order to understand these operating instructions, you will need to have general knowledge about gear units. You will also need a basic understanding of the following topics:

- Application planning
- Assembly
- Commissioning
- Maintenance

Documentation landscape

These operating instructions form part of the delivery of your gear unit.

These operating instructions form part of the complete documentation supplied with the gear unit. The complete documentation encompasses other documents, including:

- Data sheet
- List of equipment
- Dimension drawing
- Operating Instructions 7300 on gear unit lubrication and preservation
- Operating instructions for mounted components
- Instructions for third-party devices

Copyright

The copyright for these instructions is held by Flender.

Without the authorisation of Flender, these instructions may not be used wholly or in parts for competitors’ purposes or be given to third parties.

If you have any technical queries, please contact the Customer Services address (Page 133).

1.3 Lubricants

The quality of the oil used must meet the requirements of the instructions 7300, which is provided as a separate item, otherwise the warranty provided by Flender will be void. Flenderurgently recommends that one of the oil types listed in instructions 7300, which have been appropriately tested and comply with the requirements, is used.

To avoid misunderstandings, Flender points out that, by making this recommendation, it is not approving the product in the sense of expressing a warranty for the quality of the lubricants supplied by your supplier. Every lubricant manufacturer is required to guarantee the quality of his/her products.

Information such as oil type, oil viscosity and required oil quantity can be found on the rating plate of the gear unit and in the documentation supplied with the gear unit.

The oil quantity specified on the rating plate is an approximate value. The actual quantity of oil required is determined by the marking on the oil dipstick or oil sight glass.

The operating instructions for the current lubricant recommendations of Flender can also be viewed on the Internet (https://www.flender.com/lubricants).

The oils listed there undergo continuous testing. As a result, the recommended oil types might in future be removed from the list or replaced by more advanced oils.

Flender recommends regular inspection to ascertain whether the selected lubricating oil is still approved by Flender. If it is not, another brand of oil should be selected instead.

Safety instructions 2

Flender offers products and solutions with industrial security functions, which support the safe and secure operation of plants, systems, machines and networks.

In order to safeguard plants, systems, machines and networks against cyber threats it is necessary to implement (and continually maintain) a holistic industrial security concept that corresponds to the current state of the art. Flender products and solutions undergo continuous development in this respect.

Customers are responsible for preventing unauthorised access to their plants, systems, machines and networks. These systems, machines and components shall be connected to the company network or the Internet only when and to the extent that this is absolutely necessary and appropriate protective measures (e.g. firewalls and/or network segmentation) shall be taken.

You can find further information about possible protection measures as part of Industrial Security in the following international series of standards, for example: IEC 62443 "Network and system security".

Flender products and solutions undergo continuous development in order to make them even safer. Flender strongly recommends that you regularly implement product updates as soon as they become available and that you only use the current product versions. Use of older or no longer supported versions can increase the risk of cyber threats.

2.1 The five safety rules

In order to protect yourself and prevent any damage to property, always observe the safety relevant information and the following five safety rules (as per EN 50110-1 "Working on isolated equipment") when working on electrical components of the plant.

Prior to starting work on the machine, follow the safety rules listed below:

1. Disconnect
   Also disconnect auxiliary circuits such as the anti-condensation heater
2. Safeguard against restart
3. Ensure that the system is de-energised
4. Earth and short circuit
5. Cover or cordon off adjacent live parts

When all the work is complete, cancel the safety measures in the reverse sequence.

2.2 General information

Introduction

All work on the gear unit should be performed with care and only by qualified personnel.

Symbols on the gear unit

The following symbols apply to the gear unit; some of which are found as coloured markings on the gear unit:

Points labelled on the gear unit	**Symbol**	**Coloured markings**
Earth connection point		
Air relief point		yellow
Oil filling point		yellow
Oil draining point		white
Oil level indicator		red
Oil level measurement		red
Oil overflow		
Connection point for vibration monitoring		
Lubrication point		red
Apply grease		
Lifting eye		
Eye bolt		
Do not unscrew		
Alignment surface, horizontal		
Alignment surface, vertical		
These symbols indicate the oil level checking procedure using the oil dipstick.	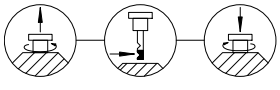	

Points labelled on the gear unit	Symbol	Coloured markings
These symbols indicate that the oil dip-stick must be firmly screwed in.	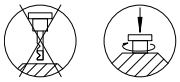	

Table 2-1: Symbols and markings

2.3 General warnings and symbols

The following table contains general warnings and their associated symbols.

ISO	ANSI	Warning
		Warning – hazardous electrical voltage
		Warning – explosive substances
	---	Warning – entanglement hazard
	---	Warning – hot surfaces
	---	Warning – corrosive substances
	---	Warning – suspended load
	---	Warning – hand injuries
		Explosion protection approval

Table 2-2: General warnings

2.4 Special types of danger and personal protective equipment

Requirements

Fulfil the following requirements before commencing work on the gear unit:

- Ensure that the oil pressure lines are depressurised.
- Only perform work on the gear unit when it is not in operation.
- Disconnect electrical systems from the power supply.



⚠ DANGER

Electric shock

Live parts can cause electric shock.

Ensure that the entire plant is de-energised before starting electrical installation work.

Protective equipment

Wear the following personal protective equipment when handling the gear unit:

- Safety shoes
- Overalls
- Helmet
- Safety gloves
- Safety goggles

⚠ WARNING

Risk of eye injury

Small foreign particles such as sand or dust can enter the cover plates of the rotating parts and be hurled back by them.

Wear safety goggles.

Dangers during operation

Damage to the gear unit is possible.

Switch the gear unit to standstill immediately if inexplicable changes are noticed during operation. Such changes may include unusual gear unit noise or a significant increase in operating temperature.

⚠ WARNING

Risk of falling

There is an increased risk of falling when standing or walking on the gear unit during operation.

Only walk or stand on the gear unit and its mounted components for maintenance and repair work when it is at a standstill. Do not walk or stand on shaft ends, protection covers, mounted components or pipes.



⚠ WARNING

Danger to life through rotating or moving parts

There is danger that rotating or moving parts may catch hold of you or pull you in.

Secure rotating and/or moving parts against contact using safeguards.

Surface temperature

The surface temperatures of the gear unit can become very extreme depending on the operating conditions.



⚠ WARNING

Risk of burns

Possible risk of serious burn injury from hot surfaces (> 55 °C).

Wear suitable protective gloves and protective clothing.

⚠ WARNING

Risk of scalding

Risk of serious injury possible through escaping hot operating media when these are being changed.

Wear suitable protective gloves, safety goggles and protective clothing.

⚠ WARNING

Danger due to low temperatures

Possible risk of serious injuries due to frost (pain, numbness, frostbite) on cold surfaces (< 0 °C).

Wear suitable protective gloves and protective clothing.

Chemical substances

Injuries can be sustained when using chemical substances.



⚠ WARNING

Risk of chemical burns due to chemical substances

There is a risk of chemical burns when handling aggressive cleaning agents.

Please observe the manufacturer's guidelines on how to handle cleaning agents and solvents. Wear suitable protective equipment (gloves, safety goggles). Please use binding agents to immediately clear up any spilt solvent.

⚠ CAUTION

Risk of injury due to chemically aggressive operating materials

There is a risk of injury to eyes and hands when handling chemically aggressive operating materials.

Please observe the safety instructions in the data sheets of the oil used. Wear suitable protective equipment (gloves, safety goggles). Use an oil-binding agent to immediately clean up spilt oil.

2.5 Intended use in potentially explosive atmosphere

Only use the gear unit according to the conditions specified in the service and delivery contract and the technical data in the Annex (Page 143). Deviating operating conditions are considered improper use. The user or operator of the machine or plant is solely liable for any resulting damage.

When using the gear unit, please specifically observe the following:

- Do not make any modifications to the gear unit that go beyond the permissible handling described in these operating instructions. This also applies to the guards designed to prevent accidental contact.
- Only ever use original replacement parts.
  Other replacement parts are not tested and approved by Flender. Non-approved replacement parts may possibly change the design characteristics of the gear unit and thus impair its active or passive safety.
  Flender will accept no liability or warranty whatsoever for damage occurring as a result of the use of non-approved replacement parts. The same applies to any accessories which were not supplied by Flender.
- All mounted components must strictly comply with the requirements laid down in the explosion protection regulations.

If you have any questions, please contact Customer Service (Page 133).



⚠ WARNING

Potentially explosive atmosphere can be ignited

A potentially explosive atmosphere can be ignited if mounted components are used that do not comply with the explosion protection regulations.

All mounted components must strictly comply with the requirements laid down in the explosion protection regulations.

Connect basic electrical equipment (e.g. monitoring devices, switches, Pt 100 measuring resistors) that have no marking according to the Explosion Protection Directive using suitable isolating amplifiers so that intrinsic safety is guaranteed.

⚠ WARNING

Risk of falling

Risk of serious injury through falling.

Only walk or stand on the gear unit for maintenance and repair work when it is at a standstill. Do not walk or stand on shaft ends, protective covers, mounted components or pipework.

Using the gear unit

When using the gear unit, please observe the following basic rules:

- Ensure that the gear unit is operationally safe.
- The gear unit must only be operated, maintained and repaired by authorised, trained, instructed and qualified personnel.
- The relevant occupational safety and environmental protection provisions must be taken into account in transport, assembly and dismantling, operation, servicing and maintenance.

- Cleaning the outside of the gear unit with a high-pressure cleaning device is not permitted.
- Do not perform any welding work anywhere on the gear unit or connected parts. Do not use the gear unit or connected parts as an earthing point for electric-welding operations. Gear parts and rolling-contact bearings may be irreparably damaged by welding.
- Establish the appropriate potential equalisation connections.



⚠ WARNING

Potentially explosive atmosphere can be ignited

A potentially explosive atmosphere can be ignited if sparking occurs as a result of a gear unit that has not been earthed.

Perform potential equalisation in accordance with the applicable regulations and directives.

Threaded holes are provided on the gear unit to establish an earth connection. This work must be carried out by specialists in electrical engineering.

- In the case of gear units that are operated in combination with electrical machines that generate current or through which current flows (e.g. motors and generators), take measures to ensure that no current can flow through the gear unit.
  Current flowing through the gear unit can result in irreparable damage to rolling-contact bearings and gears. Short circuits, voltage flashovers and deposits of conductive dust, for example, can all allow current to flow.
  Use insulators and earth the gear unit properly.
- When removing any guards, store their fixings in a safe place.
- Removed guards must be re-fitted prior to starting.
- Observe the notices mounted on the gear unit, e.g. rating plate, direction of rotation arrow symbol, etc. The notices must be kept free from paint or dirt. Replace missing plates.
- Bolts which have been damaged during assembly or disassembly work must be replaced with new ones of the same strength class and type.

⚠ DANGER

Danger to life when the system is switched on

Death or serious injury will occur.

Always shut down the gear unit and any oil supply system (whether separate or attached to the gear unit) before you perform any work. Secure the drive aggregate against being operated accidentally as follows:

- Turn off the key-operated switch.
- Remove the fuses in the power supply.
- Attach an information notice to the start switch, clearly stating that work is being carried out on the gear unit.
- Ensure that the entire system is not under a load to avoid danger during dismantling work.



⚠ WARNING

Potentially explosive atmosphere can be ignited

A potentially explosive atmosphere can be ignited if electrostatic discharge occurs due to the coating becoming charged.

Carefully ensure that highly efficient charge generating mechanisms, which can cause layers and coatings to be electrostatically charged, are reliably avoided.

The mechanisms that can very easily generate electrostatic charges include:

- Fast flows of highly dust-laden air
- Sudden outflow of pressurised gases containing particles
- Other severe friction-based processes (not manual cleaning or rubbing with cleaning cloths)

If explosion protection is necessary according to the Explosion Protection Directive for areas of explosion group IIC or with the minimum ignition energy ≤ 3 mJ, the coating must be conductive enough to remove electrostatic charges.

Further use of the gear unit

When integrating the gear unit in machines or systems, the machine or system manufacturer is obliged to include the provisions, instructions and descriptions contained in this set of instructions in their machine instructions.

Description 3

3.1 General description

The FLENDER® gear unit (referred to below simply as "gear unit") described in these operating instructions has been developed to drive a wide spectrum of machines in a diverse range of industrial sectors. The range of potential applications for gear units in this series includes wastewater systems, excavators, the chemical industry, foundries, conveyors, crane systems, the food industry, paper-processing machines, cable cars and the cement industry.

The gear unit is available as a two, three or four-stage helical or bevel helical gear unit. These are designed for vertical mounting. The gear unit is also available for other mounting positions on request.

It can essentially be operated in both directions of rotation. Gear units equipped with backstop or overrunning clutch are the exceptions in this case. Flender must be consulted if, for these versions, the direction of rotation is to be reversed.

Designs

Various shaft arrangements (versions and directions of rotation) are possible. These are depicted schematically as a solid shaft below. The direction of rotation arrows indicate the dependency of the direction of rotation of the input and output shafts.

Design	Type					
	H2.V	H3.V	H4.V	B2.V	B3.V	B4.V
A	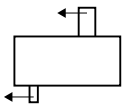	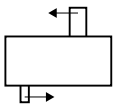	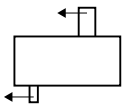	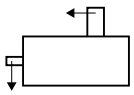	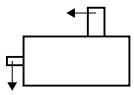	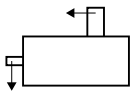
B	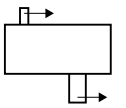	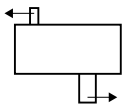	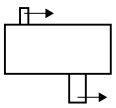	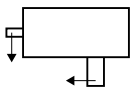	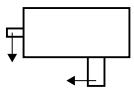	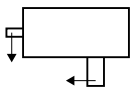
C	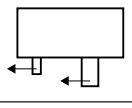	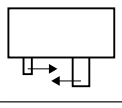	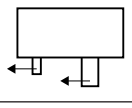	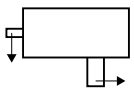	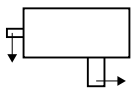	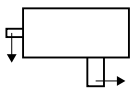
D	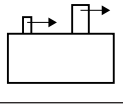	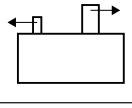	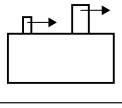	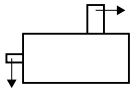	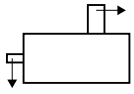	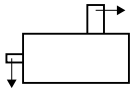

Table 3-1: Designs and associated directions of rotation

When an auxiliary drive is mounted, the assignment of the direction of rotation to the specific version is defined in the dimension drawing.

NOTICE

Destruction of the gear unit or parts of the gear unit due to incorrect direction of rotation is possible

Depending on the order specification, the gear unit can have one direction of rotation if it is equipped with a backstop or overrunning clutch.

3.2 Output shaft versions

The following versions of output shaft are available:

- S = Solid shaft
- V = Solid shaft, reinforced
- F = Flange shaft
- H = Hollow shaft with parallel keyway
- D = Hollow shaft for shrink disk
- K = Hollow shaft with spline according to DIN 5480

The available versions of output shaft are illustrated in the diagram below:

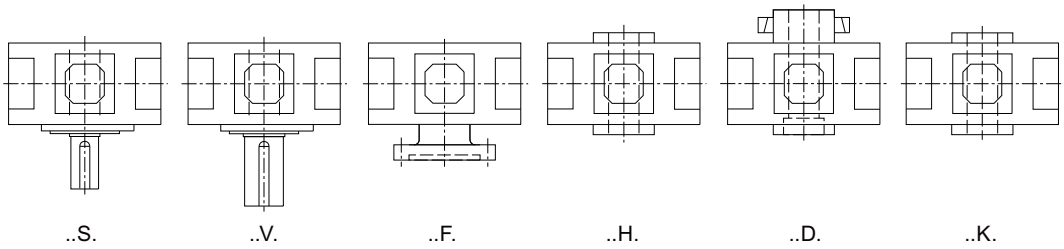

Figure 3-1: Output shaft versions

S	Solid shaft	H	Hollow shaft with parallel keyway
V	Solid shaft, reinforced	D	Hollow shaft for shrink disk
F	Flange shaft	K	Hollow shaft with spline according to DIN 5480

Further information

Further information and a detailed illustrated description of the gear unit can be found in the dimension drawing in the complete documentation for the gear unit.

3.3 Housing

Introduction

The housing is made of cast iron. When specified, the housing can also be manufactured out of steel.

Gear units up to and including size 12 have a one-part housing. Gear units in size 13 or over have a two-part housing.

The gear unit housing has the following features:

- Attachment points for moving the gear unit
- Inspection and assembly cover for inspection
- Oil filling point for refilling with oil
- Oil sight glass, oil level indicator or dipstick for checking the oil level
- Oil drain screw or oil drain valve for changing the oil
- Air filter or wet-air filter for ventilation and bleeding

If several mounted components for checking the oil level are mounted on the gear unit, the dipstick should be regarded as the most reliable.

More information

Additional information and a detailed illustration of the gear unit can be found in the dimension drawing provided in the complete gear unit documentation.

The grease lubrication points are designated using the following plate:

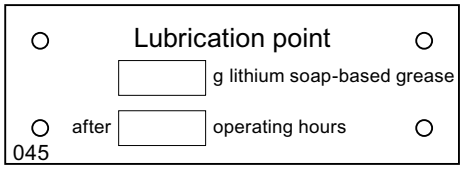

Figure 3-2: Plate: Lubrication point

Gear unit equipment

The diagram below shows the available gear unit equipment on gear units of type H..V with oil expansion unit

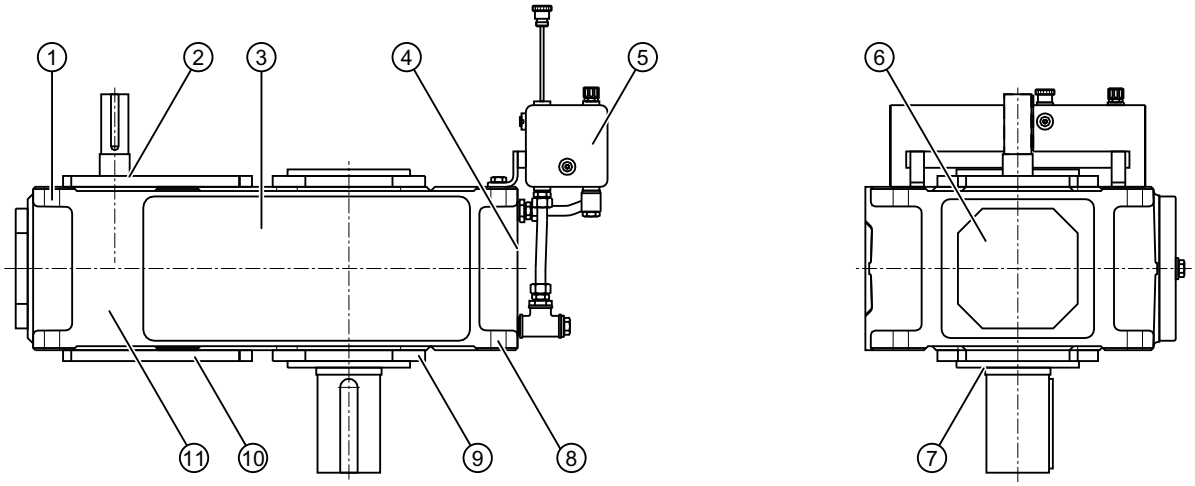

Figure 3-3: Gear unit equipment on type H..V gear units with oil expansion unit

① Lifting eye
② Shaft seal
③ Inspection and assembly cover
④ Rating plate
⑤ Oil expansion unit
⑥ Cover
⑦ Shaft seal
⑧ Gear unit fastening
⑨ Cover
⑩ Cover
⑪ Housing

The diagram below shows the gear unit equipment on type H..V gear units with oil expansion unit and oil cooling system pump:

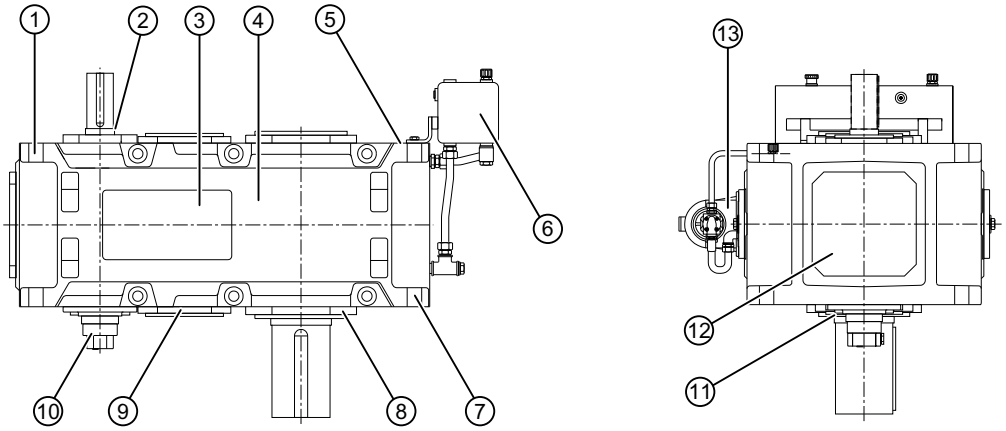

Figure 3-4: Gear unit equipment on type H..V gear units with oil expansion unit and oil cooling system pump

① Lifting eye
② Shaft seal
③ Inspection and assembly cover
④ Housing
⑤ Rating plate
⑥ Oil expansion unit
⑦ Gear unit fastening
⑧ Cover
⑨ Cover
⑩ Flange pump (optional)
⑪ Shaft seal
⑫ Cover
⑬ Motor pump (optional)

The diagram below shows the gear unit components for model B..V gear units with oil expansion unit:

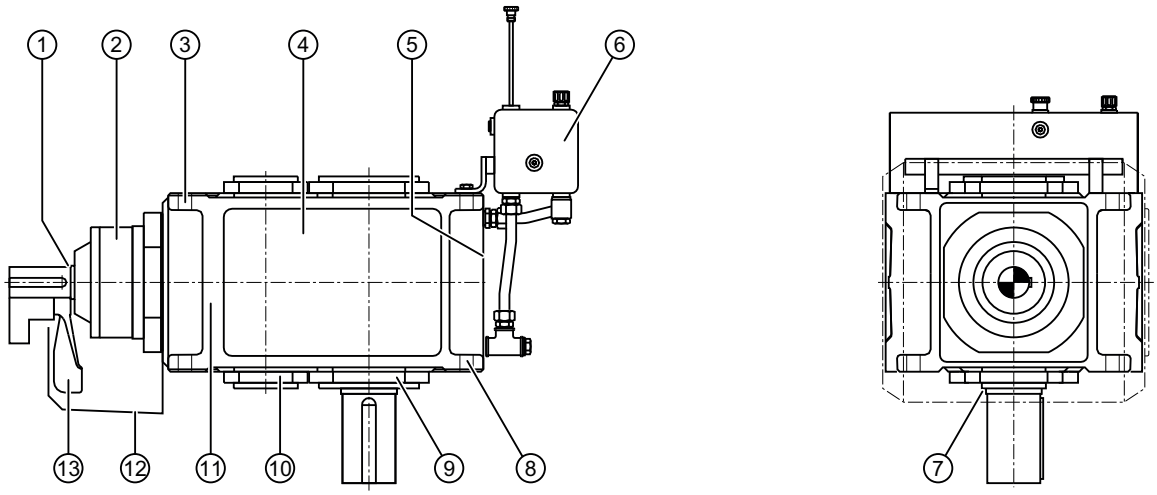

Figure 3-5: Gear unit components for model B..V gear units with oil expansion unit

① Shaft seal
② Bearing neck
③ Lifting eye
④ Inspection and assembly cover
⑤ Rating plate
⑥ Oil expansion unit
⑦ Shaft seal
⑧ Gear unit fastening
⑨ Cover
⑩ Cover
⑪ Housing
⑫ Air guide cover
⑬ Fan

The diagram below shows the gear unit components for model B..V gear units with oil expansion unit and oil cooling system pump:

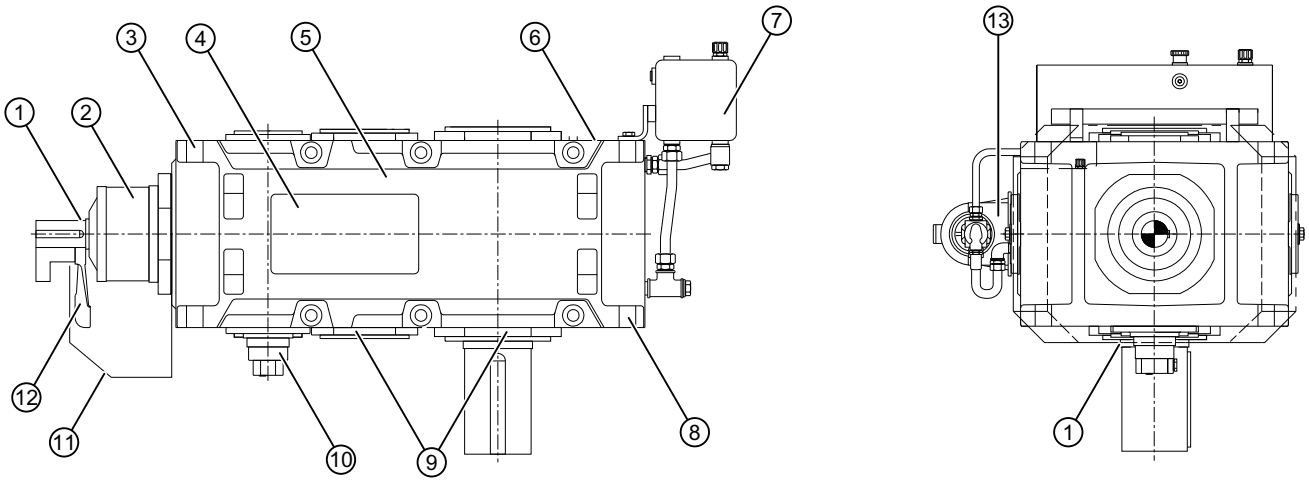

Figure 3-6: Gear unit components for model B..V gear units with oil expansion unit and oil cooling system pump

① Shaft seal
② Bearing neck
③ Lifting eye
④ Inspection and assembly cover
⑤ Housing
⑥ Rating plate
⑦ Oil expansion unit
⑧ Gear unit fastening
⑨ Cover
⑩ Flange pump (optional)
⑪ Air guide cover
⑫ Fan
⑬ Motor pump (optional)

More information

You can find additional information about the position of the mounted components and a detailed illustration of the gear unit in the dimension drawing in the complete documentation for the gear unit.

3.4 Oil supply of the gear unit

The individual gear unit components are splash-lubricated.

3.4.1 Splash lubrication

Unless otherwise agreed by contract, the gearing and rolling-contact bearings are supplied with an adequate quantity of oil by splash lubrication.

Depending on the order specification, the splash lubrication system can be supplemented by grease lubrication of individual rolling-contact bearings.

In the vertical mounting position, all gears and rolling-contact bearings are submersed in oil. The space required for oil to expand is provided in the form of an oil expansion unit that is screwed onto the unit.

3.5 Bearing arrangement of the shafts

All shafts are mounted on rolling-contact bearings.

3.6 Shaft seal

Introduction

Depending on requirements, shaft seals prevent oil from escaping from the gear unit or dirt from entering the gear unit.

3.6.1 Rotary shaft sealing rings

Rotary shaft sealing rings are the standard seal used. Wherever possible, rotary shaft sealing rings are equipped with an additional dust lip which protects the actual sealing lip against external contaminants.

NOTICE
Irreparable damage to the rotary shaft sealing ring caused by high concentration of dust A damaged rotary shaft sealing ring might not be able to effectively seal the gear unit. In very dusty atmospheres, do not use rotary shaft sealing rings unless they have additional protection.

For specific mounting positions, the rotary shaft sealing ring is used together with a grease packing in conjunction with a ring (dry-running protection).

For high dust concentrations, in compliance with the Explosion Protection Directive, use is only permitted in conjunction with a Taconite seal (Page 31).

The diagram below shows a rotary shaft sealing ring

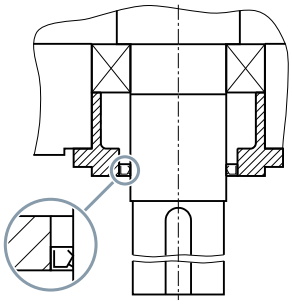

Figure 3-7: Rotary shaft sealing ring

3.6.2 Dry-running protection

A grease filling and a ring are provided above the shaft sealing ring in order to reliably prevent the rotary shaft sealing ring, located at the top, from running dry.

In a case such as this, a shaft sealing ring without additional dust lip is used. The ring is fitted on the shaft using a set screw, and prevents grease from escaping upwards. During operation, the ring rotates contactlessly in the housing cover.

The diagram below shows dry-running protection:

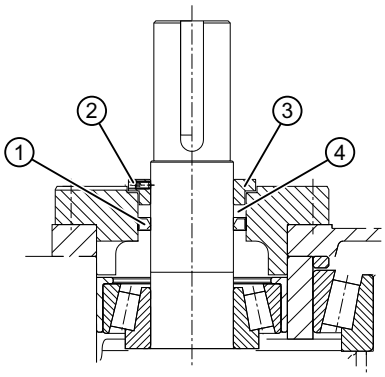

Figure 3-8: Dry-running protection

① Rotary shaft sealing ring
② Set screw
③ Ring
④ Grease filling

3.6.3 Taconite seal

The taconite seal is a combination of two sealing elements:

- Rotary shaft seal to prevent the escape of lubricating oil
- Grease-filled dust seal (comprising a labyrinth and a lamellar seal) to allow operation of the gear unit in extremely dusty environments

The taconite seal is ideal for use in dusty environments.

NOTICE

Gear unit leaks caused by poor sealing

Regrease the labyrinth seals at the specified regreasing intervals. The regreasing intervals are specified in the Maintenance schedule (Page 119).

A taconite seal is illustrated in the diagram below:

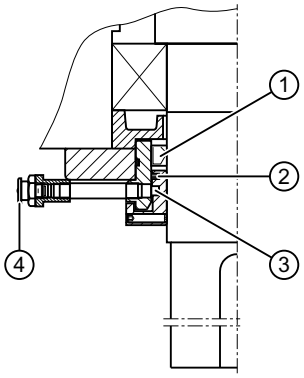

Figure 3-9: Taconite seal

① Rotary shaft sealing ring
② Lamellar seal
③ Labyrinth, filled with grease, can be re-greased
④ Grease nipple

The following design variants of taconite seal are available:

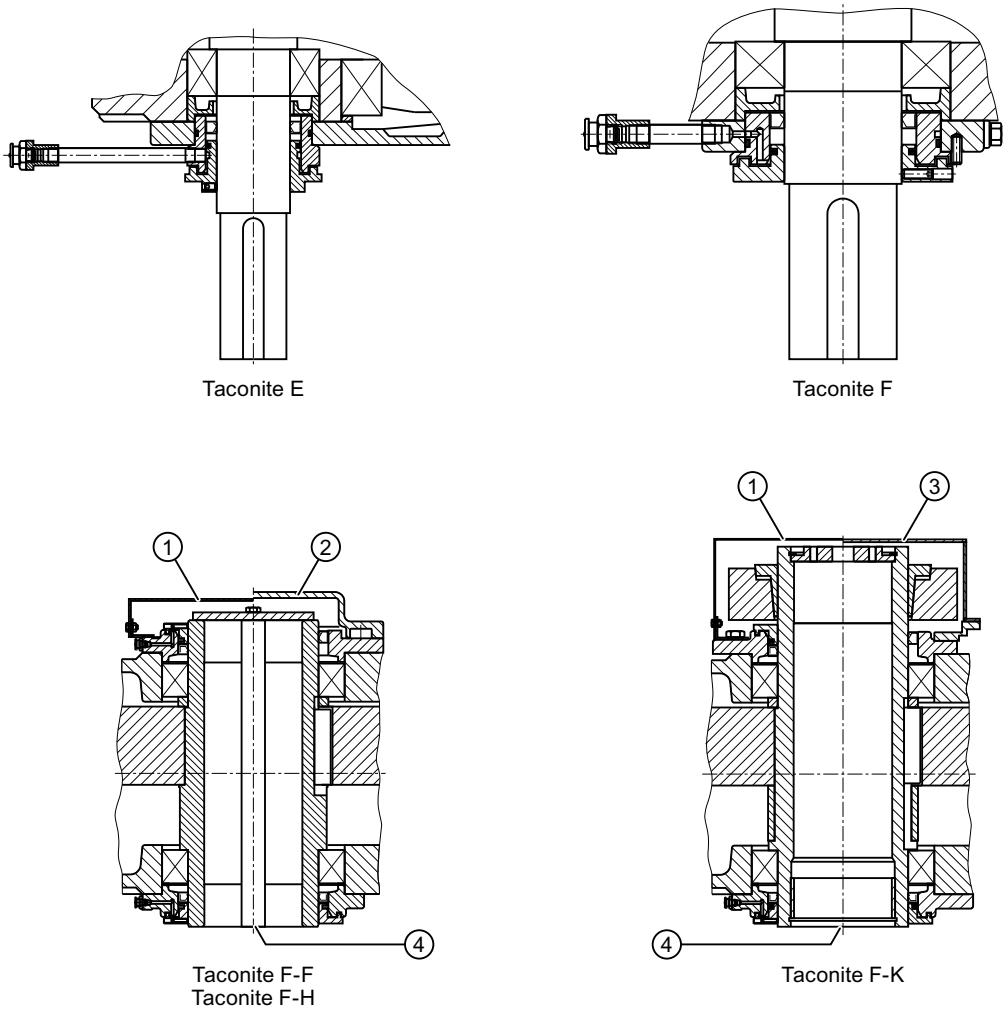

Figure 3-10: Design variants of taconite seals

① Taconite "F-F"
② Taconite "F-H"
③ Taconite "F-K"
④ Output

The various taconite seals are described in the following table:

Taconite seal versions	Application	Remarks
"E"	All input shafts with or without fan	• Regreasable labyrinth
"F"	Output shaft Design S: Solid shaft Design V: Solid shaft, reinforced Design F: Flange shaft	
"F-F"	Output shaft Design H: Hollow shaft with parallel keyway Design K: Hollow shaft with spline according to DIN 5480 Design D: Hollow shaft for shrink disk	• Labyrinth which can be regreased on both sides, including cover to protect against accidental contact at the gear unit end facing away from the output shaft

Taconite seal versions	Application	Remarks
"F-H"	Output shaft Design H: Hollow shaft with parallel keyway Design K: Hollow shaft with spline according to DIN 5480	• Regreasable labyrinth on the output side, dust-proof protection cover on the opposite side
"F-K"	Output shaft Design D: Hollow shaft for shrink disk	

Table 3-2: Taconite seal versions



⚠ DANGER

An explosive atmosphere can be ignited

Sparking or inadmissible temperature rise due to insufficient gap dimension might result in the ignition of an explosive atmosphere.

In the case of a shaft seal with taconite seals, ensure that the set gap dimension of $1^{+0.5}$ mm on the grease labyrinth is not changed when the input and output elements (e.g. coupling parts) are mounted. Rotating and stationary parts must not touch.

3.6.4 Centrifugal disk

A centrifugal disk can be fitted to the output shaft to prevent water from penetrating the gear unit.

The following diagram shows a centrifugal disk:

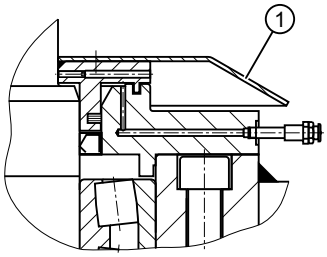

Figure 3-11: Centrifugal disk

① Centrifugal disk

3.7 Backstop

Introduction

For some requirements, the gear unit can be equipped with a mechanical backstop. In operation, the backstop only permits the specified direction of rotation. The direction of rotation is specified at the gear unit input - and - output using an arrow.

The backstop is mounted to the gear unit through an intermediate flange creating an oil tight seal; the backstop is integrated in the gear unit oil circuit.

Principle of operation

The backstop is fitted with centrifugally-operated sprags. If the gear unit rotates in the specified direction, the inner ring rotates together with the sprag cage in the direction of rotation of the shaft, while the outer ring remains stationary. Above a certain speed (disengagement speed) the sprags disengage from the outer ring. In this operating state, the backstop operates without any wear.

Before connecting the motor, identify the phase sequence of the three-phase power system using a phase sequence indicator. Connect the motor corresponding to the defined direction of rotation.

The blocking direction of the backstop can be changed by turning over the cage. You must always contact Flender in advance if you wish to change the blocking direction.

NOTICE

Damage to the backstop and gear unit due incorrect direction of rotation

Damage to the backstop and gear unit due incorrect direction of rotation possible.

Do not operate the motor adversely to the blocking direction of the gear unit. Observe the note attached to the gear unit.

The diagram below shows a backstop:

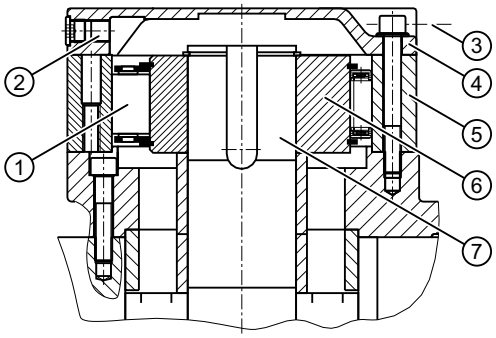

Figure 3-12: Backstop

① Cage with sprags
② Residual oil drain
③ Oil filling screw of the backstop
④ Cover
⑤ Outer ring
⑥ Inner ring
⑦ Shaft

NOTICE

Damage to or destruction of the backstop

Damage to or destruction of the backstop as a result of increased wear due to operation below disengagement speeds is possible.

Regularly replace the backstop when operating the gear unit at speeds below the disengagement speed of the backstop. Data indicating the replacement intervals is provided in the dimension drawing and on a notice plate attached to the gear unit. This plate is attached to the gear unit housing near the backstop.

3.8 Cooling

Introduction

The gear unit can be equipped with the following cooling equipment depending on requirements:

- Fan
- Cooling coil
- Mounted oil supply system with air-oil cooler
- Mounted oil supply system with water-oil cooler
- Separate oil supply system

When installing the gear unit, make sure that unhindered convection across the housing surface is possible in order to protect the gear unit against overheating.

Information

Oil supply system in accordance with explosion protection regulations

The oil supply system must be designed and manufactured in compliance with the explosion protection regulations.

3.8.1 Fan

Principle of operation

Generally, the fan is mounted on the high-speed shaft of the gear unit and is protected from accidental contact using an air guide cover. The fan draws in air through the protective grille of the air guide cover and blows it along the lateral air ducts on the gear unit housing. The fan dissipates a certain amount of heat from the housing.

Improper use can damage the gear unit. Follow the instructions given below in order to protect the gear unit against overheating:

- When you install the protective device for the coupling or similar on gear units that are equipped with a fan, make sure that you leave sufficient clearance for cooling air to be drawn into the fan.
  The required clearance is specified in the dimension drawing in the complete documentation for the gear unit.
- Make sure that the air guide cover is correctly fastened.
- Protect the air guide cover against damage by external components.
- Make sure that there is no contact between the fan and the air guide cover.
- Note that the cooling effect can be significantly impaired if the fan is dirty or if the surface of the housing is covered with dust or contaminants that act as an insulating layer.
  Clean the fan and the gear unit. Observe the cleaning information in chapter Cleaning the fan and gear unit (Page 123).

A fan mounted on a gear unit is illustrated in the diagram below:

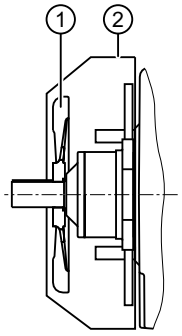

Figure 3-13: Fan

① Fan ② Air guide cover

Further information

Further information and a detailed illustration of the gear unit and the position of the mounted components can be found in the dimension drawings in the complete documentation for the gear unit.

3.8.2 Cooling coil

Introduction

The gear unit can be equipped with a cooling coil in the oil sump. The cooling coil is connected to a cooling water supply. The cooling water connection must be provided by the operator. The cooling water can be fresh water, sea water or brackish water.

Principle of operation

Heat from the gear unit oil is transferred to the cooling water as it flows through the cooling coil.

Information

To prevent the formation of condensation, make sure that the cooling coil is fully immersed in the oil.

Improper use can damage the cooling coil. Be sure to take the following precautions:

- Make sure that the cooling water pressure does not exceed 8 bar.
  The direction of water flow through the gear unit is optional.
- Make sure that the ends of the cooling coil are not twisted and that the reducer screws are not removed or retightened.
- Never loosen the locknuts.
- If there is a risk of freezing temperatures or the gear unit is to remain out of service for a prolonged period, drain the cooling water out of the coil and blow the coil out with compressed air to remove any water residue.

- Use a suitable cooling water flow regulator (e.g. a pressure reducing valve or an appropriate isolation valve) in order to prevent excessive water pressure at the cooling water inlet.

⚠ WARNING

Risk of eye injury from compressed air

Water residue and dirt particles can cause damage to eyes.

Wear suitable safety goggles.

The diagram below shows the cooling coil connections:

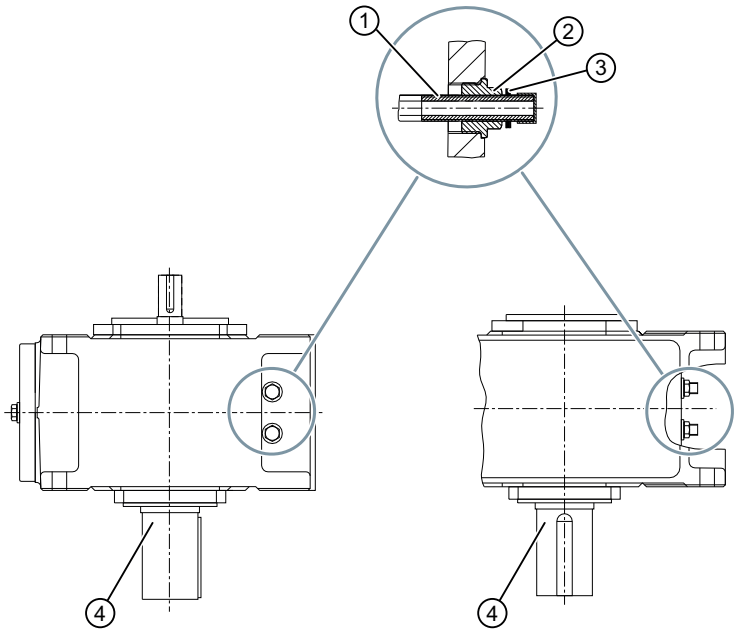

Figure 3-14: Cooling coil connections

① Cooling water connection
② Reducer screw
③ Locknut
④ Output shaft

Refer to the following table for the cooling water flow rate requirements (in l/min):

Type	Gear unit size															
	3	4	5	6	7	8	9	10	11	12	13	14	15	16	17	18
H2.V	4	4	4	4	4	4	8	8	8	8	8	8	8	8	8	8
H3.V	-	-	4	4	4	4	4	4	8	8	8	8	8	8	8	8
B2.V	4	4	8	4	8	4	8	8	8	8	8	8	8	8	8	8
B3.V	-	4	4	4	4	4	8	8	8	8	8	8	8	8	8	8

Table 3-3: Required cooling water flow rate

The cooling water flow rate requirements for types H4.V and B4.V and for gear unit sizes of ≥ 19 are available on request.

Further information

For further information and a detailed illustration of the gear unit and the connection dimensions, please refer to the dimension drawings in the complete gear unit documentation.

The required cooling water flow rate and the maximum permissible inlet temperature can be found in the separate data sheet, the list of equipment or the dimension drawing in the complete documentation for the gear unit.

3.8.3 Mounted oil supply system

3.8.3.1 Mounted oil supply system with air-oil cooler

Introduction

Depending on the order specification, an oil supply system with air-oil cooler can be used. This oil cooling system is mounted on the gear unit.

Principle of operation

The air-oil cooler is used to cool the gear unit oil; the ambient air is used as coolant. The oil is fed through the cooler in one or several channels, depending on the volume flow, while passing by the ambient air blown through the cooler by the fan. For cold starts, a bypass pipe with a temperature-controlled valve is provided.

For certain applications, a motor pump can be used instead of a flange pump.

A mounted oil supply system with air-oil cooler can include the following components:

- Air-oil cooler
- Flange or motor pump
- Oil filter (coarse filter or a double change-over filter)
- Pressure monitor
- Temperature control valve
- Pipes

Information

Observe the flow direction of the pump

When connecting the valves, observe the actual flow direction of the pump.

Refer to the pump operating instructions in the complete gear unit documentation to ascertain whether the flow direction of the pump used depends on the direction of rotation.

Improper use can damage the gear unit. Be sure to take the following precautions:

- When installing a gear unit with mounted air-oil cooler, carefully ensure that air can freely circulate.
  The necessary minimum clearance to adjacent components such as walls and panels is specified in the dimension drawing in the complete gear unit documentation.

- Note that the cooling effect can be significantly impaired if the air-oil cooler and the surface of the housing are covered with dust or contaminants that act as an insulating layer. This can cause the gear unit to overheat.

  Clean the air-oil cooler and the gear unit. Cleaning information is provided in chapter Cleaning the fan and gear unit (Page 123).

The function is monitored using temperature monitoring in the oil sump or pressure monitoring.

The diagram below shows an oil supply system with air-oil cooler mounted on type B..V gear units:

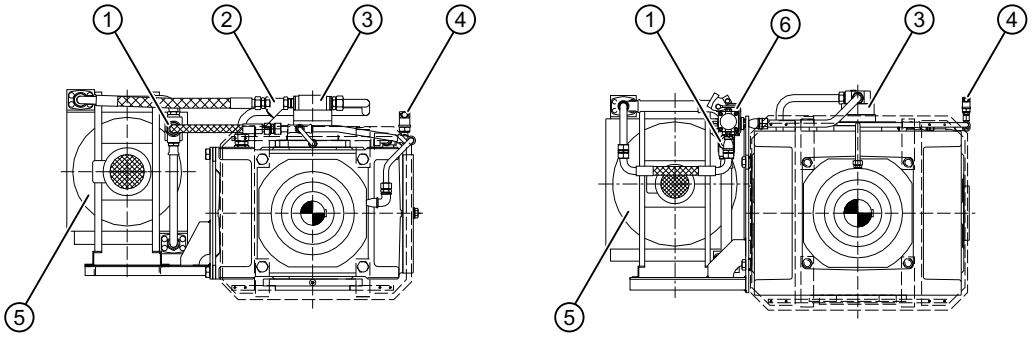

Figure 3-15: Oil supply system with air-oil cooler mounted on type B..V gear units

① Temperature control valve
② Coarse filter
③ Flange pump
④ Pressure monitor
⑤ Air-oil cooler
⑥ Double change-over filter

The diagram below shows an oil supply system with air-oil cooler mounted on type H..V gear units:

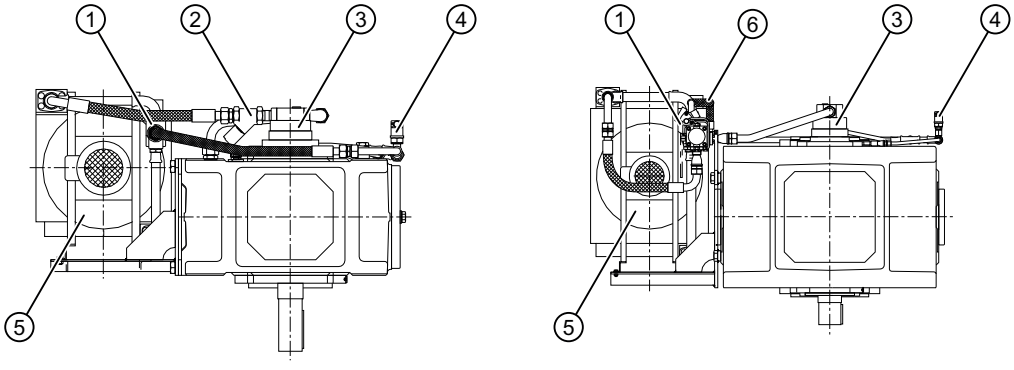

Figure 3-16: Oil supply system with air-oil cooler mounted on type H..V gear units

① Temperature control valve
② Coarse filter
③ Flange pump
④ Pressure monitor
⑤ Air-oil cooler
⑥ Double change-over filter

Further information

Additional information such as connection dimensions and a detailed illustrated description of the gear unit and the oil supply system with air-oil cooler can be found in the dimension drawing in the complete gear unit documentation.

Additional information about the oil supply system and control instructions can be found in the separate data sheet, in the list of equipment and in the oil supply system operating instructions provided in the complete gear unit documentation.

3.8.3.2 Mounted oil supply system with water-oil cooler

Introduction

Depending on the order specification, an oil supply system with water-oil cooler can be used. This oil cooling system is mounted on the gear unit.

Principle of operation

The water-oil cooler is used to cool the gear unit oil; water is used as coolant.

For certain applications, a motor pump can be used instead of a flange pump.

A mounted oil supply system with water-oil cooler can include the following components:

- Water-oil cooler
- Flange or motor pump
- Oil filter (coarse filter or a double change-over filter)
- Pressure monitor
- Pipes

The operating company must establish the cooling water connection required.

Information

Observe the flow direction of the pump

When connecting the valves, observe the actual flow direction of the pump.

Refer to the pump operating instructions in the complete gear unit documentation to ascertain whether the flow direction of the pump used depends on the direction of rotation.

Improper use can damage the gear unit. Be sure to take the following precautions:

- Make sure that the cooling water pressure does not exceed 8 bar.
- Maintain the specified flow direction of the water-oil cooler so that an optimum cooling power is achieved. Do not interchange the cooling water intake and outlet.
- If there is a risk of freezing temperatures or the gear unit is to remain out of service for a prolonged period, drain the cooling water out of the coil and blow the coil out with compressed air to remove any water residue.

⚠ WARNING

Risk of eye injury from compressed air

Water residue and dirt particles can cause damage to eyes.

Wear suitable safety goggles.

The function is monitored using temperature monitoring in the oil sump or pressure monitoring.

The diagram below shows an oil supply system with water-oil cooler mounted on type H..V gear units:

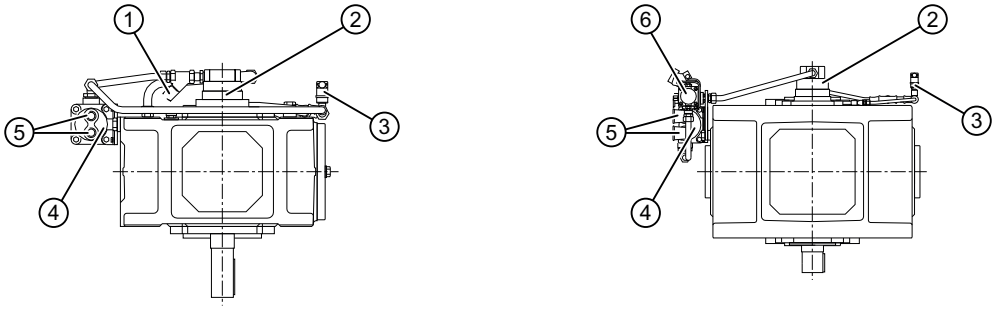

H..V ≤ 12 H..V ≥ 13

Figure 3-17: Oil supply system with water-oil cooler mounted on type H..V gear units

① Coarse filter
② Flange pump
③ Pressure monitor
④ Water-oil cooler
⑤ Cooling water intake and outlet
⑥ Double change-over filter

The diagram below shows an oil supply system with water-oil cooler mounted on type B..V gear units:

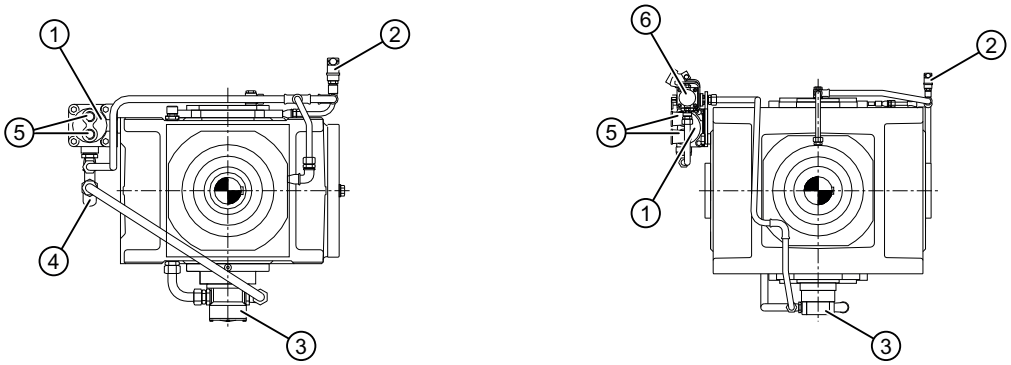

B..V ≤ 12 B..V ≥ 13

Figure 3-18: Oil supply system with water-oil cooler mounted on type B..V gear units

① Water-oil cooler
② Pressure monitor
③ Flange pump
④ Coarse filter
⑤ Cooling water intake and outlet
⑥ Double change-over filter

Further information

Additional information such as connection dimensions and a detailed illustrated description of the gear unit and the oil supply system with water-oil cooler can be found in the dimension drawing in the complete gear unit documentation.

Additional information about the oil supply system, control notes, the required cooling water quantity and the maximum permissible water intake temperature can be found in the separate data sheet, in the list of equipment and in the oil supply system operating instructions provided in the complete gear unit documentation.

3.8.3.3 Pump

Requirements placed on the medium being pumped

The pump being used is suitable for pumping lubricating oil. It is not permissible that the oil contains abrasive components and must not chemically attack the materials used in the pump. Clean oil with good lubricating properties is a precondition for ensuring the correct function, high operational reliability and long service life of the pump.

3.8.3.4 Oil filter

Introduction

The oil filter protects downstream units, measuring and control devices against dirt and pollution.

A coarse filter is mounted as standard on gear units up to size 12, and a double change-over filter on gear units of size 13 and over. The oil filter may vary depending on the order specification. The type of oil filter mounted on the gear unit is specified in the list of equipment in the complete documentation for the gear unit.

Principle of operation

The oil filter comprises a housing with connections and a filter cartridge. The medium flows through the filter housing, where, depending on the filter gauge, most of the dirt particles larger than a defined size in the oil are filtered out. Dirty filter cartridges must be cleaned or replaced.

3.8.4 Separate oil supply system

A separate oil supply system can be used for cooling the oil.

The function is monitored using temperature monitoring in the oil sump or pressure monitoring.

Further information

Further information about separate oil supply systems can be found in the oil supply system operating instructions in the complete documentation for the gear unit.

You can find additional information about the components of the oil supply system in the operating instructions for the components in the complete gear unit documentation.

You can find additional technical data in the separate data sheet and in the equipment list in the complete gear unit documentation.

3.9 Couplings

Flexible couplings or safety couplings are generally used at the input end of the gear unit.

For gear unit types with solid output shaft, flexible couplings or safety couplings are generally used for the output shaft.

Use of rigid couplings or other input or output elements that generate additional radial or axial forces (e.g. gear wheels, belt pulleys, flywheels or hydraulic couplings) must be agreed contractually.

If a hydraulic coupling is to be used in combination with gear units with a fan, mount the hydraulic section of the coupling on the motor shaft in order to provide sufficient space for intake of cooling air.

Further information

You can find additional information about the couplings in the coupling operating instructions provided in the complete gear unit documentation.

3.10 Shrink disk

A shrink disk is provided as a frictional clamping connection between the gear unit hollow shaft and the driven machine on shaft-mounted gear units.

The shrink disk allows an interference fit to be created between a hollow shaft and a stub shaft (machine shaft), referred to hereafter as "stub shaft". The interference fit is capable of transferring torques, bending moments and forces. Crucial to the successful transmission of torques and/or power is the joint pressure between the hollow and stub shafts generated by the shrink disk.

Further information

Further information about the shrink disk can be found in the shrink disk operating instructions. These are included in the complete documentation for the gear unit.

3.11 Heating

Introduction

At low ambient temperatures it may be necessary to preheat the gear unit oil before switching on the drive or while it is in operation.

Heating is only permissible in conjunction with an oil level monitoring system (Page 46).

Heating elements

Heating elements can be used for these applications, for example. Heating elements convert electricity into heat and transfer this to the oil in which they are immersed. In some circumstances it is not possible to replace the heating inserts without first draining off the oil. Please read the relevant information contained in the operating instructions for the heating elements or ask Customer Services (Page 133).

Complete immersion of the heating elements in the oil bath must be ensured by adhering to the installation position in accordance with the dimension drawings in the complete documentation and the oil level.



DANGER

Explosion and fire hazard

Exposed heating elements pose an explosion or fire hazard as they can ignite an explosive atmosphere.

Do not switch on the heating elements unless you have checked that they are completely immersed in the oil bath.

If heating elements are retrofitted, the heat output at the outer surface of the heating element must not exceed the maximum values stated in the table below.

The following table contains information about the specific heat output P_{HO} as a function of ambient temperature:

P_{HO} in W/cm^2	Ambient temperature in °C
0.9	10 to 0
0.8	0 to -25
0.7	-25 to -50

Table 3-4: Information about the specific heat output

The diagram below shows a heating system on type H..V and B..V gear units:

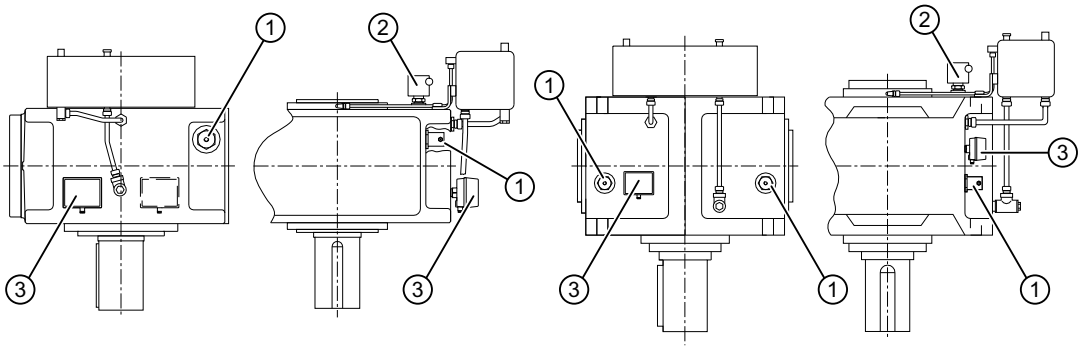

H..V / B..V ≤ 12 H..V / B..V ≥ 13

Figure 3-19: Heating system on type H..V and B..V gear units

① Heating element
② Oil level monitoring system
③ Temperature monitor

Heating element control

The heating elements can be controlled by a temperature monitor or an oil temperature monitoring system (Page 47). The temperature monitor provides a signal to be amplified when the minimum and maximum temperatures are reached.

More information

More information about the position of the mounted components and a detailed illustration of the gear unit can be found in the dimension drawing in the complete documentation for the gear unit.

More information about heating elements can be found in the separate data sheet, in the list of equipment and in the heating element operating instructions in the complete documentation for the gear unit.

More information about the temperature monitor as well as control instructions can be found in the list of equipment and the temperature monitor operating instructions in the complete documentation for the gear unit.

3.12 Oil level indicator

The following components can be mounted to the gear unit to visually check the oil level:

- Oil sight glass
- Oil level indicator
- Oil dipstick

If several components for checking the oil level are mounted on the gear unit, the oil dipstick should be regarded as the most reliable.

Check the oil level when the gear unit is stationary and with the oil in a cool state.

More information

You can find additional information about the oil level indicator and checking the oil in the instructions 7300 in the complete documentation for the gear unit.

More information, a detailed illustration of the gear unit and the position of the mounted components can be found in the dimension drawing in the complete documentation for the gear unit.

3.13 Oil level monitoring system

Oil level monitoring system for the heating elements

The gear unit must be equipped with an oil level monitoring system.

This monitoring checks the minimum oil level of the gear unit for immersing the heating elements.

Principle of operation

Connect up the "Oil level too low" signal in such a way that it causes the heating elements to be switched off.

This guarantees that the heating elements are only operated if they are completely immersed in the oil.



DANGER

Explosion and fire hazard

Exposed heating elements pose an explosion or fire hazard as they can ignite an explosive atmosphere.

Do not switch on the heating elements unless you have checked that they are completely immersed in the oil bath.

If heating elements are retrofitted, the maximum heat output at the outer surface of the heating element must not be exceeded.

Further information

Further information and a detailed illustration of the gear unit and the position of the mounted components can be found in the dimension drawing in the complete documentation for the gear unit.

Further information about oil level monitoring, control instructions and the technical data can be found in the operating instructions for the oil level monitor, in the list of equipment and in the separate data sheet in the complete documentation for the gear unit.

3.14 Oil temperature monitoring

Depending on the order specification, the gear unit can be fitted with a Pt 100 resistance thermometer for measuring the oil temperature in the oil sump.

To measure temperatures or temperature differences, connect the Pt 100 resistance thermometer to an evaluation unit (to be supplied by the customer). The resistance thermometer is fitted with a connector head for the wiring.

Information

Equipment category

Gear units for equipment category 2 are equipped with a Pt 100 resistance thermometer for measuring the oil temperature in the oil sump. Gear units for equipment category 3 can be equipped with a Pt 100 resistance thermometer for measuring the oil temperature in the oil sump.

The diagram below shows the oil temperature monitoring system on type H..V and B..V gear units:

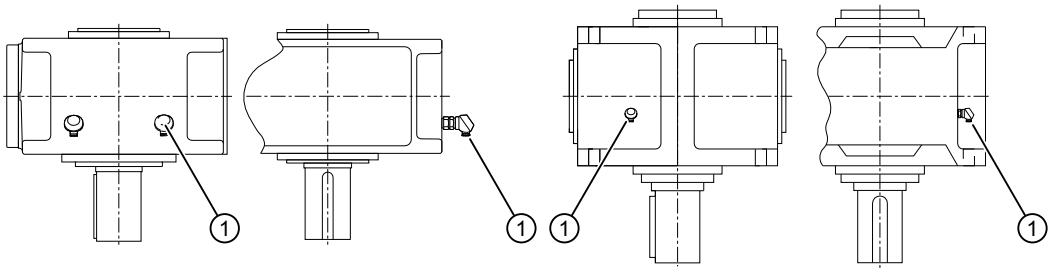

Figure 3-20: Oil temperature monitoring system for type H..V and B..V gear units

① Pt 100 resistance thermometer

A temperature monitor can be fitted in the oil sump as an alternative method of monitoring the oil temperature.

Further information

Further information and a detailed illustration of the gear unit and the position of the mounted components can be found in the dimension drawing in the complete documentation for the gear unit.

Further information about oil temperature monitoring (such as control instructions) and the technical data can be found in the operating instructions for the oil temperature monitor and in the list of equipment in the complete documentation for the gear unit.

3.15 Bearing monitoring

3.15.1 Bearing monitoring using a Pt 100 resistance thermometer

Depending on the order specification, the gear unit can be equipped with Pt 100 resistance thermometers to monitor the bearings, or prepared for the installation of such thermometers.

You must connect the Pt 100 resistance thermometer to an evaluation unit provided by the customer to be able to measure temperatures or temperature differences. The resistance thermometer has a connection head for the wiring.

Further information

Further information and a detailed illustration of the gear unit and the position of the mounted components can be found in the dimension drawing in the complete documentation for the gear unit.

Further information about bearing monitoring using a Pt 100 resistance thermometer (such as control instructions) and the technical data can be found in the operating instructions for the Pt 100 resistance thermometer and in the list of equipment in the complete documentation for the gear unit.

3.15.2 Bearing monitoring by shock-pulse transducer

Depending on the order specification, measuring nipples for monitoring the bearings can be installed on the gear unit close to the rolling-contact bearings to be monitored. Alternatively, the gear unit can be supplied with pre-machined threaded holes for installation of measuring nipples.

These measuring nipples are used to attach shock-pulse transducers through a fast-release coupling.

The following diagram shows a bearing monitoring system that uses a shock-pulse transducer:

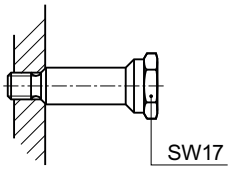

Figure 3-21: Measuring nipple

Further information

Further information and a detailed illustration of the gear unit and the position of the mounted components can be found in the dimension drawing in the complete documentation for the gear unit.

Further information about the components can be found in the component operating instructions in the complete documentation for the gear unit.

Further information about the technical data can be found in the separate data sheet or in the list of equipment in the complete documentation for the gear unit.

3.15.3 Bearing monitoring by acceleration sensor

Depending on the order specification, the gear unit can be supplied with threaded holes in which acceleration sensors can be inserted.

Further information

Further information and a detailed illustration of the gear unit with attached acceleration sensors can be found in the dimension drawing in the complete documentation for the gear unit.

For additional information on the acceleration sensors, please refer to the associated vibration sensor operating instructions:

3.16 Auxiliary drive

Introduction

For specific applications, the gear unit can be equipped with an auxiliary drive. This auxiliary drive unit enables the main gear unit to be operated at a lower output speed in the same direction of rotation. Either Flender or the customer provides the auxiliary drive. The auxiliary drive is connected to the main gear unit through an overrunning clutch. The auxiliary drive is mounted onto a connection flange, which in turn is attached to the main gear unit.

Before connecting the motor, identify the phase sequence of the three-phase mains using a phase sequence indicator. Then connect the motor so that it rotates in the defined direction.

Observe the note attached to the gear unit.

The basic configuration of the gear unit with main and auxiliary drive is shown in the following diagram.

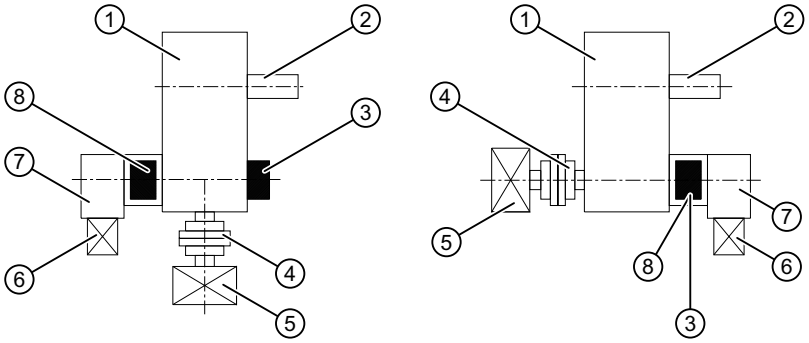

Figure 3-22: Fundamental design of gear unit with main and auxiliary drives

① Main gear unit
② Output shaft of the main gear unit
③ Backstop
④ Coupling
⑤ Main motor
⑥ Auxiliary motor
⑦ Auxiliary gear unit
⑧ Overrunning clutch

Depending on the particular application, two auxiliary drives with two different ratings are available for each gear unit size.

Auxiliary drive

The auxiliary drive is flanged to the main gear unit through an intermediate flange and coupled to the main gear unit by an overrunning clutch. The overrunning clutch is accommodated in the intermediate flange and is supplied with oil from the main gear unit. The auxiliary drive has its own oil.

Oil supply for the auxiliary gear unit

The auxiliary gear unit has its own oil circuit, which is separate from that of the main gear unit. The auxiliary gear unit is already filled with oil when delivered.

Speed monitoring

To avoid overspeeds if the overrunning clutch malfunctions, for safety reasons, customers should equip the drive combination with a speed monitoring system. The speed monitoring comprises a pulse encoder, which is mounted in the intermediate flange, and an evaluation unit.

An M18x1 threaded hole is provided at a suitable location in the intermediate flange to attach the pulse encoder – this is ordered and supplied by the customer. Dimension “x” depends on the data of the device manufacturer. The pulse encoder must be able to be mounted flush.

The speed monitoring device must be connected so that for a speed “> zero” at the output shaft of the auxiliary drive, the main drive is automatically shut down. For safety reasons, the shutdown function must be tested at regular intervals, at least four times a year. The auxiliary drive is switched on to test the shutdown function. If the speed monitor responds – checked using a warning light, for example – then the speed monitoring is functioning correctly.

⚠ WARNING

Serious injury when the auxiliary drive explosively breaks apart

If the overrunning system develops a fault, due to the high resulting speeds, the auxiliary drive can suddenly break apart explosively.

The speed monitoring function is mandatory for safety reasons.

Connecting the auxiliary drive

Before connecting the motor, identify the phase sequence of the three-phase mains using a phase sequence indicator. Then connect the motor so that it rotates in the defined direction.

Observe the note attached to the gear unit.

The diagram below shows the auxiliary drive:

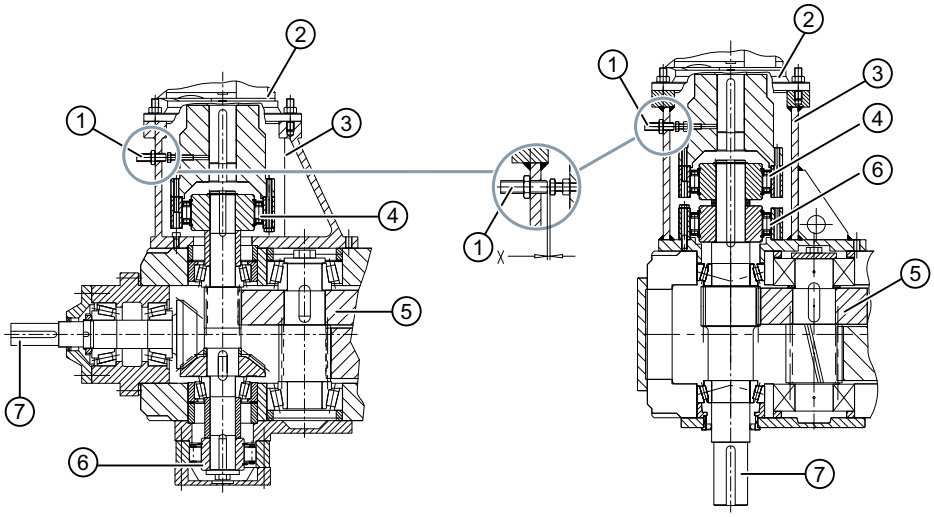

Figure 3-23: Gear unit version

① Pulse encoder for speed monitoring
② Auxiliary gear unit
③ Intermediate flange
④ Overrunning clutch
⑤ Main gear unit
⑥ Backstop
⑦ Input shaft of the main gear unit

More information

You can find further information, a detailed illustration of the gear unit and the position of the auxiliary drive in the dimension drawing in the complete documentation for the gear unit.

You can find additional information about the auxiliary drive in the auxiliary drive instructions in the complete documentation for the gear unit.

You can find the precise designation of the geared motor and the mounting position in the dimension drawings in the complete gear unit documentation.

3.16.1 Overrunning clutch

If, in addition to the main drive, you couple an auxiliary drive to the gear unit, then this coupling is realised using an overrunning clutch.

When the auxiliary drive is used to drive the gear unit, the overrunning clutch allows torque to be transferred in one direction of rotation, while "free-wheeling operation" applies when driven by the main drive.

The output shaft of the main drive rotates in the same direction of rotation, irrespective of whether the main drive is used or the auxiliary drive.

Principle of operation

The overrunning clutch as centrifugally-operated sprags. When the main gear unit rotates with the specified direction of rotation, the inner ring with the sprags rotates, while the outer ring remains stationary. Above a certain speed the sprags disengage, and the overrunning clutch operates without any wear.

When the auxiliary unit drive motor is used as drive via the outer ring, then the overrunning clutch is also driven; this means that the main gear unit is slowly rotated in the selected direction of rotation. In this case, the input shaft of the main gear unit and the main motor simultaneously also slowly rotate when a flexible coupling is used between the main motor and gear unit.

Information

Electrically interlock the main motor and the auxiliary drive motor so that only one of the two motors can be switched on.

Information

When driven by the auxiliary drive, then the input shaft of the main gear unit also slowly rotates. It is not permissible that this rotary motion is prevented. A brake located on the drive side in the main drive must be opened when driven by the auxiliary drive.

NOTICE

Damage to or destruction of the overrunning clutch

Damage to or destruction of the overrunning clutch as a result of increased wear due to operation below disengagement speeds is possible.

Regularly replace the overrunning clutch when operating the gear unit at speeds below the disengagement speed of the overrunning clutch. Data indicating the replacement intervals is provided in the dimension drawing and on a notice plate attached to the gear unit. This plate is attached to the gear unit housing near the overrunning clutch.

Oil supply for the overrunning clutch

The overrunning clutch is accommodated in an intermediate flange, and is supplied with oil from the main gear unit.

Application planning 4

4.1 Scope of delivery

The scope of delivery is listed in the shipping documents. Immediately upon receiving the gearbox, check that everything has been delivered. Report any damaged and/or missing parts to Customer Services (Page 133) immediately.

⚠ WARNING

Serious injury through defective product

Serious injury may occur.

If the gearbox exhibits any visible damage, you should not put it into operation.

4.2 Transport

General information

The gear unit is delivered fully assembled. Additional items such as shrink disks, couplings, oil coolers, pipework and valves may be delivered separately packaged, as necessary.

When transporting the gear unit, observe the following instructions to avoid damaging the gear unit:

- Always use suitable equipment to transport the gear unit.
- Transport the gear unit without oil filling and leave it in the transport packaging. Depending on the order specification, the gear unit can be shipped filled with oil. Take the extra weight into account (number of litres x 10 N) and transport the gear unit in its final mounting position.
- Do not use incorrect attachment points. The threads in the end faces of the shaft ends may not be used for attaching lifting equipment.
- Do not use the pipework to move the gear unit.
- Ensure that the lifting equipment is adequately designed to accommodate the weight of the gear unit.
- Always set the gear unit down onto a suitable base. The base must be designed such that there is no risk of damage to the gear unit or its mounted components.



⚠ WARNING

Risk of crushing

There is a risk of being crushed by a component that becomes detached because the hoisting gear and load suspension device are not suitable for handling it.

When lifting, please observe the load distribution information on the packaging.

When the product is in a raised position, transport it slowly and carefully to avoid injury to persons or damage to the gear unit.

Attaching the gear unit

To transport the gear unit, only attach slings to the marked attachment points that are provided for this purpose.

Please observe the following when attaching slings to the load or raising, lowering or moving it:

- Do not exceed the specified load limits
- If you are using a load suspension device with several load hooks, make sure that the load is evenly distributed between them
- Note the eccentric centre of gravity
- Make sure that the lifting equipment is securely attached
- Keep your speed down when moving the load
- Do not allow the load to sway and do not attach the load to objects or structures inside the building
- Loads must not be suspended from the tip of a load hook
- Always place the products down on a level, non-slip and stable base



⚠ DANGER

Falling load

There is a risk of fatal injury from falling loads if these have not been securely attached to the lifting equipment.

Never stand or sit under suspended loads. Do not exceed the load limits of the lifting equipment.

Packaging

The gear unit is delivered fully assembled. Additional equipment is also delivered separately packaged, as necessary.

The gear unit may be packed in various forms, depending on the size of the unit and method of transport.

Please adhere to the symbols applied on the packaging.

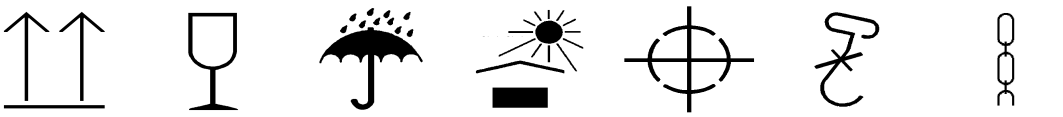

Figure 4-1: Transport symbols

4.3 Attachment points

Lifting eyes

Lifting eyes are fitted to the gear unit to assist with its transportation during manufacture and installation.

Carefully ensure that the angle of the vertical load at the gear units lifting eyes does not exceed 45°.

Sling swivels

Threads for screwing in transport lugs are provided on the gear unit to assist with its transportation during manufacture and installation.

The shear pulling must not exceed 45° when the lifting equipment is attached to sling swivels.

Eye bolts

The use of sling swivels instead of eye bolts is generally recommended.

When using eye bolts, please note that their load-bearing capacity may be reduced if they are alternately attached to different components that require moving.

It is not permitted to load eye bolts through lateral pulling contrary to the direction of the eye plane.

The following figure shows the permissible shear and lateral pulling when using eye bolts:

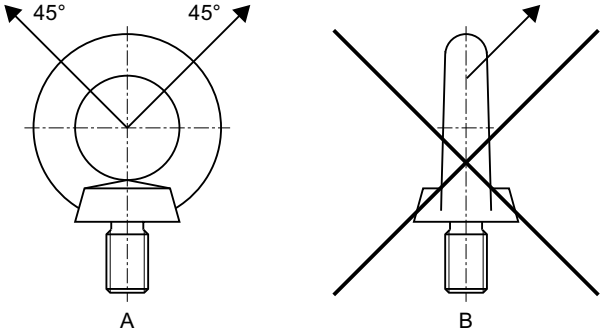

Figure 4-2: Shear and lateral pulling when using eye bolts

A Permitted shear pulling in direction of eye plane (maximum angle of 45°)

B Non-permitted lateral pulling contrary to direction of eye plane

Position of attachment points

The diagram below shows the position of the attachment points on type H..V and B..V gear units:

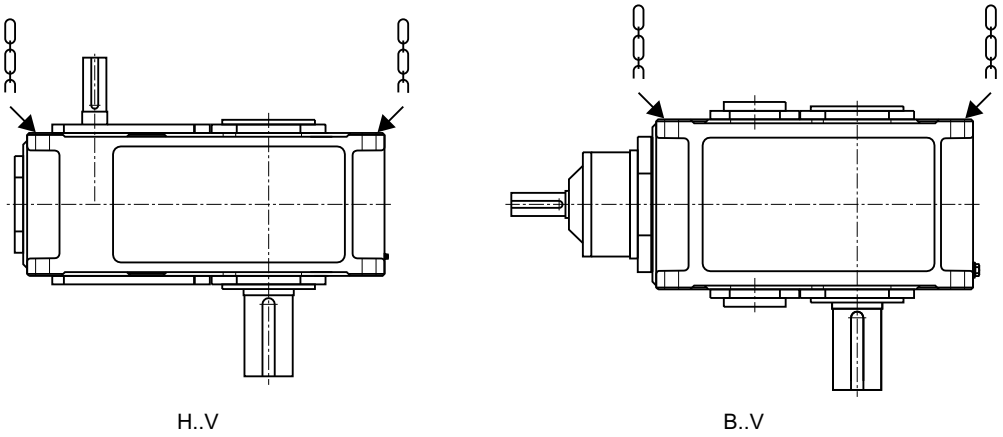

Figure 4-3: Position of the attachment points on type H..V and B..V gear units

The diagram below shows the position of the attachment points on type H..V gear units with motor:

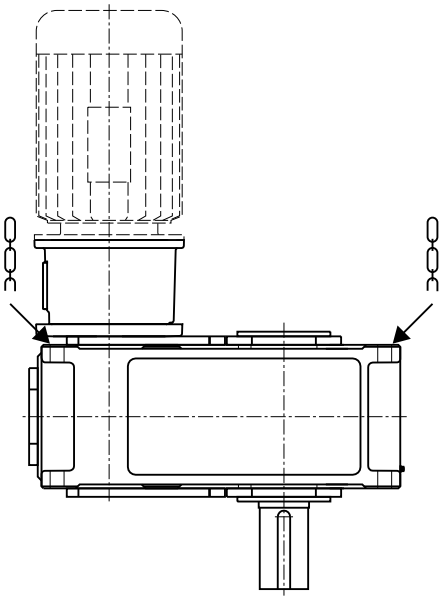

Figure 4-4: Position of the attachment points on type H..V gear units with motor

The diagram below shows the position of the attachment points on type B..V gear units with motor:

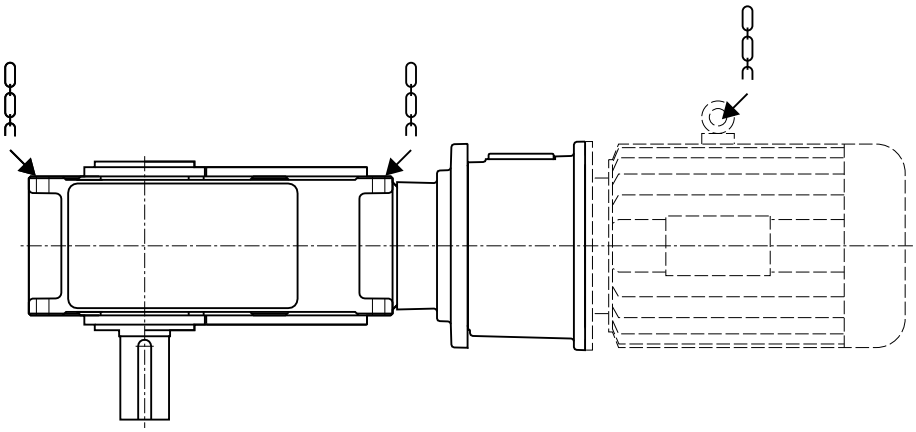

Figure 4-5: Position of the attachment points on type B..V gear units with motor

The diagram below shows the position of the attachment points on type H..V gear units in a piggyback configuration:

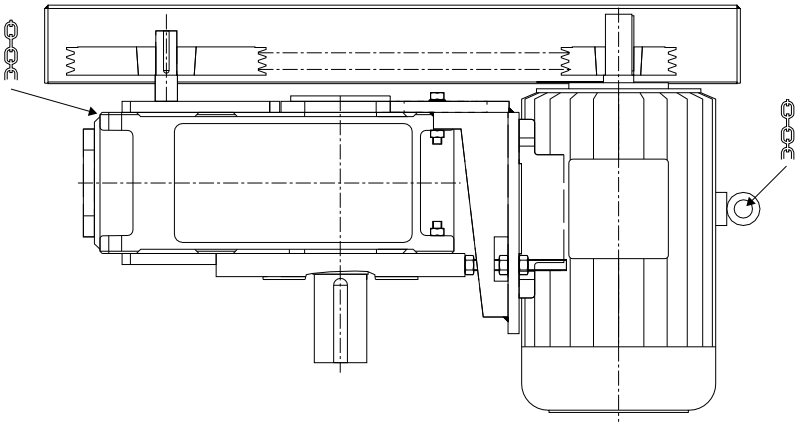

Figure 4-6: Position of the attachment points on type H..V gear units in a piggyback configuration

Drive units with additional components mounted on the gear unit (such as drive motor, coupling, etc.) may require an extra attachment point owing to the displacement in the centre of gravity caused by the mounted components.

Further information

Further information and a detailed illustration of the gear unit and the position of the attachment points can be found in the drawings in the complete documentation for the gear unit.

Assembly 5

5.1 General assembly instructions

The assembly work must be performed very carefully by authorised, trained and suitably instructed personnel. Liability will be disclaimed for damage caused by the incorrect performance of this work.

Requirements

Improper use can damage the gear unit. Be sure to take the following precautions:

- Protect the gear unit against falling objects and from becoming covered over.
- Do not perform any welding work anywhere on the drive.
- Do not use the gear unit as an earthing point for electric-welding operations.
- Use all of the fastening points fitted to the particular unit design.
- Replace any bolts that are no longer fit for use by new bolts of the same strength class and type.
- Make sure that sufficient hoisting gear is available.

Mounting position and attachment points

During the actual planning phase, be sure to allow for sufficient space around the gear unit to enable subsequent upkeep and maintenance work. Take suitable measures to ensure that unhindered convection across the housing surface is possible so that the gear unit does not overheat. Leave sufficient space to allow a free flow of air into gear units that are equipped with a fan.

Do not use incorrect attachment points (Page 53). The position of the attachment points are shown in the dimension drawing in the complete documentation for the gear unit. To ensure that the unit is properly lubricated during operation, please observe the mounting position specified in the dimension drawings.



⚠ DANGER

Danger of explosion

Danger to life through ignition of a potentially explosive atmosphere possible during assembly and disassembly work on the gear unit.

The gear unit must not be assembled or disassembled in an explosive environment.



⚠ DANGER

Danger of explosion due to gear unit heating caused by environmental effects

Danger to life through ignition of a potentially explosive atmosphere possible if gear unit becomes overheated due to environmental effects.

The gear unit must not be heated by external heat sources (exposure to direct sunlight, for example) while it is in operation and measures must be taken where necessary to protect it.

You can take the following measures to protect the gear unit against this hazard:

- A canopy to protect against the sun
- An additional cooling device
- A temperature monitoring device with shutdown function in the oil sump
- The ambient temperature range stamped on the rating plate must be complied with.

If you use a sun shield, this may cause a build-up of heat.

If you use a temperature monitoring device, it must be capable of issuing an alarm when the maximum permissible oil sump temperature is reached. It must also be capable of tripping the drive when the maximum permissible oil sump temperature is exceeded. The operator's process might be interrupted when the drive is shut down.



⚠ DANGER

Risk of explosion due to ignition of vapours emitted from solvents

There is danger to life due to ignition of vapours emitted from solvents or another explosive atmosphere when carrying out cleaning work.

It is not permissible that there is any explosive atmosphere in the area when carrying out cleaning work at the gear unit.

Please note the following:

- Ensure adequate ventilation.
- Do not smoke.

5.2 Unpacking the gear unit

Introduction

The scope of delivery is listed in the shipping documents.

⚠ WARNING

Risk of serious injury due to defective product

A defective gear unit can result in serious injury.

Do not put the gear unit into operation if any damage is visible.

Contact Customer Services (Page 133).

Requirements

Check that everything has been delivered immediately upon receipt.

NOTICE
Damage to the gear unit due to corrosion Exposing the gear unit to moisture can result in damage from corrosion. Do not damage or open the packaging prematurely if the packaging is designed to preserve the unit.

Procedure

To unpack and use the gear unit, proceed as follows:

1. Remove packaging and transport devices in accordance with regulations.
2. Perform a visual inspection for damage and accumulations of dirt.
3. Immediately report any damaged and/or missing parts to Customer Services (Page 133).
4. Dispose of packaging material and transport devices in accordance with regulations.

5.3 Gear unit assembly

5.3.1 Foundation

Properties of the foundation

The foundation must have the following properties:

- Horizontal and level
- Stability
- Designed for torsional rigidity
- Reaction forces from the gear unit must be braced

Requirements of the foundation

The foundation must meet the following requirements:

- Construct the foundation in such a way that it does not generate any resonance vibrations and that it is isolated against the transmission of vibrations from adjacent foundations.
- Design the foundation according to the relevant weight and torque, taking into account the forces acting on the gear unit.
- Align the foundation carefully with the equipment installed on the input and output sides of the gear unit.
- Take into account any elastic deformation that may be caused by operating forces.
- Install lateral stops to prevent displacement if external forces are acting on the gear unit.

NOTICE

Lack of stable foundation for the gear unit

Damage to the gear unit is possible if it is not mounted on a stable foundation.

Use bolts of at least strength class 8.8. Information and guidance on the tightening torque can be found in chapter Tightening procedure (Page 104). Tighten the fastening bolts and nuts to the specified tightening torque. When tightening the fastening bolts, make sure that the gear unit is free of mechanical stress.

Further information

Further information about dimensions, space requirements and arrangement of supply connections can be found in the complete documentation for the gear unit.

5.3.2 Description of assembly work

5.3.2.1 Introduction

Measures to be taken prior to assembly



⚠ CAUTION

Risk of chemical burns from chemical substances

There is a risk of chemical burns when handling aggressive cleaning agents.

Please observe the manufacturer's instructions on how to handle cleaning agents and solvents. Wear suitable protective equipment (gloves, safety glasses). Remove any spilled solvent immediately with binding agents.



⚠ WARNING

Risk of burns

There is a risk of serious burn injury from hot surfaces (> 55 °C).

Wear appropriate protective gloves and protective clothing.

Improper use can damage the gear unit. Take the following precautions:

- Use a suitable cleaning agent to remove the corrosion protection from the shafts and mounting surfaces.
- Do not allow the cleaning agent to come into contact with the shaft sealing rings.
- Use a fitting tool to mount the input and output elements (e.g. coupling components) onto the shafts and lock them securely.
- Do not use force (hammer blows, etc.) to fit the coupling components as this can cause internal damage to the gear unit.
- Take care not to damage the shaft sealing rings or shaft running surfaces when fitting the coupling components.

- If the input and output elements must be heated before assembly, the joining temperatures required are listed in the dimension drawings in the coupling operating instructions.
- Unless otherwise specified, heat the coupling parts with an induction heater, a torch or in an oven.
- Use heat shields designed to protect against radiant heat in order to safeguard the shaft sealing rings against damage or heating to above 100 °C.
- The elements must be quickly pulled onto the shaft as far as stated in the dimension drawing prepared in accordance with order specifications.
- Use suitable hoisting gear to place the gear unit in position.

NOTICE

Poor alignment

Damage to the gear unit or individual components due to poor alignment is possible.

When installing and mounting the drives, ensure that the individual components are precisely aligned with one another.

Inadmissibly high alignment errors of the shaft ends to be connected as a result of angular or axial offset result in premature wear and material damage. Base frames or substructures that are too soft can cause the coupling parts to become radially or axially displaced during operation. This displacement is not measurable when the drive is at a standstill.

The following figure shows the gap dimension at the grease labyrinth:

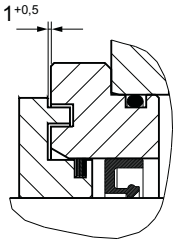

Figure 5-1: Gap dimension at grease labyrinth



⚠ DANGER

Potentially explosive atmosphere can be ignited

Sparking or inadmissible temperature rise due to insufficient gap dimension might result in the ignition of a potentially explosive atmosphere.

In the case of a shaft seal with Taconite seals, ensure that the set gap dimension of $1^{+0.5}$ mm on the grease labyrinth is not changed when the input and output elements (e.g. coupling parts) are mounted. Rotating and stationary parts must not touch.

More information

Further information about removing the corrosion protection can be found in the instructions 7300 in the complete documentation for the gear unit.

Further information about attaching gear units to hoisting gear in cases where the gear unit weight necessitates the use of hoisting gear can be found in chapter Application planning (Page 53).

If the gear unit is to be transported with mounted parts and components, then it may be necessary to use additional attachment points. The position of these attachment points can be found in the dimension drawing in the complete documentation for the gear unit.

5.3.2.2 Alignment

Introduction

Depending on the order specification, the top of the housing has machined surfaces (alignment surfaces) to assist with provisional alignment of the gear unit in the horizontal direction.

⚠ DANGER

Risk of fatal injury from flying fragments

Failure to align the unit with the required degree of accuracy can cause the shaft to rupture. A ruptured shaft can result in serious or even fatal injuries.

Align the gear unit exactly so that it conforms to the specified alignment values.

Damage to the gear unit or its components or mounted parts is possible.

The accuracy of the alignment between the shaft axes largely determines the service life of the shafts, bearings and couplings. Please therefore always endeavour to achieve zero deviation in the alignment of the shaft axes (does not apply to ZAPEX couplings or cardan shafts). In this context, please also refer to the relevant operating instructions for further information about, for example, the requirements of couplings.

Procedure

The gear unit can be equipped with alignment threads in the housing feet to make it simpler to align.



Figure 5-2: Alignment surface

To align the gear unit by its alignment surface, proceed as follows:

1. For the precise position of the alignment surfaces, refer to the dimension drawings in the complete documentation.
2. Note the values inscribed in the alignment surfaces.
3. Use these surfaces as a guide for aligning the gear unit horizontally to ensure that it will run smoothly.

The following diagram shows the alignment surfaces at the gear unit:

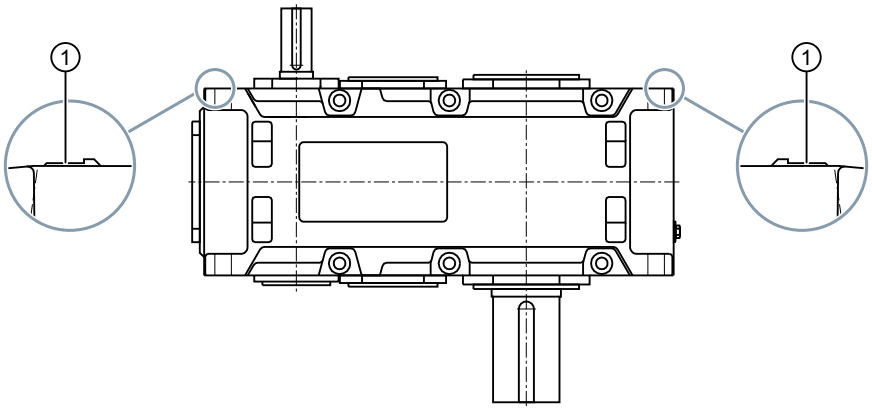

Figure 5-3: Alignment surfaces

① Alignment surfaces

Further information

Further information and a detailed illustrated description of the gear unit can be found in the dimension drawing in the complete documentation for the gear unit.

Tools

The following tools are needed to perform the final fine alignment (Page 96) work on the shaft axes of the gear unit and the equipment installed on the input and output sides.

- Rulers
- Spirit level
- Dial gauge
- Laser alignment system
- Feeler gauge etc.

Once the gear unit is finely aligned, tighten the foundation bolts and check the settings again. Record the alignment dimensions and keep the report in a safe place together with these operating instructions.

5.3.3 Gear unit assembly on housing foot

5.3.3.1 Installation on a foundation frame

Requirements

The following requirements must be fulfilled before the assembly work commences:

- The foundation must be horizontal and level.
- When tightening the fastening bolts, make sure that the gear unit is free of mechanical stress.

NOTICE

Poor stability

Damage to the gear unit is possible if it is not mounted on a stable foundation.

Make sure that the foundation frame is horizontal and level. It is particularly important that the surface on which the gear unit is mounted is level because this determines the contact pattern of the teeth and the load on the bearings, and so has an influence on the service life of the gear unit. All points on the gear unit mounting surface must lie between two imaginary parallel planes that are 0.1 mm per 1 m apart.

Design the foundation frame according to the relevant weight and torque, taking into account the forces acting on the gear unit. The feet of the gear unit must be properly supported. Base frames or substructures that are too soft can result in radial or axial displacement during operation. This displacement is not measurable when the drive is at a standstill.

Procedure

To install the gear unit on a foundation frame, proceed as follows:

1. Clean the underside of the gear unit feet.
2. Use suitable hoisting gear to set the gear unit down on the foundation frame.
3. Tighten the foundation bolts to the specified tightening torque (Page 105). If necessary, install stops to prevent displacement.
4. Align the gear unit precisely with the input and output equipment (Page 64).
5. Record the alignment dimensions.
6. Keep the report in a safe place together with these operating instructions.

NOTICE

Damage caused by unevenly tightening the fastening bolts

The gear unit can be damaged by unevenly tightening the fastening bolts.

Evenly tighten the fastening bolts. When tightening the fastening bolts, make sure that the gear unit is free of mechanical stress.

5.3.3.2 Mounting on a concrete foundation using stone bolts or foundation blocks

Requirements

The lower side of the gear unit mounting feet must be clean.

Mounting a gear unit using stone bolts

The following diagram shows a stone bolt:

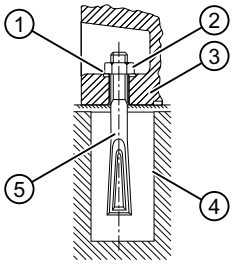

Figure 5-4: Stone bolt

① Washer
② Hexagon nut
③ Gear unit foot
④ Foundation
⑤ Stone bolt

Proceed as follows to mount the gear unit using stone bolts:

1. Attach the stone bolts with washers and hexagon nuts in the foundation mounting points in the gear unit housing.
2. Using a suitable crane or lifting gear, place the gear unit down on the concrete foundation.
3. Align the gear unit so that the input and output shafts are horizontal using shims (Page 64).
4. For higher external forces, if necessary, use lateral stops to prevent the gear unit shifting.
5. Pour concrete into the recesses in the concrete foundation for the stone bolts.
6. After the concrete has set, tighten the hexagon nuts of the stone bolts with the specified tightening torque (Page 105).
7. Record the alignment dimensions and keep the report in a safe place together with these operating instructions.

NOTICE

Damage caused by unevenly tightening the hexagon nuts

The gear unit can be damaged by unevenly tightening the hexagon nuts.

Evenly tighten the hexagon nuts. Ensure that the gear unit is not deformed or distorted when tightening the fastening bolts.

Mounting gear units using foundation blocks

The following diagram shows a foundation block:

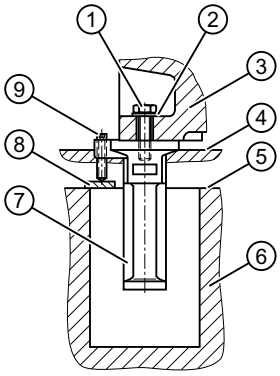

Figure 5-5: Foundation block

① Fastening bolt	⑥ Foundation
② Washer	⑦ Foundation block
③ Gear unit foot	⑧ Flat steel plate
④ Height of the completed foundation	⑨ Set screw
⑤ Height of the prepared foundation	

Proceed as follows to mount the gear unit using foundation blocks:

1. Attach the foundation blocks with washers and fastening bolts in the foundation mounting points in the gear unit housing.
2. Tighten the fastening bolts until the housing feet are lying flat on the foundation blocks.
3. Using a suitable crane or lifting gear, place the gear unit down on the concrete foundation.
4. Align the gear unit so that the input and output shafts are horizontal using the set screws (if available) (Page 64).
5. For higher external forces, if necessary, use lateral stops to prevent the gear unit shifting.
6. Before casting the foundation, close the openings in the foundation blocks using a suitable material (e.g. using polystyrene).
7. Pour concrete into the recesses in the concrete foundation for the foundation blocks.
8. After the concrete has set, tighten the fastening bolts of the foundation blocks with the specified tightening torque (Page 105).
9. Record the alignment dimensions and keep the report in a safe place together with these operating instructions.

NOTICE

Damage caused by unevenly tightening the fastening bolts

The gear unit can be damaged by unevenly tightening the fastening bolts.

Evenly tighten the fastening bolts. Ensure that the gear unit is not deformed or distorted when tightening the fastening bolts.

5.3.3.3 Mounting on a concrete foundation using anchor bolts

Requirements

The lower side of the gear unit mounting feet must be clean.

Inserting the anchor bolt

The following diagram shows the inserted anchor bolt:

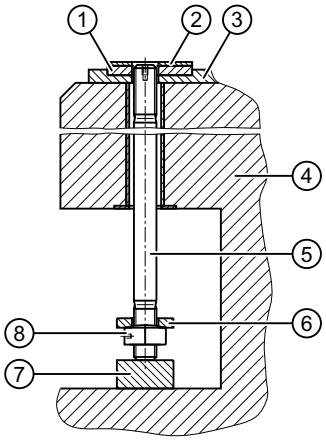

Figure 5-6: Inserted anchor bolt

① Baseplate	⑤ Anchor bolt
② Support	⑥ Pressure plate
③ Fine-grout concrete	⑦ Wood
④ Raw foundation	⑧ Hexagon nut

Proceed as follows to insert the anchor bolt:

1. Place the support on the baseplate embedded in the fine-grout concrete.
2. Insert the anchor bolt.
3. Attach the pressure plate and tighten the nuts.
4. Place a piece of wood under the anchor bolt so that it is approximately 10 mm from the upper edge of the support.
5. Using suitable lifting gear, set the gear unit down in position.

Mounting the gear unit using anchor bolts

The following diagram shows a tightened anchor bolt:

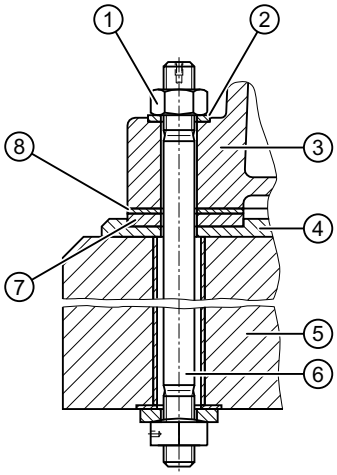

Figure 5-7: Tightened anchor bolt

①	Hexagon nut	⑤	Raw foundation
②	Washer	⑥	Anchor bolt
③	Housing foot	⑦	Baseplate
④	Fine-grout concrete	⑧	Support

Proceed as follows to mount the gear unit using anchor bolts:

1. Pull the anchor bolts upwards. To do this you can use a screw or threaded bar that you screw into the thread on the end face.
2. Attach the washer.
3. Screw on the hexagon nut by hand a few turns.
4. Align the gear unit with the supports (Page 64).
   - Observe the values on the alignment strips.
   - Maintain the alignment tolerances to the units connected at the input and output according to the permissible angular and axial displacements of the couplings.
5. Document the alignment dimensions in the form of a report, and archive this together with these instructions.
6. Keep the anchor bolts in their position by tightening the nuts by hand.
7. Locate the protective sleeve.
8. Attach the hydraulic clamping device.
9. Tighten the screws alternating, taking into account the preload forces (Page 105).
10. Tighten the hexagon nuts to their end stops using a suitable tool.
11. Document the tensioning pressures and preload forces, and archive this report together with these instructions.

⚠ CAUTION

Incorrect use of the preload tool

Incorrectly using the preload tool can result in injury.

To ensure correct handling and adjustment of the preload tool, you must carefully comply with the instructions provided in the manufacturers operating instructions for the preload tool.

NOTICE

Inadequate concrete hardness and strength

Damage caused by inadequate stability of the gear unit as a result of inadequate concrete hardness and strength is possible.

The fine-grout concrete must be allowed to harden for at least 28 days before tensioning the anchor bolts.

5.3.4 Mounting on a mounting flange or block flange

5.3.4.1 Mating flange on the machine side

Measures to be taken prior to assembly

Be sure to take the following precautions before mounting the mating flange on the machine side:

- Design and construct the mating flange so that no resonant vibration occurs - and no shock and vibration can be transmitted from adjacent foundations.
- The mating flange assembly that is to be mounted on the gear unit must be torsionally stiff.
- Design the mating flange assembly according to the relevant weight and torque, taking into account the forces acting on the gear unit.
- Very carefully align the units connected at the input - and output - and take into account, where relevant, any elastic deformation as a result of the operational forces.

Poor alignment

The gear unit can be damaged as a result of poor mating flange alignment.

The mating flange must be absolutely horizontal and level. When tightening the fastening bolts, make sure that the gear unit is free of mechanical stress.

NOTICE

Poor stability

Damage to the gear unit is possible if it is not mounted on a stable foundation.

Tighten the fastening bolts and nuts to the specified tightening torque (Page 105).

Always use bolts with a strength class (property class) of 8.8.

Further information

You can find additional information on dimensions, space requirement and arrangement of the supply connections (for example, separately supplied oil cooling systems) in the dimension drawings in the complete documentation for the gear unit.

5.3.4.2 Assembly

Requirements

Before commencing with the assembly work, make sure that you have done the following:

- A centring shoulder (∅ d_3) is provided on the mounting or block flange on the output side on gear units with a solid shaft on the output side. Machine a bore that matches this centring shoulder in the mating flange on the machine side. Detailed specifications for the centring shoulder and the bore can be found in the dimension drawing in the complete documentation for the gear unit.
- A centring shoulder (∅ d_3) is provided on the mounting or block flange on the output side on gear units with a hollow shaft on the output side. Proceed as follows:
  - If the machine shaft is supported by bearings at one end only, machine a bore that matches this centring shoulder in the mating flange on the machine side. The gear unit assumes the function of the second bearing support point. Detailed specifications for the centring shoulder and the bore can be found in the dimension drawing in the complete documentation for the gear unit.
  - If the machine shaft is located in two bearings in the mating flange on the machine side, centring the gear unit (centring shoulder ∅ d_3) in the mating flange is not permissible (due to redundancy).
- When aligning the machine shaft with the mating flange, keep the radial and angular misalignment as low as possible.
- The area around the face of the mounting and mating flanges must be absolutely free of any grease. The reliability with which torque is transmitted depends to a large extent on this.
- Do not use any contaminated solvents or soiled cleaning cloths, nor any cleaning agents that contain oil (such as petroleum or turpentine) to degrease the surfaces.
- The transmittable gear unit torque is restricted by the bolted connection on the hole circle K_1.

⚠ DANGER

Risk of fatal injury from flying fragments

Non-adherence to the alignment accuracy can result in a broken shaft and as a consequence risk to life and injury.

Align the gear unit exactly so that it conforms to the specified alignment values.

Damage to the gear unit or its components or mounted parts is possible.

The service life of the shafts and rolling-contact bearings essentially depends on the alignment accuracy of the machine shaft to the mating flange. As a consequence, always try to achieve a zero deviation.

⚠ CAUTION

Risk of injury due to chemical substances

Observe the manufacturer's guidelines on how to handle lubricants and solvents.

Wear suitable protective clothing.

NOTICE

Damage to the gear unit by uneven tightening of the flange bolts

The gear unit can be damaged by unevenly tightening the flange bolts.

Tighten the flange bolts diagonally to the specified torque. When tightening the flange bolts, make sure that the gear unit is free of mechanical stress.

Procedure

Proceed as follows to install the gear unit:

1. Clean the contact surfaces of the mounting or block flange of the gear unit and the mating flange on the machine side.
2. Inspect the shaft for damaged bearing seats and edges. If necessary, rework the components with an appropriate tool and then clean them again.
3. Using suitable lifting gear, set the gear unit down on the mating flange on the machine side.
4. For gear units with hollow shafts, follow the assembly instructions given in chapter Shaft-mounted gear unit with hollow shaft (Page 77).
5. If necessary, make sure that the locating spigots of the flanges are interlocked.
6. Tighten the flange bolts diagonally and evenly to the specified torque. Please refer to Tightening torques and preload forces (Page 105) for the correct tightening torque. Always use bolts with a strength class (property class) of at least 8.8.

NOTICE

Damage caused by centring the gear unit in the mating flange

The gear unit can be damaged by centring the gear unit (centring shoulder ∅ d_3) in the mating flange.

With a hollow shaft on the output side and a machine shaft that is also located in two bearings in the mating flange on the machine side, centring the gear unit (centring shoulder ∅ d_3) in the mating flange is not permissible (due to redundancy).

Further information

You will find more information about permissible tolerances in the relevant operating instructions in the complete documentation for the gear unit.

5.3.4.2.1 Gear units with solid shaft on the output side

The diagram below shows gear units with a solid shaft on the output side:

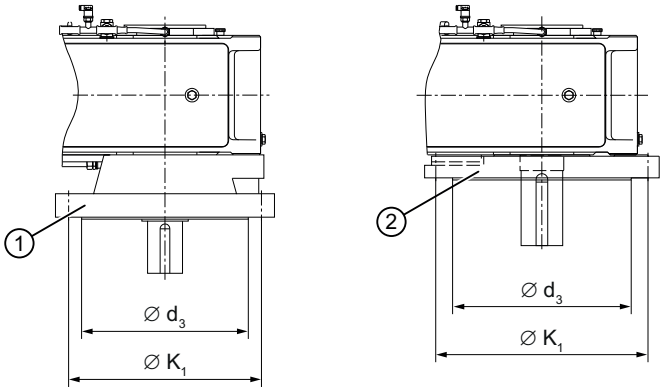

Figure 5-8: Gear units with solid shaft on the output side

① Mounting flange ② Block flange

5.3.4.2.2 Gear units with a hollow shaft on the output side

The diagram below shows gear units with a hollow shaft on the output side:

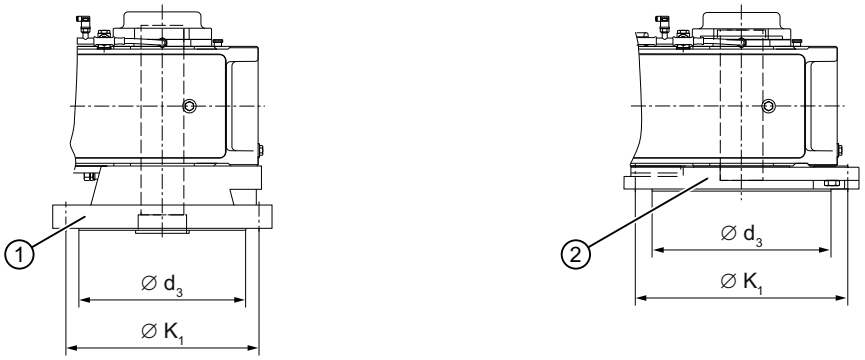

Figure 5-9: Gear units with a hollow shaft on the output side

① Mounting flange ② Block flange

Axial locking

Depending on the version, lock the hollow shaft axially on the machine shaft (e.g. by a locking ring, end plate, adjusting screw).

5.3.4.3 Dismantling

Measures prior to dismantling

NOTICE

Damage to the gear unit due to skewing

The gear unit can become damaged if it skews during dismantling.

Do not allow the gear unit to skew when you remove it from the machine shaft. When removing the gear unit using hydraulic pulling equipment, excessive force can be placed on the housing, rolling-contact bearings and other gear unit components. Always check the hollow shaft bearings for damage before reattaching the gear unit to the machine shaft.

Information

Reducing the risk of corrosion

When using jacking screws or screw spindles, round off and grease the end of the thread (head) that presses against the driven machine to avoid the risk of corrosion.

Procedure

To dismantle the gear unit with mounting and block flange from the machine shaft, proceed as follows:

1. Secure the gear unit in position.
2. Remove the flange bolts.
3. For gear units with hollow shafts, follow the dismantling instructions given in chapter Shaft-mounted gear unit with hollow shaft (Page 77).

5.3.5 Mounting the torque arm for the gear unit housing

5.3.5.1 Mounting the torque arm

For all shaft-mounted gear units, absorb the reaction torque corresponding to the torque of the machine – and which acts in an opposite direction at the housing.

5.3.5.2 Mounting the torque arm

NOTICE

Damage to the gear unit due to incorrect mounting of the motor and torque arm

Damage to the gear unit due to incorrect mounting of the motor and torque arm is possible

The motor and torque arm may only be mounted after prior consultation with Flender. Mount the torque arm to the machine side without causing any distortion or deformation.

Mount the torque arm to the machine side in such a way that it is free of mechanical stress.

The diagram below shows the torque arm for the gear unit housing:

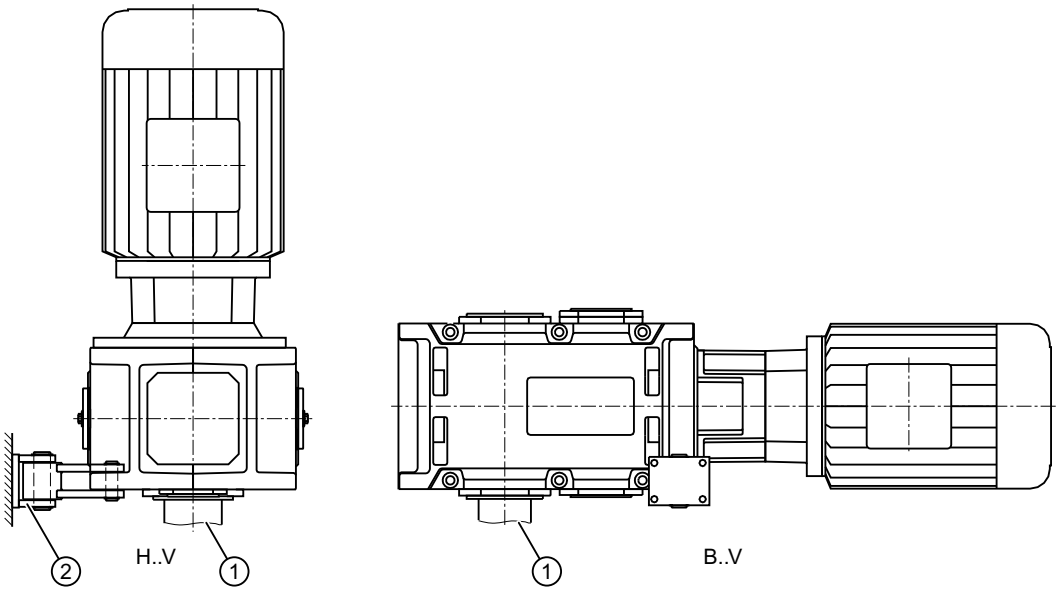

Figure 5-10: Torque arm for the gear unit housing

① Machine side ② Elastic pedestal

The following table lists the motor assignment for the housing support:

Gear unit size	Largest permissible standard motor for the relevant gear unit type					
	H2	H3	H4	B2	B3	B4
1	-	-	-	112	-	-
2	-	-	-	132	-	-
3	200	-	-	180	180	-
4	225	-	-	200	200	-
5 ... 6	250	250	-	225	225	-
7 ... 8	315M	315M	180	280	280	200
9 ... 10	315M	315M	225	280	280	225
11 ... 12	315M	315M	250	315M	315M	280
13 ... 14	355	355	315M	355	355	315M
15 ... 16	-	355	315	-	355	355M
17 ... 18	-	355	355M	-	355	355
19 ... 22	On request					

Table 5-1: Motor assignment for housing support

Larger motors may be mounted only after consultation with Flender.

Further information

Further information about constructing the foundation for gear units with a torque arm can be found in chapter Foundation (Page 61).

5.4 Shaft-mounted gear unit with hollow shaft

5.4.1 Shaft-mounted gear unit with hollow shaft and parallel keyway

Introduction

The shaft end of the driven machine shaft (material C60+N or higher strength) must have a parallel key as defined by DIN 6885, Part 1, form A. Furthermore, it should have a hole centred in its end face as defined by DIN 332, form DS (with thread). The connection dimensions for the driven machine shaft can be found in the dimension drawing in the complete documentation.

5.4.1.1 Preparations

To facilitate removal (Page 80), Flender recommends that you insert a pressurized oil connection into the shaft end of the driven machine until it is flush with the bore of the hollow shaft. This connector can also be used to feed in rust remover. Failure to heed this recommendation shall not impose any liability on the plant constructor vis-à-vis the plant operator.

The following diagram illustrates the preparations required for gear units with a hollow shaft and parallel keyway:

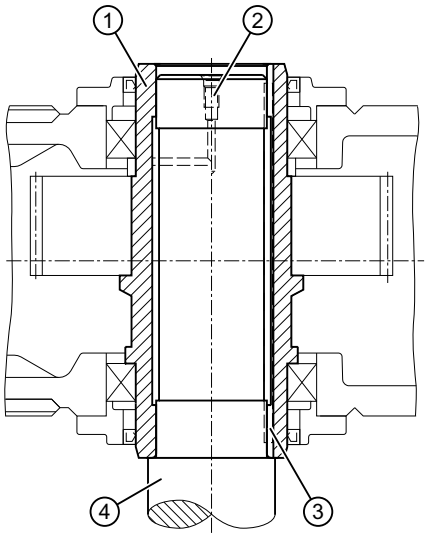

Figure 5-11: Gear unit with a hollow shaft and parallel keyway

① Hollow shaft
② Pressure oil connector
③ Parallel key
④ Machine shaft

5.4.1.2 Assembly

Measures to be taken prior to assembly

⚠ CAUTION

Risk of injury due to chemical substances

Observe the manufacturer's guidelines on how to handle lubricants and solvents.

Wear suitable protective clothing.

Improper use can damage the gear unit. Be sure to take the following precautions:

- Use a suitable cleaning agent to remove the corrosion protection from the hollow shaft and the machine shaft.
- Inspect the hollow and machine shafts for damaged seats and edges.
- If necessary, rework the components with an appropriate tool and then clean them again.
- Apply an appropriate lubricant to the contact surfaces to protect them against fretting corrosion.

NOTICE

Risk of damage to shaft sealing rings from cleaning agent

Aggressive chemical cleaning agents may cause damage to shaft sealing rings.

Do not allow the cleaning agent to come into contact with the shaft-sealing rings.

5.4.1.2.1 Mounting

Procedure

NOTICE

Damage to the gear unit

The gear unit can become damaged if it skews during assembly.

The hollow shaft must be flush with the machine shaft during assembly of the gear unit on the machine shaft. Do not allow the gear unit to skew.

NOTICE

Damage to the rolling-contact bearings

The rolling-contact bearings can become damaged if the gear unit skews during mounting.

The hollow shaft may be mounted on a machine shaft shoulder only if the gear unit features one of the following:

- Torque arm
- Elastic pedestal
- Supported by gear unit swing base

Proceed as follows to install the gear unit:

1. Use suitable hoisting gear to lift the gear unit.
2. Mount the gear unit using the nut and threaded spindle.
   The gear unit is braced by the hollow shaft.

The diagram below shows the mounting process with screw spindle for gear units with a hollow shaft and parallel keyway:

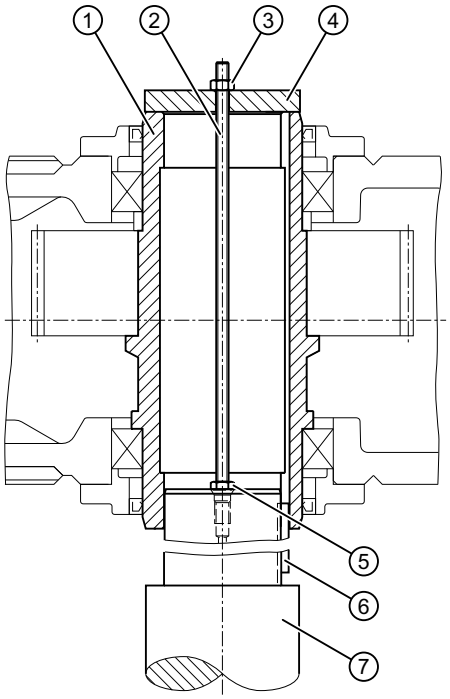

Figure 5-12: Mounting process with screw spindle

① Hollow shaft
② Screw spindle
③ Nut
④ End plate
⑤ Nut
⑥ Parallel key
⑦ Machine shaft

Hydraulic pulling equipment can be used instead of the nut and screw spindle shown in the diagram.

5.4.1.2.2 Axial locking

Depending on the version, lock the hollow shaft axially on the machine shaft (e.g. by a locking ring, end plate, adjusting screw).

5.4.1.3 Dismantling

Measures prior to dismantling

NOTICE

Damage to the gear unit due to skewing

The gear unit can become damaged if it skews during dismantling.

Do not allow the gear unit to skew when you remove it from the machine shaft. When removing the gear unit using hydraulic pulling equipment, excessive force can be placed on the housing, bearings and other gear unit components. Always check the hollow shaft bearings for damage before reattaching the gear unit to the machine shaft.

Information

Reducing the risk of corrosion

When using jacking screws or screw spindles, round off and grease the end of the thread (head) that presses against the driven machine to avoid the risk of corrosion.

Procedure

In order to dismantle a shaft-mounted gear unit from the machine shaft, proceed as follows:

1. Secure the gear unit in position.
2. Remove the axial locking element from the hollow shaft.
3. If fretting corrosion has formed on the seat surfaces, rust remover must be applied so that the gear unit can be more easily detached. The rust remover can be pumped in through the pressure oil connector.
4. Wait for the rust remover to work and then use suitable gear to lift the gear unit and dismantle it using a fixture.
5. Depending on the conditions on site, you can use one of the following methods to remove the gear unit from the machine shaft:
   - With jacking screws in an end plate
   - With a central screw spindle
   - Using hydraulic pulling equipment

The following diagram shows the dismantling procedure using an end plate for gear units with a hollow shaft and parallel keyway:

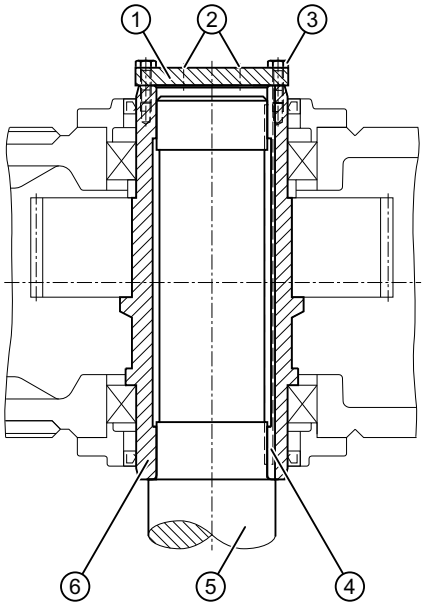

Figure 5-13: Dismantling using an end plate

① End plate for pressing out
② Jacking screws
③ Bolts
④ Parallel key
⑤ Machine shaft
⑥ Hollow shaft

The following diagram shows the dismantling procedure using hydraulic pulling equipment for gear units with hollow shaft and parallel keyway:

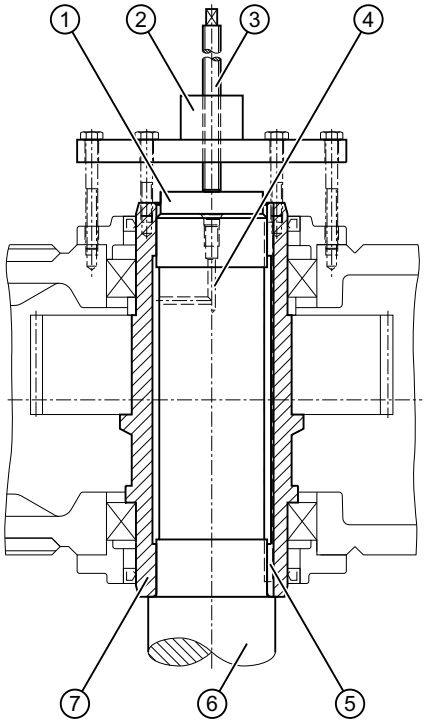

Figure 5-14: Dismantling using hydraulic pulling equipment

① Auxiliary plate for pressing out
② Hydraulic pulling equipment
③ Screw spindle
④ Pressure oil connector
⑤ Parallel key
⑥ Machine shaft
⑦ Hollow shaft

End plate and auxiliary plate

The end plate and auxiliary plate for removing the gear unit are not supplied as standard with the gear unit.

Threaded holes at the face sides of gear unit hollow shafts

Both end faces of the hollow shaft have threaded holes for attaching the end plate to the shaft.

The following diagram shows a hollow shaft with parallel keyway:

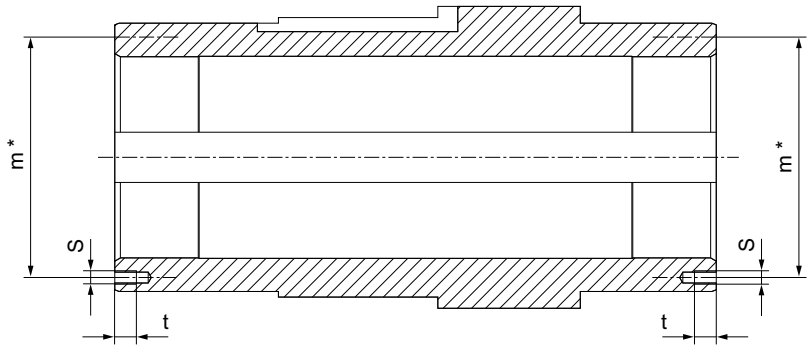

Figure 5-15: Hollow shaft with parallel keyway

*) 2 threads offset through 180 °

Refer to the following table for the dimensions of the threaded holes at the face sides of standard gear unit hollow shafts:

Gear unit size	m in mm	s	t in mm	Gear unit size	m in mm	s	t in mm
3	-	-	-	12	215	M12	19.5
4	95	M8	14.5	13	230	M12	19.5
5	115	M8	14.5	14	250	M12	19.5
6	125	M8	14.5	15	270	M16	24
7	140	M10	17	16	280	M16	24
8	150	M10	17	17	300	M16	24
9	160	M10	17	18	320	M16	24
10	180	M12	19.5	≥ 19	On request		
11	195	M12	19.5				

Table 5-2: Dimensions for the threaded holes at the face sides of standard gear unit hollow shafts

Further information

You will find further information and a detailed illustration of the threaded holes in the dimension drawing, which is part of the complete documentation of the gear unit.

Maximum forcing pressures

NOTICE

Damage to the gear unit housing or other gear unit components

The gear unit housing or other gear unit components might sustain damage if forcing pressures in excess of the maximum specified values are applied.

When removing a gear unit that is not only supported at the hollow shaft, but also at the housing, the forcing pressures specified in the tables below must not be exceeded. The hollow shaft bearings must always be checked for damage before the gear unit is attached to the machine shaft.

Refer to the following table for the maximum forcing pressures:

Gear unit size	Maximum forcing pressures in N	Gear unit size	Maximum forcing pressures in N
3	15 200	12	113 600
4	22 600	13	140 000
5	33 000	14	160 000
6	37 500	15	193 000
7	50 000	16	215 000

Gear unit size	Maximum forcing pressures in N	Gear unit size	Maximum forcing pressures in N
8	56 000	17	240 000
9	65 000	18	266 000
10	82 000	≥ 19	On request
11	97 200		

Table 5-3: Maximum forcing pressures

5.4.2 Shaft-mounted gear unit with hollow shaft and spline according to DIN 5480

Introduction

The end of the driven machine shaft (material C60+N or higher strength) must have a spline according to DIN 5480. Furthermore, it should have a hole centred in its end face as defined by DIN 332, form DS (with thread). The connection dimensions for the driven machine shaft can be found in the dimension drawing in the complete documentation.

5.4.2.1 Preparations

To facilitate removal (Page 88), Flender recommends that you insert a pressurized oil connection into the shaft end of the driven machine until it is flush with the bore of the hollow shaft. This connector can also be used to feed in rust remover. Failure to heed this recommendation shall not impose any liability on the plant constructor vis-à-vis the plant operator.

The following diagram shows the preparation for gear units with hollow shaft and spline:

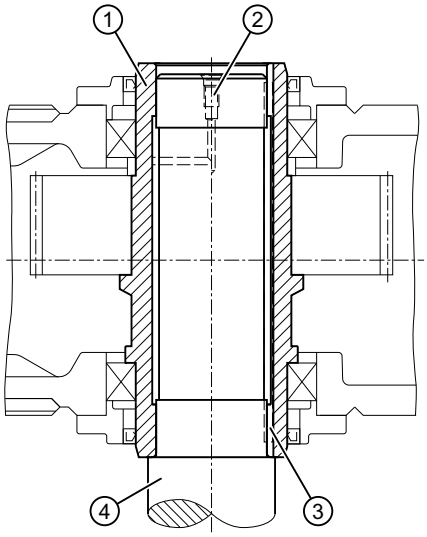

Figure 5-16: Preparation for gear units with hollow shaft and spline

① Pressure oil connector
② DU bushing
③ Machine shaft
④ Hollow shaft

5.4.2.2 Assembly

Measures to be taken prior to assembly

⚠ CAUTION

Risk of injury due to chemical substances

Observe the manufacturer's guidelines on how to handle lubricants and solvents.

Wear suitable protective clothing.

Improper use can damage the gear unit. Be sure to take the following precautions:

- Use a suitable cleaning agent to remove the corrosion protection from the hollow shaft and the machine shaft.
- Inspect the hollow and machine shafts for damaged seats and edges.
- If necessary, rework the components with an appropriate tool and then clean them again.
- Apply an appropriate lubricant to the contact surfaces to protect them against fretting corrosion.

NOTICE

Risk of damage to shaft sealing rings

Aggressive chemical cleaning agents may cause damage to shaft sealing rings.

Do not allow the cleaning agent to come into contact with the shaft-sealing rings.

5.4.2.2.1 Pulling on with integrated DU bushing

Procedure

NOTICE

Damage to the gear unit

The gear unit can become damaged if it skews during assembly.

When mounting the gear unit, make sure that the hollow shaft and machine shaft are aligned and ensure that the machine shaft splines and hollow shaft splines match up. You can identify the correct spline position by rotating the input shaft or gently swivelling the gear unit on the hollow shaft.

NOTICE

Damage to the rolling-contact bearings

The rolling-contact bearings can become damaged if the gear unit skews during mounting.

The hollow shaft may be mounted on a machine shaft shoulder only if the gear unit features one of the following:

- Torque arm
- Elastic pedestal
- Supported by gear unit swing base

Proceed as follows to mount the gear unit with integrated DU bushing:

1. Use suitable hoisting gear to lift the gear unit.
2. Mount the gear unit using the nut and threaded spindle.
   The gear unit is braced by the hollow shaft.

The following diagram shows the mounting process with integrated DU bushing for gear units with a hollow shaft and spline:

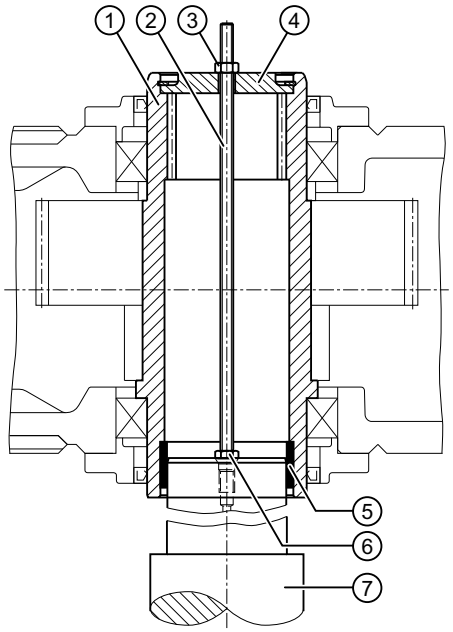

Figure 5-17: Pulling on with integrated DU bushing

① Hollow shaft
② Screw spindle
③ Nut
④ End plate
⑤ DU bushing
⑥ Nut
⑦ Machine shaft

Hydraulic pulling equipment can be used instead of the nut and screw spindle shown in the diagram.

5.4.2.2.2 Mounting with DU bushing as a separate component

Procedure

NOTICE

Damage to the gear unit

The gear unit can become damaged if it skews during assembly.

When mounting the gear unit, make sure that the hollow shaft and machine shaft are aligned and ensure that the machine shaft splines and hollow shaft splines match up. You can identify the correct spline position by rotating the input shaft or gently swivelling the gear unit on the hollow shaft.

NOTICE

Damage to the rolling-contact bearings

The rolling-contact bearings can become damaged if the gear unit skews during mounting.

The hollow shaft may be mounted on a machine shaft shoulder only if the gear unit features one of the following:

- Torque arm
- Elastic pedestal
- Supported by gear unit swing base

Proceed as follows to mount the gear unit with hollow shaft and spline onto the driven machine shaft with a DU bushing as a separate component:

1. Use suitable hoisting gear to lift the gear unit.
2. Push the separately supplied DU bushing onto the machine shaft.
3. Use a ratchet tie to tighten the DU bushing until it makes secure contact with the shaft.
4. Move the DU bushing together with the machine shaft into the hollow shaft of the gear unit.

Hydraulic pulling equipment can be used instead of the nut and screw spindle shown in the diagram.

5.4.2.2.3 Axial locking

Depending on the version, lock the hollow shaft axially on the machine shaft (e.g. by a locking ring, end plate, adjusting screw).

5.4.2.3 Dismantling

Measures prior to dismantling

NOTICE

Damage to the gear unit

The gear unit can become damaged if it skews during dismantling.

Do not allow the gear unit to skew when you remove it from the machine shaft. When removing the gear unit using hydraulic pulling equipment, excessive force can be placed on the housing, bearings and other gear unit components. Always check the hollow shaft bearings for damage before reattaching the gear unit to the machine shaft.

Information

Reducing the risk of corrosion

When using jacking screws or screw spindles, round off and grease the end of the thread (head) that presses against the driven machine to avoid the risk of corrosion.

Procedure

To remove the shaft-mounted gear unit with hollow shaft from the machine shaft, proceed as follows:

1. Secure the gear unit in position.
2. Remove the axial locking element from the hollow shaft.
3. If fretting corrosion has formed on the seat surfaces, rust remover must be applied so that the gear unit can be more easily detached. The rust remover can be pumped in through the pressure oil connector.
4. To do this, first remove the end plate and locking ring.
5. Wait for the rust remover to work and then use suitable gear to lift the gear unit and dismantle it using a fixture.
6. Depending on the conditions on site, you can use one of the following methods to remove the gear unit from the machine shaft:
   - With jacking screws in an end plate
   - With a central screw spindle
   - Using hydraulic pulling equipment

The following diagram shows the dismantling procedure using an end plate for gear units with a hollow shaft and spline:

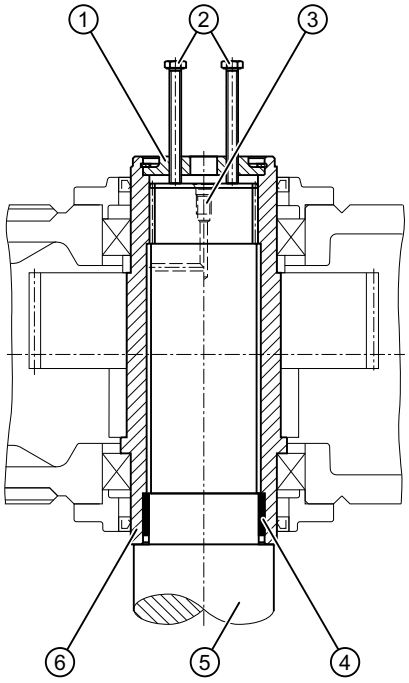

Figure 5-18: Dismantling using an end plate

① End plate
② Jacking screws
③ Pressure oil connector
④ DU bushing
⑤ Machine shaft
⑥ Hollow shaft

The following diagram shows the dismantling procedure using hydraulic pulling equipment for gear units with hollow shaft and spline:

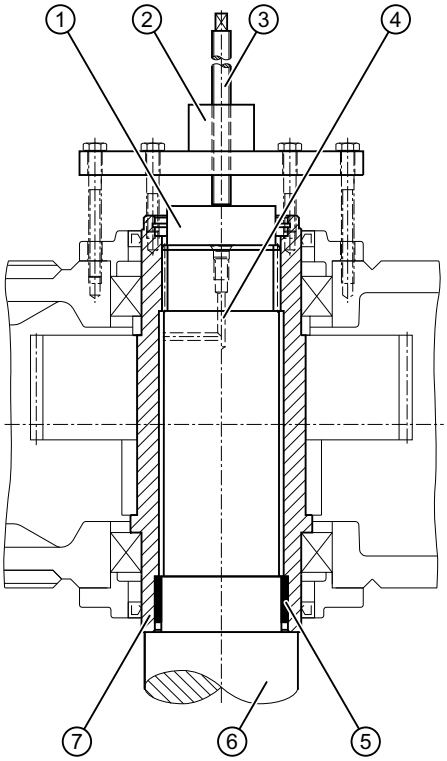

Figure 5-19: Dismantling using hydraulic pulling equipment

① Auxiliary plate for pressing out
② Hydraulic pulling equipment
③ Screw spindle
④ Pressure oil connector
⑤ DU bushing
⑥ Machine shaft
⑦ Hollow shaft

Maximum forcing pressures

NOTICE

Damage to the gear unit housing or other gear unit components

The gear unit housing or other gear unit components might sustain damage if forcing pressures in excess of the maximum specified values are applied.

When removing a gear unit that is not only supported at the hollow shaft, but also at the housing, the forcing pressures specified in the tables below must not be exceeded. The hollow shaft bearings must always be checked for damage before the gear unit is attached to the machine shaft.

Refer to the following table for the maximum forcing pressures:

Gear unit size	Maximum forcing pressures in N	Gear unit size	Maximum forcing pressures in N
2	11 700	11	97 200
3	15 200	12	113 600

Gear unit size	Maximum forcing pressures in N	Gear unit size	Maximum forcing pressures in N
4	22 600	13	140 000
5	33 000	14	160 000
6	37 500	15	193 000
7	50 000	16	215 000
8	56 000	17	240 000
9	65 000	18	266 000
10	82 000	≥ 19	On request

Table 5-4: Maximum forcing pressures

Information

The auxiliary plate is not delivered as standard with the gear unit.

The auxiliary plate for removing the gear unit is not supplied as standard with the gear unit.

5.4.3 Shaft-mounted gear unit with hollow shaft and shrink disk

Introduction

The end of the driven machine shaft (material C60+N or higher strength) should have a hole centred in its end face as defined by DIN 332, form DS (with thread). The connection dimensions for the driven machine shaft can be found in the dimension drawing in the complete documentation.

5.4.3.1 Assembly

Measures to be taken prior to assembly

⚠ CAUTION

Risk of injury due to chemical substances

Observe the manufacturer's guidelines on how to handle lubricants and solvents.

Wear suitable protective clothing.

Improper use can damage the gear unit. Be sure to take the following precautions:

- Use a suitable cleaning agent to remove the corrosion protection from the hollow shaft and the machine shaft.
- Inspect the hollow shaft and machine shaft for damaged seats and edges.
- If necessary, rework the components with an appropriate tool and then clean them again.

NOTICE

Risk of damage to shaft sealing rings

Aggressive chemical cleaning agents may cause damage to shaft sealing rings.

Do not allow the cleaning agent to come into contact with the shaft-sealing rings.

Information

The bore of the hollow shaft and the machine shaft must be free of any grease

Make sure that the hollow shaft bore and the machine shaft are completely free of grease in the area around the shrink disk seat. The reliability with which torque is transmitted depends to a large extent on this.

Do not use any contaminated solvents or soiled cleaning cloths, nor any cleaning agents that contain oil (such as petroleum or turpentine) to degrease the surfaces.



⚠ DANGER

Danger of explosion

Danger to life through ignition of a potentially explosive atmosphere caused by sparks or hot surfaces.

If there is slip between the hollow shaft and stub shaft, or if the shrink disk slips on the hollow shaft, this can cause sparks and hot surfaces.

- Ensure that bore of the hollow shaft and the stub shaft in the area of the shrink disk seat are absolutely clean and free of any grease and oil.
- Ensure that the shrink disk is correctly mounted and tensioned before the system is switched on.

5.4.3.1.1 Pulling on with integrated DU bushing

Procedure

NOTICE

Damage to the gear unit

The gear unit can become damaged if it skews during assembly.

The hollow shaft must be flush with the machine shaft during assembly of the gear unit on the machine shaft. Do not allow the gear unit to skew.

NOTICE

Damage to the rolling-contact bearings

The rolling-contact bearings can become damaged if the gear unit skews during mounting.

The hollow shaft may be mounted on a machine shaft shoulder only if the gear unit features one of the following:

- Torque arm
- Elastic pedestal
- Supported by gear unit swing base

Proceed as follows to mount the gear unit with hollow shaft and shrink disk onto the driven machine shaft with integrated DU bushing:

1. Use suitable hoisting gear to lift the gear unit.
2. Mount the gear unit using the nut and threaded spindle.
   The gear unit is braced by the end plate in the hollow shaft.
3. Pull on the gear unit with the hollow shaft up to the seat below the shrink disk on the machine shaft.
   The machine shaft centres itself in the seat below the shrink disk and in the DU bushing.
4. Mount the hollow shaft against the machine shaft collar.

The following diagram shows the preparation for gear units with hollow shaft and shrink disk:

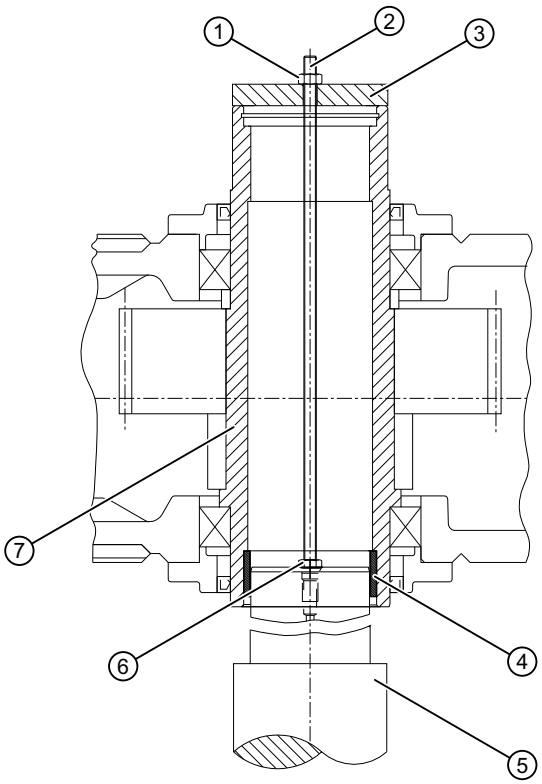

Figure 5-20: Preparation for gear units with hollow shaft and shrink disk

① Nut
② Screw spindle
③ End plate
④ DU bushing
⑤ Machine shaft
⑥ Nut
⑦ Hollow shaft

Parts 1 and 2 are not included in the scope of delivery.

5.4.3.1.2 Mounting with DU bushing as a separate component

Procedure

NOTICE

Damage to the gear unit

The gear unit can become damaged if it skews during assembly.

The hollow shaft must be flush with the machine shaft during assembly of the gear unit on the machine shaft. Do not allow the gear unit to skew.

NOTICE

Damage to the rolling-contact bearings

The rolling-contact bearings can become damaged if the gear unit skews during mounting.

The hollow shaft may be mounted on a machine shaft shoulder only if the gear unit features one of the following:

- Torque arm
- Elastic pedestal
- Supported by gear unit swing base

Proceed as follows to mount the gear unit with hollow shaft and shrink disk onto the driven machine shaft with a DU bushing as a separate component:

1. Use suitable hoisting gear to lift the gear unit.
2. Push the separately supplied DU bushing onto the machine shaft.
3. Use a ratchet tie to tighten the DU bushing until it makes secure contact with the shaft.
4. Move the DU bushing together with the machine shaft into the hollow shaft of the gear unit.

Hydraulic pulling equipment can be used instead of the nut and screw spindle shown in the diagram.

5.4.3.1.3 Axial locking

Tightening the shrink disk as per specification ensures that the gear unit is properly axially locked. It is not necessary to install any further axial locking elements.

5.4.3.2 Dismantling

Procedure

To remove the shaft-mounted gear unit with hollow shaft and shrink disk from the machine shaft, proceed as follows:

1. Secure the gear unit in position.

2. Dismantle the shrink disk.
3. Lift the gear unit off the machine shaft using jacking screws until the seats under the shrink disk and the DU bushing are exposed.
4. Use suitable hoisting gear to lift the gear unit off the machine shaft.

5.5 Gear unit with type F flange shaft

5.5.1 Requirements

Ensure that the following measures are applied before mounting a gear unit with type F flange shaft:

- The area around the face of the flange shaft and mating flange must be absolutely free of any grease. The reliability with which torque is transmitted depends to a large extent on this.
- Do not use any contaminated solvents or soiled cleaning cloths, nor any cleaning agents that contain oil (such as petroleum or turpentine) to degrease the surfaces.

⚠ CAUTION

Risk of injury due to chemical substances

Chemical substances pose an injury risk.

Observe the manufacturer's guidelines on how to handle lubricants and solvents. Wear suitable protective clothing.

5.5.2 Installing the gear unit

Procedure

To mount a gear unit with type F flange shaft, proceed as follows:

1. Clean the contact surfaces of the flange shaft and the mating flange.
2. Using suitable lifting gear, set the gear unit down on the mating flange.
3. Before tightening the fastening bolts, make sure that the locating spigots of the flanges are interlocked.
4. Tighten the connecting bolts diagonally and evenly to the specified torque.

NOTICE

Damage to the gear unit by uneven tightening of the connecting bolts

The gear unit can be damaged by unevenly tightening the connecting bolts.

Tighten the connecting bolts diagonally and evenly to the specified torque. When tightening the connecting bolts, make sure that the gear unit is free of mechanical stress.

The following table lists the tightening torques at the flange connections.

Gear unit size	Strength class		Tightening torque
	Bolt DIN 931	Nut DIN 934	
5 ... 6	10.9	10	610 Nm
7 ... 10	10.9	10	1 050 Nm
11 ... 16	10.9	10	2 100 Nm
17 ... 20	10.9	10	3 560 Nm
21 ... 22	10.9	10	5 720 Nm

Table 5-5: Tightening torques at the flange connections

5.6 Couplings

Introduction

Couplings must be balanced as specified in the relevant operating instructions. Balance the couplings if required.

The coupling parts might become misaligned as a result of:

- Failure to accurately align the parts during assembly
- During operation of the system, e.g.:
  - Due to thermal expansion
  - Due to shaft deflection
  - Due to machine frames or substructures that are too soft

NOTICE

Premature wear and material damage to gear units due to misalignment

Gear units might suffer premature wear and material damage if they are misaligned.

Make sure that the maximum permissible displacement values are never exceeded during operation. These values can be found in the operating instructions for the coupling.

Angular and radial displacement might occur simultaneously. Make sure that the total value of both displacements does not exceed the maximum permissible angular or radial displacement value.

If you are using couplings supplied by other manufacturers, contact them and ask them for the maximum permissible misalignment tolerances, making sure that you specify the potential radial loads for your application.

The following diagram shows the possible displacements:

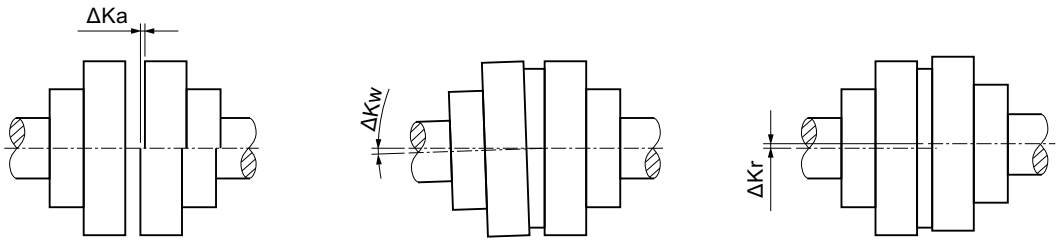

Figure 5-21: Possible displacements

Alignment

Alignment must be carried out in two axis planes that are vertical with respect to one another. This is possible using rulers (radial offset) and feeler gauges (angular offset) as shown in the diagram. You will achieve a greater degree of alignment accuracy by using a dial gauge or laser alignment system.

The diagram below shows the alignment process based on the example of a flexible coupling:

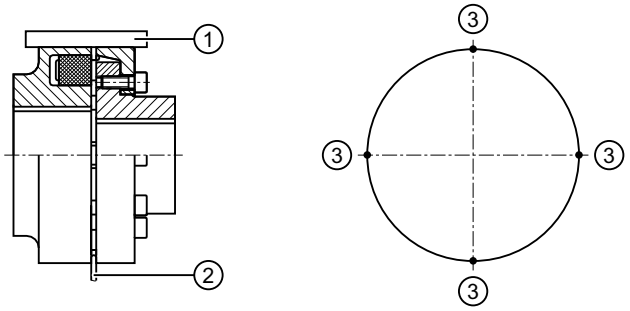

Figure 5-22: Alignment process based on the example of a flexible coupling

① Ruler
② Feeler gauge
③ Measuring points

Information

It is advisable to insert shims or metal sheets under the mounting feet in order to align the drive components in the vertical direction. It is helpful to use support paws with adjusting screws on the foundation to adjust the drive components laterally.

Hollow output shaft and output flange shaft

There is no need to install the output-side coupling for gear units with a hollow output shaft or flanged output shaft.

Further information

Further information about misalignment tolerances for couplings supplied by Flender can be found in the relevant operating instructions for the couplings in the complete documentation for the gear unit.

If couplings from other manufacturers are to be used, then, specifying the radial loads that occur, ask the manufacturer which alignment errors are permissible.

You can find additional information about couplings in the associated operating instructions.

5.7 Connecting components

5.7.1 Gear units with mounted components

Depending on the order specification, the gear unit can be equipped with various components.

Connect the closed-loop control and open-loop control electrical devices corresponding to the specifications of the device supplier.

Further information

You can find additional information on operation and maintenance in the associated operating instructions, provided in the complete gear unit documentation.

You can find the technical data of the mounted components in the contract-list of equipment provided in the complete gear unit documentation.

5.7.2 Making terminal box connections for pre-wired gear units

Procedure

Proceed as follows to wire up the gear unit:

1. Connect up all pre-wired gear units as shown on the circuit diagram in the terminal box.
2. If a pressure monitor is installed, bypass the pressure monitor signal for around 20 seconds during commissioning.
   This is necessary as the pressure in the gear unit must first stabilise.

Further information

You can find further information about pre-wired gear units in the order-specific list of equipment in the complete gear unit documentation.

5.7.3 Connecting the cooling coil

Procedure

To connect the cooling coil to the gear unit, proceed as follows:

1. Before connecting the cooling coil, remove the sealing plugs from the connection sleeves.

2. Flush through the cooling coil to remove any dirt or dust.
3. Connect up the cooling water inlet and drain lines. Refer to the dimension drawing for the position of the connections.

Further information

Further information about the cooling coil can be found in the complete documentation for the gear unit.

Information

Observe the information provided in chapter Cooling coils (Page 37).

5.7.4 Connecting the air-oil cooler

Procedure

To connect the air-oil cooler to the gear unit, proceed as follows:

1. Make sure that air can circulate freely before you connect up the air-oil cooler.
2. Blast the air-oil cooler with compressed air.
3. Electrically connect the contamination indicator of the double changeover filter and the pressure monitor.
4. Electrically connect the fan motor.

Further information

You can find additional information on the air-oil cooler in the air-oil cooler operating instructions, provided in the complete gear unit documentation.

Information

Observe the information provided in chapter of the Mounted oil supply system with air-oil cooler (Page 39).

5.7.5 Connecting the water-oil cooler

NOTICE

Damage to the water-oil cooler

When installing the piping, it is not permissible that the connections of the water-oil cooler are subject to force, torque or vibration.

Procedure

To connect the water-oil cooler to the gear unit, proceed as follows:

1. Remove the connecting bushes from the cooling water connection before connecting the water-oil cooler.
2. Flush the water-oil cooler to remove any dirt and pollution.
3. Connect up the cooling water inlet and drain lines.
   Refer to the dimension drawing for the direction of flow and the position of the connections.
4. Electrically connect the pressure monitor (only for appropriately equipped gear units).

Further information

You can find additional information on the water-oil cooler in the water-oil cooler unit operating instructions, provided in the complete gear unit documentation.

Information

Observe the information provided in chapter of the Mounted oil supply system with water-oil cooler (Page 41).

5.7.6 Connecting the heating element

Procedure

To connect heating elements to the gear unit, proceed as follows:

1. Check that the heating element connection is not damaged.
2. Connect up the oil temperature monitoring system in the oil sump.
3. Install the electrical wiring for the oil level monitoring system.
4. Install the electrical wiring for the heating elements.

DANGER

Explosion and fire hazard

Exposed heating elements pose an explosion or fire hazard as they can ignite an explosive atmosphere.

Do not switch on the heating elements unless you have checked that they are completely immersed in the oil bath.

If heating elements are retrofitted, the maximum heat output (Page 44)at the outer surface of the heating element must not be exceeded.

Further information

Further information about the heating can be found in the heating operating instructions in the complete documentation for the gear unit.

Additional information about the oil level monitoring system can be found in the operating instructions for the oil level monitoring system components provided in the complete gear unit documentation.

You can find technical data in the separate data sheet and in the list of equipment in the complete gear unit documentation.

5.7.7 Connecting the pressure monitor

For gear units with a pressure monitor, you must connect the pressure monitor so that it functions correctly.

Bypass the pressure monitor signal for around 20 seconds during commissioning.

Further information

You can find additional information on pressure monitoring in the pressure monitor operating instructions, provided in the complete gear unit documentation.

5.7.8 Installing a separate oil supply system

Procedure

To connect the oil supply system to the gear unit, proceed as follows:

1. Remove the dummy flange from the suction and delivery line before connecting the system.
2. Screw the oil supply system to the gear unit using connecting pipes if necessary.
3. Connect the system to the gear unit in accordance with the dimension drawings in the complete documentation and install it as a separate system.
4. When installing the system, make sure that the pipework is not subjected to mechanical stresses.

Further information

Further information about the oil supply system can be found in the oil supply system operating instructions in the complete documentation for the gear unit.

5.7.9 Connecting the oil level monitoring system

Procedure

To connect the oil level monitoring system to the gear unit, proceed as follows:

1. Ensure that the filling level limit switch connection is not damaged.
2. Electrically connect the filling level limit switch.
3. Connect the signal so that the drive motor cannot start when the "oil level too low" signal is active and so that an alarm is output.
   Bypass this signal in operation.

Further information

Additional information about the oil level monitoring system can be found in the operating instructions for the oil level monitoring system components provided in the complete gear unit documentation.

You can find technical data in the separate data sheet and in the list of equipment in the complete gear unit documentation.

5.7.10 Connecting the Pt 100 resistance thermometer

Procedure

To connect the Pt 100 resistance thermometer, proceed as follows:

1. Check that the Pt 100 resistance thermometer connection is not damaged.
2. Install the electrical wiring between the Pt 100 resistance thermometer and the evaluation unit. The customer is responsible for providing the evaluation unit.

Further information

Further information about the Pt 100 resistance thermometer can be found in the Pt 100 resistance thermometer operating instructions in the complete documentation for the gear unit.

5.7.11 Connecting the temperature monitor

Procedure

To connect the temperature monitor to the gear unit, proceed as follows:

1. Make sure that the temperature monitor connection is undamaged.
2. Install the electrical wiring for the temperature monitor.

Further information

Further information about the temperature monitor can be found in the temperature monitor operating instructions in the complete documentation for the gear unit.

5.7.12 Connecting the bearing monitoring system

Procedure

To connect the bearing monitoring system to the gear unit, proceed as follows:

1. Make sure that the connections provided for holding the bearing monitoring equipment are undamaged.
2. Install the bearing monitoring equipment at the customer's site.

Further information

Further information about the bearing monitoring system can be found in the operating instructions for the bearing monitoring system components provided in the complete gear unit documentation.

5.7.13 Connecting the motor pump

Procedure

To connect the motor pump, proceed as follows:

1. Make sure that the connections of the motor pump are not damaged.
2. Connect up the motor pump according to the terminal diagram and the relevant operating instructions.

Further information

You can find additional information about the motor pump in the terminal diagrams and the lists of equipment provided in the complete gear unit documentation.

5.7.14 Electrical connections

Procedure



⚠ DANGER

Electric shock

Live parts can cause electric shock.

Ensure that the entire plant is de-energised before starting electrical installation work. Carefully observe the five safety rules (Page 17).

To connect the motors and monitoring devices, proceed as follows:

1. Ensure that the connections of the motors and monitoring devices are not damaged.
2. Connect up the motors and monitoring devices according to the terminal diagram and the relevant operating instructions.
3. Insulate all cable entry points (glands) at electrical equipment as required for the environment in which the equipment will operate.

Further information

You can find additional information about the electrical connections in the terminal diagrams and equipment lists provided in the complete gear unit documentation.

5.8 Tightening procedure

5.8.1 Introduction

Bolts

The bolts must have the following properties:

- Made of steel
- Black-annealed or phosphatised
- Lightly oiled (do not add additional oil)

Information

Replacing bolts

Replace any bolts that are no longer fit for use by bolts of the same type and strength class.

Mating threads

The mating threads must have the following properties:

- Made of steel or cast iron
- Dry, cut threads

Information

Using a lubricant

As a rule, lubricants may not be used, because this can result in the bolt connection becoming overloaded.

5.8.2 Bolt connection classes

In order to affix fastening bolts, note the information in the following table:

Mounting	Bolt connection class	Scatter of the torque emitted on the tool	Tightening procedure
Gear unit Motor Brake Torque arm	C	± 5 % to ± 10 %	• Hydraulic tightening with mechanical screwdriver • Torque-controlled tightening with a torque wrench or a signal-emitting torque wrench • Tightening with a precision mechanical screwdriver with dynamic torque measurement
	D	± 10 % to ± 20 %	• Torque-controlled tightening with mechanical screwdriver

Mounting	Bolt connection class	Scatter of the torque emitted on the tool	Tightening procedure
Protection cover Sun shield	E	± 20 % to ± 50 %	• Tightening with pulse screwdriver or impact wrench, without adjustment checking device • Tightening by hand, using a wrench without torque measuring device

Table 5-6: Information on tightening fastening bolts

Further information

You can find additional information about tightening torques when mounting motor and brake in the operating instructions from the particular manufacturer.

5.8.3 Tightening torques and preload forces

The specified bolted connections must be tightened to the torques stated in the table below:

The tightening torques apply to friction values of μ_{total} = 0.14.

The following table lists the preload forces and tightening torques for bolt connections, strength classes 8.8; 10.9; 12.9:

Nominal thread diameter	Bolt strength class	Preload force for bolt connection classes from the table in chapter Bolt connection classes (Page 104)			Tightening torque for bolt connection classes from the table in chapter Bolt connection classes (Page 104)		
d mm		C	D	E	C	D	E
		$F_{M\ min.}$ N			M_A Nm		
M10	8.8	18 000	11 500	7 200	44.6	38.4	34.3
	10.9	26 400	16 900	10 600	65.4	56.4	50.4
	12.9	30 900	19 800	12 400	76.5	66.0	58.9
M12	8.8	26 300	16 800	10 500	76.7	66.1	59.0
	10.9	38 600	24 700	15 400	113	97.1	86.6
	12.9	45 100	28 900	18 100	132	114	101
M16	8.8	49 300	31 600	19 800	186	160	143
	10.9	72 500	46 400	29 000	273	235	210
	12.9	85 000	54 400	34 000	320	276	246
M20	8.8	77 000	49 200	30 800	364	313	280
	10.9	110 000	70 400	44 000	520	450	400
	12.9	129 000	82 400	51 500	609	525	468

Nominal thread diameter	Bolt strength class	Preload force for bolt connection classes from the table in chapter Bolt connection classes (Page 104)			Tightening torque for bolt connection classes from the table in chapter Bolt connection classes (Page 104)		
d		C	D	E	C	D	E
mm		$F_{M\ min.}$ N			M_A Nm		
M24	8.8	109 000	69 600	43 500	614	530	470
	10.9	155 000	99 200	62 000	875	755	675
	12.9	181 000	116 000	72 500	1 020	880	790
M30	8.8	170 000	109 000	68 000	1 210	1 040	930
	10.9	243 000	155 000	97 000	1 720	1 480	1 330
	12.9	284 000	182 000	114 000	2 010	1 740	1 550
M36	8.8	246 000	157 000	98 300	2 080	1 790	1 600
	10.9	350 000	224 000	140 000	2 960	2 550	2 280
	12.9	409 000	262 000	164 000	3 460	2 980	2 670
M42	8.8	331 000	212 000	132 000	3 260	2 810	2 510
	10.9	471 000	301 000	188 000	4 640	4 000	3 750
	12.9	551 000	352 000	220 000	5 430	4 680	4 180
M48	8.8	421 000	269 000	168 000	4 750	4 090	3 650
	10.9	599 000	383 000	240 000	6 760	5 820	5 200
	12.9	700 000	448 000	280 000	7 900	6 810	6 080
M56	8.8	568 000	363 000	227 000	7 430	6 400	5 710
	10.9	806 000	516 000	323 000	10 500	9 090	8 120
	12.9	944 000	604 000	378 000	12 300	10 600	9 500
M64	8.8	744 000	476 000	298 000	11 000	9 480	8 460
	10.9	1 060 000	676 000	423 000	15 600	13 500	12 000
	12.9	1 240 000	792 000	495 000	18 300	15 800	14 100
M72x6	8.8	944 000	604 000	378 000	15 500	13 400	11 900
	10.9	1 340 000	856 000	535 000	22 000	18 900	16 900
	12.9	1 570 000	1 000 000	628 000	25 800	22 200	19 800
M80x6	8.8	1 190 000	760 000	475 000	21 500	18 500	16 500
	10.9	1 690 000	1 100 000	675 000	30 500	26 400	23 400
	12.9	1 980 000	1 360 000	790 000	35 700	31 400	27 400
M90x6	8.8	1 510 000	968 000	605 000	30 600	26 300	23 500
	10.9	2 150 000	1 380 000	860 000	43 500	37 500	33 400
	12.9	2 520 000	1 600 000	1 010 000	51 000	43 800	39 200

Nominal thread diameter	Bolt strength class	Preload force for bolt connection classes from the table in chapter Bolt connection classes (Page 104)			Tightening torque for bolt connection classes from the table in chapter Bolt connection classes (Page 104)		
d		C	D	E	C	D	E
mm		$F_{M\,min.}$ N			M_A Nm		
M100x6	8.8	1 880 000	1 200 000	750 000	42 100	36 200	32 300
	10.9	2 670 000	1 710 000	1 070 000	60 000	51 600	46 100
	12.9	3 130 000	2 000 000	1 250 000	70 000	60 400	53 900

Table 5-7: Preload forces and tightening torques

5.9 Final work

Measures



DANGER

An explosive atmosphere can be ignited

An explosive atmosphere can be ignited if the gear unit overheats when the oil level is too low.

Lock the oil drain valves against accidental opening. If an oil sight glass or an oil level indicator is used to check the oil level, protect them against damage.



DANGER

An explosive atmosphere can be ignited

An explosive atmosphere can be ignited by electrostatic discharge.

Perform potential equalisation in accordance with the applicable regulations and guidelines. Threaded holes are provided on the gear unit to establish an earth connection. This work must always be done by specialist electricians.

Once all the elements have been assembled or connected, perform the following final work:

- Check whether all devices dismantled for transportation have been reassembled.
- Check all bolt connections for tightness after installation of the gear unit has been completed.
- Check the alignment after tightening the fastening elements. The alignment must not have changed in any way.
- Protect the gear unit against falling objects.
- Check that the guards over rotating parts are securely fastened.
  Contact (accidental or deliberate) with rotating parts is not permitted.
- Protect the cable entries against penetrating moisture.

Further information

You will find further information about the gear unit and all mounted or separately supplied components in the operating instructions of the relevant components included in the complete documentation for the gear unit.

You can find additional technical specifications in the separate data sheet in the complete gear unit documentation.

Commissioning 6

6.1 Measures prior to commissioning

Take the following measures before commissioning the gear unit:

- Read and observe the operating instructions.
- Replace the screw plug with the air filter or the wet-air filter. Note the instructions 7300 for this.
- Gear units with backstop: Observe the appropriate measures prior to commissioning gear units equipped with backstop (Page 109).
- Gear unit with auxiliary drive: Take the appropriate measures before commissioning gear units with an auxiliary drive (Page 110).
- Fill the gear unit with oil.
- Gear unit with oil supply system: Check that the oil supply system is working properly.
- Check the oil level.
- Check the gear unit for leaks.
- Check whether the monitoring devices are connected and switched on.
- Gear unit with oil supply system: Take the appropriate measures before commissioning gear units with an oil supply system (Page 112).
- Ensure that all pipes and components are filled with oil.



⚠ DANGER

Potentially explosive atmosphere can be ignited

A potentially explosive atmosphere can be ignited if the gear unit overheats when the oil level is too low.

Check the oil level and top up with oil if necessary.

Check the gear unit for the explosion protection marking.

More information

You can find additional information on oil and changing the air filter in the instructions 7300, which are part of the complete documentation of the gear unit.

More information about individual components can be found in the operating instructions for the components in the complete documentation for the gear unit.

6.1.1 Gear unit with backstop

Take the following measures before commissioning the gear unit with backstop:

- Fill the amount of oil (specified on the plate attached to the gear unit) through the oil filling screw of the backstop.
  Use the same oil type and oil viscosity as for the gear unit itself.

- Check that the backstop can be easily rotated in the free-wheeling direction without having to exert excessive force. When doing his, observe the direction of rotation arrows at the gear unit.
- Before connecting the motor, identify the phase sequence of the three-phase power system using a phase sequence indicator.
  Connect the motor corresponding to the defined direction of rotation.

NOTICE

The backstop and the gear unit can be damaged

If you operate the gear unit adversely to the blocking direction of the backstop, then backstop and the gear unit can be damaged.

Do not operate the gear unit adversely to the blocking direction of the backstop. Observe the information on the plate attached to the gear unit.

6.1.2 Gear unit with auxiliary drive

Take the following measures before commissioning a gear unit with auxiliary drive:

- Please observe the information provided in the operating instructions for the auxiliary drive.
- Fill the overrunning clutch with oil via the intermediate flange. Use the same oil type and viscosity as for the gear unit itself.
- If required, release the brake on the auxiliary motor.
- Check that the overrunning clutch can be easily rotated in the free-wheeling direction without having to exert excessive force.
  To do this, rotate the motor shaft of the auxiliary drive in the opposite direction to the direction of rotation arrow to the gear unit.
- Before connecting the motor, identify the phase sequence of the three-phase power supply using a phase sequence indicator. Connect the motor corresponding to the defined direction of rotation.
- Electrically interlock the main motor and the auxiliary motor so that only one of the two motors can be switched on.
- For a maintenance drive: Check the shutdown function of the speed monitoring (Page 126).

NOTICE

The backstop and the gear unit can be damaged

If you operate the gear unit adversely to the blocking direction of the backstop, then backstop and the gear unit can be damaged.

Do not operate the gear unit adversely to the blocking direction of the backstop. Observe the information on the plate attached to the gear unit.

Further information

You can find additional information about the auxiliary drive in the auxiliary drive operating instructions in the complete documentation for the gear unit.

6.1.3 Oil level monitoring system

The gear unit can be equipped with an oil level monitoring system that uses a filling-level limit switch.

The oil level monitoring system has been designed to check the oil level when the gear unit is at a standstill before it starts.

Information

Connect the signal so that the drive motor cannot start when the "oil level too low" signal is active and so that an alarm is output. Bypass this signal in operation.

6.1.4 Gear units with cooling coil

Implement the following measures before commissioning the gear unit with cooling coil:

- Check that connecting pipes are firmly seated and tight.
- Open wide the shutoff valves in the coolant inflow and outflow lines of the coolant system.
- Make sure that the pressure in the cooling coil does not exceed the maximum permissible pressure.
- Make sure that the temperature of the cooling water is not higher than the maximum permissible value.

Further information

Further information about the cooling coil can be found in the data sheet and the list of equipment in the complete documentation for the gear unit.

Further information about connection dimensions and cooling water parameters can be found in the gear unit dimension drawing in the complete documentation for the gear unit.

Further information about the required cooling water flow rate and the maximum permissible inlet temperature can be found in the data sheet and the list of equipment in the complete documentation for the gear unit.

6.1.5 Gear unit with heating

Please observe the following measures to commission the gear unit with heating:

- Ensure that the heating elements are not exposed.
- Check the switching points of the temperature monitor.



⚠ DANGER

Explosion and fire hazard

Exposed heating elements pose an explosion or fire hazard as they can ignite an explosive atmosphere.

Do not switch on the heating elements unless you have checked that they are completely immersed in the oil bath.

If heating elements are retrofitted, the maximum heat output (Page 44)at the outer surface of the heating element must not be exceeded.

Further information

Further information about heating elements can be found in the heating element operating instructions in the complete documentation for the gear unit.

6.1.6 Gear units with oil supply system

Implement the following measures before commissioning the gear unit with oil supply system:

- Ensure that the maximum permissible pressure in the oil supply system components is not exceeded.
- Ensure that the maximum permissible temperature of the oil supply system components is not exceeded.



⚠ DANGER

Danger of explosion

Ignition of a potentially explosive atmosphere caused by overheating due to complete loss of or inadequate cooling could pose a danger to life.

Open wide the shutoff valves in the coolant inflow and outflow lines of the coolant system. Check that the connecting pipes are firmly seated and tight.



⚠ DANGER

Danger of explosion

Ignition of a potentially explosive atmosphere by sparks could pose a danger to life.

When commissioning a gear unit with flange pump, bypass the pressure monitor signal for approximately 20 seconds. This is necessary to allow the pressure build-up in the gear unit to stabilise.

Further information

You will find information on the oil supply system in the data sheet, in the list of equipment and in the operating instructions for the oil supply system which are included in the complete documentation for the gear unit.

6.1.7 Filling lubricant into gear units with mounted backstop or auxiliary drive

Proceed as follows to fill lubricant into gear units with mounted backstop or auxiliary drive:

1. Check the rating plate or the additional plate to check the oil quantity and oil grade that need to be filled.
2. Remove the screw plugs from the overrunning clutch or backstop.
3. Pour in the lubricant through a filling filter with a filter mesh of maximum 25 µm.
4. Insert and tighten the screw plugs again.
5. Perform a function test on the overrunning clutch prior to commissioning.

6.2 Measures during commissioning

Take the following measures when commissioning the gear unit and document them:

- For gear units with oil supply system: Check that the oil supply system is working properly.
- Check the oil level.
- Measure the oil sump temperature (Page 121) after the gear unit has run in.
- Check the tightness of the shaft seal on the gear unit (Page 30).
- Check that all rotating parts are free to move.
- Check whether the shutoff valves are open.
  - Check that all of the oil drain valves are closed.
  - Ensure that all of the other shutoff valves are open.
- Check that the connecting pipes are firmly seated and tight.
- For gear units with bearing monitoring based on vibration measurement: Measure the vibration levels of the rolling-contact bearings (Page 126) to create initial and comparison values.
- For gear units with bearing monitoring using a Pt 100 resistance thermometer: Measure the temperature at the rolling-contact bearings (Page 126) to create initial and comparison values.
- Bypass the pressure monitor signal for around 20 seconds during commissioning. This is necessary as the pressure in the gear unit must first stabilise. If the oil pressure has still not built up after 20 seconds, you can extend this period slightly in consultation with the manufacturer.

More information

You can find additional information on the topic of oil in the instructions 7300, which are part of the complete documentation of the gear unit.

More information about the oil supply system can be found in the oil supply system operating instructions contained in the complete documentation for the gear unit.

Operation 7

7.1 Operating data

Introduction

To ensure correct, trouble-free operation of the system, observe the operating data of the gear unit and, depending on the order specification, the data in the operating instructions for the oil supply system.

The valid operating data can be found in the annex Technical data (Page 143).

The following operating data apply to the oil:

Maximum operating temperature	90 °C	is applicable for mineral oil, API groups I or II and saturated synthetic ester
	90 °C	is applicable for semi-synthetic oils, API group III, PAO and PG oils
Water pressure of the cooling coil or the water-oil cooler	< 8.0 bar	

Table 7-1: Operating data for temperature class T4 and/or maximum surface temperature 120 °C

Maximum operating temperature	90 °C	is applicable for mineral oil, API groups I or II and saturated synthetic ester
	100 °C	is applicable for semi-synthetic oils, API group III, PAO and PG oils
Maximum operating temperature (for brief periods)	100 °C	is applicable for mineral oil, API groups I or II and saturated synthetic ester
	110 °C	is applicable for semi-synthetic oils, API group III, PAO and PG oils
Water pressure of the cooling coil or the water-oil cooler	< 8.0 bar	

Table 7-2: Operating data for temperature classes T1, T2, T3 and/or maximum surface temperature 150 °C, 200 °C

You will find information about the oil pressure in the data sheet, in the list of equipment or in the dimension drawing in the complete documentation for the gear unit.



⚠ DANGER

An explosive atmosphere can be ignited

An explosive atmosphere can be ignited by electrostatic discharge.

Do not electrostatically charge the coating. Carefully ensure that highly efficient charge generating mechanisms, which can cause layers and coatings to be electrostatically charged, are reliably avoided.

Highly efficient charge generating mechanisms include the following:

- Fast flows of highly dust-laden air
- Sudden discharge of compressed gases that contain particles
- Other operations that involve high frictional forces (does not include manual cleaning or rubbing with cleaning cloths)

Further information

Further information about the technical data of the gear unit can be found in the data sheet and the list of equipment in the complete documentation for the gear unit.

7.2 Irregularities in operation

Introduction

Switch off the drive assembly immediately if it exhibits irregular behaviour during operation.

A few irregularities are listed below as examples:

- Oil temperature exceeds the maximum permissible value
- Alarm tripped by the pressure monitor in the oil cooling system or oil supply system
- Unusual operating noise

NOTICE

Faults can cause damage to the gear unit

The gear unit might sustain damage if it is not shut down when a fault occurs.

Switch off the drive assembly immediately if any fault condition develops.

Rectifying irregularities in operation

Proceed as follows to rectify any irregularities in operation:

1. Switch off the drive assembly if it exhibits irregular behaviour during operation.
2. Refer to the Fault information (Page 128) to find the cause of the fault.
3. If you still cannot determine the fault cause, contact FlenderCustomer Services.



⚠ DANGER

An explosive atmosphere can be ignited

An explosive atmosphere can be ignited if the gear unit overheats when the oil level is too low.

Note the following measures:

- Regularly check the gear unit for leaks.
- Secure oil drain valves against accidental opening.
- Protect any oil sight glasses against damage.
- Ensure that, after safety devices respond and before recommissioning, a restart lock-out must first be withdrawn.

7.3 Taking the unit out of service

If you take the unit out of service for a prolonged period, you must take the following measures depending on the length of time that the gear unit will remain out of service:

- Switch off the drive aggregate.
- For gear units with a cooling coil or a water-oil cooler:
  - If there is a risk of frost or the unit is to be taken out of service for a prolonged period, drain the water from the cooling coil or the water-oil cooler and remove residual water with compressed air.
  - Close the shutoff valves for the cooling water inlet and drain lines.
- Take measures to preserve the gear unit if it is to be out of service for a prolonged period. Follow the procedure described in instructions 7300.
- For gear units with a separate oil supply system or separate oil cooling system, perform the following steps before you preserve the gear unit:
  - Disconnect the gear unit from the separate oil supply system or separate oil cooling system.
  - Seal the openings in the gear unit, separate oil supply system and separate oil cooling system so that they are air-tight.

Servicing 8

8.1 General maintenance information

The operator must ensure compliance with the stipulated time limits. This also applies if the maintenance activities are included in the operator's internal maintenance schedules.

The gear unit could be damaged if the stipulated intervals for maintenance and servicing work are not observed.

The time limits stipulated in the maintenance schedule are largely dependent on the conditions of use of the gear unit. For this reason, it is only possible to state average time limits here. These refer to the following conditions of use:

- Daily operating time 24 h
- Duty cycle "ED" 100%
- Gear unit input speed 1500 rpm
- Average oil temperature in the oil sump (see Instructions 7300)



⚠ WARNING

Danger to life when the system is switched on

Working on a gear unit while it is in operation is hazardous and can result in potentially fatal injuries.

Always shut down the gear unit and any oil supply system (whether separate or mounted on the gear unit) before you carry out any work. Take measures to prevent the accidental restarting of the drive aggregate. Attach a notice stating clearly that work is being performed on the gear unit.

8.2 Maintenance schedule

Maintenance and servicing activities

The following table provides an overview of all maintenance and servicing activities which you are required to perform continuously or at regular intervals.

Intervals and time limits	Measures
As required	Replace the wet-air filter Clean the air filter Clean the fan and gear unit
Plate on the gear unit, gear unit dimension drawing	Replace the backstop
	Replace the overrunning clutch
According to manufacturer's specifications	Check the ignition protection system

Intervals and time limits	Measures
Daily	Check the oil temperature Check for leaks Check the oil pressure (if pressure lubrication is fitted) Check for changes in the gear unit noise Check the water pressure
Monthly and prior to every start-up	Check the oil level
400 operating hours after commissioning	Check the water content of the oil Change the oil (or depending on results of the oil sample test) Check that all of the fastening bolts are tight
Every 3 months	Check the speed monitoring of the auxiliary drive Check the auxiliary drive Clean the oil filter Clean the air filter Clean the coarse filter
Every 3 000 operating hours	Measure the vibration levels of the rolling-contact bearings
Every 3 000 operating hours, at least every 6 months	Regrease taconite seals
At least every 6 months (see specification on plate at lubrication point)	Replenish grease in grease-lubricated rolling-contact bearings
Every 5 000 operating hours, at least every 10 months	Replenish grease in the oil retaining pipe
Every 12 months	Check the friction linings of the torque-limiting back-stop Inspect the hose lines Inspect the shrink disk Check the water content of the oil
Every 10 000 operating hours, at least every 2 years	Change the oil if using mineral oil of API Group I or II or saturated synthetic esters (or depending on the result of the oil sample test) Check the air-oil cooler (the same time as you change the oil) Check the water-oil cooler (the same time as you change the oil)
Every 2 years	Carry out a general inspection of the gear unit Check the cooling coil Check that all of the fastening bolts are tight Clean the fan and gear unit

Intervals and time limits	Measures
Every 20 000 operating hours, at least every 4 years	Change the oil if using semi-synthetic oil of API Group III, PAO or PG oil (or depending on the result of the oil sampling)
6 years after the specified date of manufacture	Change the hoses

Table 8-1: Maintenance and servicing activities

Further information

Further information about additional maintenance and servicing activities can be found in the separate data sheet in the overall documentation for the gear unit.

Further information about installed components can be found in the operating instructions for the components in the complete documentation for the gear unit.

8.3 Maintenance and servicing work

Introduction

You can find maintenance and servicing measures relating to gear unit lubrication and preservation, which are not provided in this chapter, in instructions 7300 in the complete documentation for the gear unit.

8.3.1 Checking the oil temperature

Damage to the gear unit due to excessively high oil sump temperatures.

The gear unit can sustain damage due to inadequate lubrication if you allow it to operate at oil sump temperatures above the maximum permissible temperature.

Do not operate the gear unit above the maximum permissible oil sump temperature.

Procedure

Proceed as follows to check the oil temperature:

1. Allow the gear unit to reach its normal operating temperature.
2. Operate the gear unit with the maximum driven machine power.
3. Measure the temperature of the oil in the oil sump.
4. Compare the measured value with the maximum permissible oil temperature (Page 115).
5. Immediately stop the gear unit if the maximum permissible oil temperature is exceeded. Contact Flender Customer Services.

8.3.2 Filling the backstop with oil

Oil type and filling filter

When filling the backstop with oil, observe the following points:

- Use the same oil type and oil viscosity as for the gear unit itself.
- Use a filling filter with the same filter mesh size as for the gear unit itself.

Procedure

Proceed as follows to fill the backstop with oil:

1. Clean the oil filling point of the backstop.
2. Open the oil filling screw of the backstop.
3. Fill the amount of oil that is specified on the backstop plate. Use the same oil type and oil viscosity as for the gear unit itself.
   Use a filling filter with the same filter mesh size as for the gear unit itself.
4. Screw in the oil filling screw.

8.3.3 Replacing the backstop

Introduction

If you operate the gear unit at speeds below the disengagement speed of the backstop, then you must arrange for the backstop to be regularly replaced by Customer Services.

The replacement intervals are provided in the dimension drawing and on a plate attached to the gear unit. This plate is attached to the gear unit housing close to the backstop.

Procedure

Proceed as follows to replace the backstop:

1. Contact Customer Services promptly so that the backstop can be replaced by the specified deadline.
2. Arrange for Customer Services to replace the backstop.
3. Fill the new backstop with oil.

8.3.4 Filling the overrunning clutch of the auxiliary drive with oil

Proceed as follows to fill the overrunning clutch with oil:

1. Clean the oil filling point of the overrunning clutch.
2. Open the oil filling screw of the overrunning clutch.
3. Fill the amount of oil that is specified on the plate on the overrunning clutch. Use the same oil type and oil viscosity as for the gear unit itself.
   Use a filling filter with the same filter mesh size as the filter used to fill the gear unit.
4. Screw in the oil filling screw.

8.3.5 Checking the auxiliary drive

Follow the operating instructions of the auxiliary drive used that are included in the complete documentation for the gear unit.

8.3.6 Cleaning the fan and gear unit

Introduction

The gear unit can sustain damage due to inadequate cooling if you operate it with a damaged or soiled fan. Depending on the conditions at the site of installation, it may therefore be necessary to clean the fan and gear unit more frequently than stipulated in the maintenance schedule.

Take appropriate measures to ensure that the shaft seals do not come into contact with cleaning agents.

Procedure

Proceed as follows to clean the fan and gear unit:

1. Remove the air guide cover.
2. Use a hard brush to remove any stubborn dirt from the impeller, air guide cover and protective grille. Never use a high-pressure cleaning device.
3. Remove any spots of corrosion.
4. Reinstall the air guide cover.
   Make sure that the air guide cover is correctly fastened. Ensure that the fan does not come into contact with the air guide cover.



⚠ DANGER

An explosive atmosphere can be ignited

An explosive atmosphere can be ignited if the fan and air guide cover come into contact with one another as the cover has been incorrectly attached and sparks are generated.

Make sure that the air guide cover is correctly fastened. It is not permissible that the fan and air guide cover come into contact with one another.



⚠ DANGER

An explosive atmosphere can be ignited

An explosive atmosphere can be ignited if the gear unit overheats as a result of inadequate cooling.

Avoid dust from depositing on the gear unit. Adapt the cleaning intervals to the operational situation.

8.3.7 Checking the cooling coil

Introduction

A soiled cooling coil can cause damage to the gear unit. It is therefore important to check the cooling coil regularly.

Procedure

To check the cooling coil, proceed as follows:

1. Shut off the cooling water supply.
2. Disconnect the cooling water inlet and drain lines from the cooling coil.
3. Inspect the inner surface of the cooling coil for deposits.
   - If you discover that there are heavy deposits inside the cooling coil, arrange for the cooling water or the deposits to be analysed. Analysis services of this kind are offered by specialist chemical cleaning companies. These companies also sell special cleaning agents for removing deposits.
   - Before you use a cleaning agent, check whether it is suitable for use on the cooling coil materials. Flender Customer Services must be contacted. Carefully read the instructions for use supplied by the manufacturer before using different kinds of cleaning agent.
   - Replace especially severely soiled cooling coils by new ones. Please consult Flender-Customer Services (Page 133) for further advice.
4. Reconnect the cooling water inlet and drain lines to the cooling coil.

NOTICE

Build-up of heat due to soiled cooling coils

Overheating can damage the gear unit.

When the cooling coil is severely soiled, it can no longer be guaranteed to cool the gear unit effectively. In such cases, you must chemically clean the inside of the cooling coil or have it replaced with a new one.



⚠ DANGER

An explosive atmosphere can be ignited

An explosive atmosphere can be ignited if the gear unit overheats as a result of inadequate cooling. Heat can no longer be adequately dissipated for very dirty cooling coils.

In this case, clean the cooling coil or have it replaced with a new one.

8.3.8 Inspecting the shrink disk

Introduction

The shrink disk inspection is limited to a visual assessment of its condition.

Aspects of the inspection

Observe the following points when inspecting the shrink disk:

- Loose bolts
- Damage due to use of force
- Inner ring resting flush against the outer ring

Further information

Further information about the shrink disk can be found in the shrink disk operating instructions in the complete documentation for the gear unit.

8.3.9 Cleaning the coarse filter

Procedure

To clean the coarse filter, proceed as follows:

1. Inspect the coarse filter.
2. Remove the drain plug.
3. Pull out the strainer and remove particles of dirt.
4. Replace any strainers or sealing rings that are defective.

Further information

You can find additional information about the coarse filter in the coarse filter operating instructions provided in the complete gear unit documentation.

You can find additional technical data in the separate data sheet and in the list of equipment provided in the complete gear unit documentation.

8.3.10 Cleaning the double change-over filter

Procedure

To clean the double change-over filter, proceed as follows:

1. Inspect the double change-over filter.
2. Follow the operating instructions for the double change-over filter.

Further information

You can find additional information about the double change-over filter in the double change-over filter operating instructions provided in the complete gear unit documentation.

You can find additional technical data in the separate data sheet and in the list of equipment provided in the complete gear unit documentation.

8.3.11 Checking the speed monitoring of the auxiliary drive

Procedure

Proceed as follows to check the speed monitoring of the auxiliary drive:

1. Switch on the auxiliary drive.
2. Check whether the speed monitor switches.

Result

If the speed monitor does not switch, repair it or if necessary replace it.

Further information

You can find additional information about the auxiliary drive in the auxiliary drive operating instructions in the complete documentation for the gear unit.

8.3.12 Measuring the vibration levels of the rolling-contact bearings

Procedure

Proceed as follows to measure the vibration levels of the rolling-contact bearings:

1. Measure the vibrations at the rolling-contact bearings.
2. Document the measurement results.
3. Compare the measured values with the comparison values that were documented when commissioning the gear unit.
4. Archive the report together with these instructions.
5. Have Customer Services replace defective rolling-contact bearings.

Further information

You can find additional information on measuring the vibration levels at rolling-contact bearings in the operating instructions of the measurement sensor provided in the complete gear unit documentation.

8.3.13 Measuring the temperature at the rolling-contact bearings

Procedure

Proceed as follows to measure the temperature at the rolling-contact bearings:

1. Measure the temperature at the rolling-contact bearings.
2. Document the measurement results.
3. Compare the measured values with the comparison values that were documented when commissioning the gear unit.

4. Archive the report together with these instructions.
5. Have Customer Services replace defective rolling-contact bearings.

Further information

Further information about measuring the temperature at the rolling-contact bearings can be found in the Pt 100 resistance thermometer operating instructions in the complete documentation for the gear unit.

8.3.14 Checking the ignition protection system

Procedure

Proceed as follows to check the ignition protection system:

1. Check the ignition protection system for temperature monitoring to ensure that it is functioning correctly.
2. Check the ignition protection system for temperature monitoring for measurement accuracy.

Further information

You can find additional information on checking the ignition protection system in the operating instructions for the ignition protection system, provided in the complete gear unit documentation.

8.3.15 Check that all of the fastening bolts are tight

Note the following points when checking that the fastening bolts are tight:

- Observe the data regarding connection classes (Page 104), preload forces and tightening torques (Page 105).
- Replace any bolts that are no longer fit for use by bolts of the same strength class and type.

8.3.16 General inspection of the gear unit

Arrange for Flender Customer Services to inspect the gear unit. Thanks to their experience, these engineers are best placed to assess which gear unit components need to be replaced.

8.3.17 Final work

After you have finished all the work listed in the maintenance schedule, replace any bolts that are no longer fit for use by bolts of the same strength class and type.

8.4 Possible faults

The faults listed below are only intended as a troubleshooting guide.

If any faults occur while the unit is still under warranty, do not allow anyone except Flender Customer Services to attempt a repair.

Even after the warranty period has expired, you should still arrange for faults to be rectified by Flender Customer Services.

Information

Loss of warranty

You will invalidate the warranty for the gear unit if you modify it in any way without seeking the approval of Flender beforehand, or if you do not use original spare parts.

Only use original spare parts from Flender. Always arrange for Flender Customer Services to repair any faults that develop while the unit is still under warranty.

Possible faults and their rectification

The following table provides you with an overview of possible faults and indicates how they can be rectified.

Possible faults	Causes	Possible remedies
Blocking function of backstop has failed	Damaged backstop	• Contact Customer Services • Check the backstop and replace if necessary
Pressure switch triggers alarm	Oil pressure has dropped below minimum value	• Check the oil level at room temperature • Top up with oil if necessary • Check the oil pump • If required, replace the oil pump • Check the oil filter and coarse filter • If required, replace the oil filter or clean the coarse filter
Grease escaping at the output shaft	Defective rotary shaft sealing rings	• Inspect the rotary shaft seals and replace if necessary
Noise	Damage to the gear teeth	• Contact Customer Services • Inspect the toothed components • If necessary, replace damaged components
	The bearing play is excessive.	• Contact Customer Services • Adjust bearing play
	Defective rolling-contact bearings	• Contact Customer Services • Replace defective rolling-contact bearings
	Overrunning noises caused by operation on frequency converter	• Contact Customer Services • Check the closed-loop motor control system

Possible faults	Causes	Possible remedies
Noise	Gear unit fastening has worked loose	• Tighten bolts and nuts to the specified tightening torque • Replace damaged bolts and nuts
Outer surface of gear unit soiled with oil	Inadequate sealing of the housing cover or joints	• Seal housing cover or joints
	Labyrinth seals soiled with oil, incorrect transport position	• Check oil filling • Clean the labyrinths
Main drive motor does not start	Motor direction of rotation incorrect	• Change polarity of motor
	Backstop cage with sprags incorrectly installed or defective	• Contact Customer Services • Install the backstop cage, rotated through 180° - or replace
	Overrunning clutch blocked	• Contact Customer Services • Install a new overrunning clutch
	Overrunning clutch cage with sprags incorrectly installed and/or defective	• Contact Customer Services • Install the overrunning clutch cage, rotated through 180° - or replace
Main drive motor can start while the auxiliary drive is operational	Defective electrical interlocking between the main and auxiliary motor	• Check the connections • If necessary, replace defective devices
	Defective speed monitoring	• Check the connections • If necessary, replace defective devices
Auxiliary drive motor does not start	Overload at the output	• Reduce the load at the output
	Defective auxiliary drive motor	• Repair or replace motor
	Motor brake not released	• Correct the electrical connection of the motor brake • If required, replace the motor brake
The auxiliary drive motor starts, the main gear unit output shaft does not turn	Motor direction of rotation incorrect	• Change polarity of motor
	Overrunning clutch cage with sprags incorrectly installed	• Contact Customer Services • Install the overrunning clutch cage, rotated through 180° - or replace
	Defective overrunning clutch	• Contact Customer Services • Install a new overrunning clutch
Leakage	Labyrinth seals soiled with oil, incorrect transport position	• Check oil filling • Clean the labyrinths
	Inadequate sealing of the housing cover or joints	• Check the seals and replace if necessary • Seal housing cover or joints
	Defective rotary shaft sealing rings	• Check the rotary shaft sealing rings • Replace, if necessary
Wet-air filter is severely discoloured	Wet-air filter is spent	• Replace the wet-air filter

Possible faults	Causes	Possible remedies
Wet-air filter is becoming discoloured from the top downwards	Water in the oil	• Take test tube sample to examine oil condition for water penetration • Have the oil examined by a chemical lab • Change the oil if necessary
Oil is foaming in the gear unit	Preservation agent not completely drained off	• Change the oil
	Oil supply system left in operation for too long at low temperatures	• Switch off the oil supply system • Degas the oil
	Gear unit too cold in operation	• Switch off the gear unit • Degas the oil • Start up without cooling water during cold restart
	Water in the oil	• Take test tube sample to examine oil condition for water penetration • Have the oil examined by a chemical lab • Change the oil if necessary
	Oil defoamer has run out	• Examine the oil • Change the oil if necessary
	Unsuitable mixture of oils	• Examine the oil • Change the oil if necessary
Oil escaping from the gear unit	Inadequate sealing of the housing cover or joints	• Check the seals and replace if necessary • Seal housing cover or joints • Check the compression seals and retighten screws if necessary
	Leaking pipes	• Check the pipes, and replace or seal if necessary
Oil supply system malfunction	-	• Follow the operating instructions for the oil supply system
Elevated temperature during operation	Oil level in the gear unit housing too high	• Check the oil level • Correct the oil level if necessary
	Oil is too old	• Find out when the last oil change was done • Change the oil if necessary
	Oil is severely contaminated	• Change the oil
	Oil supply system or cooling coil defective	• Check the oil supply system or cooling coil • Replace defective components if necessary • Follow the operating instructions for the oil supply system
	Gear unit with water-oil cooler: Coolant flow too low or too high	• Adjust the valves at the supply and return lines • Check the water-oil cooler for free flow

Possible faults	Causes	Possible remedies
Elevated temperature during operation	Gear unit with air-oil cooler: Inadequate air flow	• Clean the air-oil cooler
	Gear unit with air-oil cooler: Cooler block soiled	• Clean the cooler block
	Gear unit with oil cooling system: Inadequate oil flow through the oil cooler	• Check the oil filter and coarse filter • If required, replace the oil filter or clean the coarse filter
	Gear units with cooling coil: Deposits in the cooling coil	• Clean, or if necessary, replace the cooling coil
	Gear unit with fan: Air intake opening in air guide cover or gear unit housing is soiled	• Clean the air guide cover and gear unit housing
	Coolant temperature is too high	• Check the temperature; correct if necessary
	Defective oil pump	• Check the oil pump function • Repair or replace oil pump if required
Elevated temperature at bearing points	Oil level in the gear unit housing too low or too high	• Check the oil level at room temperature • Correct the oil level if necessary
	Oil is too old	• Find out when the last oil change was done • Change the oil if necessary
	Oil supply system defective	• Check the oil supply system • Replace defective components if necessary • Follow the operating instructions for the oil supply system
	Defective rolling-contact bearings	• Contact Customer Services • Inspect the rolling-contact bearings and replace if necessary
	Defective oil pump	• Check the oil pump function • Repair or replace oil pump if required
Elevated temperature at backstop	Damaged backstop	• Contact Customer Services • Check the backstop and replace if necessary
Increased vibration amplitude at the bearing points	Defective rolling-contact bearings	• Contact Customer Services • Inspect the rolling-contact bearings and replace if necessary
	Gear wheels defective	• Contact Customer Services • Inspect the gear wheels and replace if necessary
Contamination indicator of the double change-over filter triggers an alarm	Double change-over filter clogged	• Change over the double change-over filter corresponding to the separate operating instructions • Clean the filter element

Possible faults	Causes	Possible remedies
Water in the oil	Oil supply system or cooling coil defective	• Check the oil supply system or cooling coil • Replace defective components if necessary • Follow the operating instructions for the oil supply system
	Engine room fan is blowing cold air onto gear unit: Water condenses	• Install suitable thermal insulation to protect gear unit housing • Close the air outlet or change the direction of the air outlet using structural measures.
	Climatic conditions	• Contact Customer Services • Use wet-air filter if necessary
	Oil foams in the oil sump	• Take test tube sample to examine oil condition for water penetration • Have the oil examined by a chemical lab

Table 8-2: Possible faults and their rectification

Service & Support 9

9.1 Contact

When ordering replacement parts, requesting a customer service technician or if you have any technical queries, contact our factory or one of our Customer Service addresses:

Flender Industriegetriebe GmbH

Thierbacher Strasse 24

09322 Penig

Germany

Tel.: +49 (0)37381 / 61-0

Fax: +49 (0)37381 / 80286

More information

Further information about service and support can be found on the Internet:

Service & Support (https://www.flender.com/service)

Disposal 10

Disposal of the gear unit

When disposing of the gear unit after its useful life, please observe the following measures:

- Remove operating oil, preservative agents and coolant from the gear unit and dispose of it according to regulations.
- Dispose of the gear unit parts according to applicable national regulations or recycle them.

Environmental protection

Observe the following environmental protection measures for disposal:

- Dispose of or recycle packaging material according to applicable national regulations.
- When changing the oil, collect the used oil in suitable containers. Use oil-binding agents to clean up any oil spillages immediately.
- Store preservative agents separately from used oil.
- Dispose of used oil, preservative agents, oil binding agents and oil-soaked cloths according to the applicable environmental protection regulations.

Spare parts

11

By stocking the most important spare parts at the installation site you can ensure that the gear unit is ready for use at any time.

Information

Damage to the gear unit due to use of unsuitable spare parts

Only use original spare parts from Flender. Flender shall not accept any warranty claims for spare parts that are not supplied by Flender.

Other spare parts are not tested and approved by Flender. Non-approved spare parts may possibly change the design characteristics of the gear unit and thus impair its active or passive safety.

Flender will accept no liability or warranty whatsoever for damage occurring as a result of the use of non-approved spare parts. The same applies to any accessories which were not supplied by Flender.

The contact address of Flender Customer Services can be found under Service & Support (Page 133).

Information required when ordering spare parts

To order spare parts, refer to the spare-parts list. Only ever use Flender spare parts.

When ordering spare parts, please provide the following information:

- Order number with item
- Type and size
- Part number
- Quantity

Declaration of incorporation

A

Declaration of Incorporation

Business name and full address of manufacturer:

Flender Industriegetriebe GmbH
Thierbacher Straße 24
09322 Penig
Germany

Name and address of the person authorised to compile the relevant technical documentation:

Jens Klein
Flender Industriegetriebe GmbH
Thierbacher Straße 24
09322 Penig
Germany

Description and identification of the partly completed machine:

Gear unit
H.SV, H.VV, H.HV, H.KV, H.DV, H.FV B.SV, B.VV, B.HV, B.KV, B.DV, B.FV
Sizes 1 to 22
to drive machines

The following “Essential Health and Safety Requirements” from – Directive 2006/42/EC Official Journal L 157, 9 June 2006, pages 24-86, Annex I, are applied and are fulfilled:

1.1.1, 1.1.2, 1.1.3, 1.1.5; 1.2.4.4; 1.3.1, 1.3.2, 1.3.3, 1.3.4, 1.3.6, 1.3.7, 1.3.8, 1.3.8.1; 1.4.1, 1.4.2.1; 1.5.1, 1.5.2, 1.5.4, 1.5.5, 1.5.6, 1.5.7, 1.5.8, 1.5.9, 1.5.10, 1.5.11, 1.5.13, 1.5.15; 1.6.1, 1.6.2; 1.7.1, 1.7.1.1, 1.7.1.2, 1.7.2, 1.7.4, 1.7.4.1, 1.7.4.2, 1.7.4.3

The relevant technical documentation according to Annex VII Part B has been created.

The partly completed machine complies with the - Directive 2014/34/EU, Official Journal L 96, 29 March 2014, Pages 309–356.

The manufacturer undertakes to send national authorities electronic copies of the relevant technical documentation for the partly completed machine following a reasoned request.

The partly completed machine may only be put into operation if it has been determined, where applicable, that the machine in which the partly completed machine is to be incorporated meets the specifications of the Directive 2006/42/EC.

Representative for issuing this Declaration of Incorporation on behalf of the manufacturer:

Flender Industriegetriebe GmbH



Penig, 2022-07-04

Jens Klein, CEO, Flender Industriegetriebe GmbH

Translation of the Declaration of Incorporation

Declaration of conformity

B

EU Declaration of Conformity

Product:

Gear unit
H.SV, H.VV, H.HV, H.KV, H.DV, H.FV B.SV, B.VV, B.HV, B.KV, B.DV, B.FV
Sizes 1 to 22

Name and address of the manufacturer:

Flender Industriegetriebe GmbH
Thierbacher Straße 24
09322 Penig
Germany

This Declaration of Conformity is issued under the sole responsibility of the manufacturer.

This declaration refers to the product mentioned above.

The object of the declaration described above is in conformity with the relevant EU harmonisation legislation:
– Directive 2014/34/EU, Official Journal L 96, 29 March 2014, Pages 309-356

Harmonised standards or other technical specifications on which the Declaration of Conformity is based:

EN 1127-1	: 2019
EN ISO 80079-36	: 2016
EN ISO 80079-37	: 2016
EN IEC 60079-0	: 2018

Notified Body, DEKRA Testing and Certification GmbH (0158) has received the technical documentation.

Signed for and on behalf of:

Flender Industriegetriebe GmbH



Penig, 2022-07-04

Jens Klein, CEO, Flender Industriegetriebe GmbH

Technical data

C

C.1 General technical data

Rating plate

The rating plate of the gear unit contains the most important technical data.

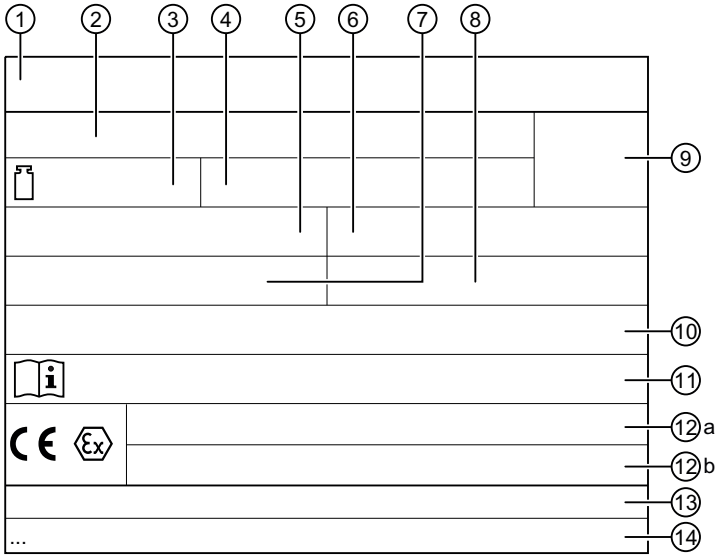

Figure C-1: Rating plate

①	Company logo	⑨	Optional DMC (Data Matrix Code)
②	Serial no.: Production plant code / order no.-item ser. no. / year of manufacture	⑩	Oil data: Oil type, oil viscosity, oil quantity
③	Total weight in kg	⑪	Number(s) of operating instructions, including issue date
④	For special information	⑫a	Marking for explosion protection – gas marking
⑤	Model, size	⑫b	Marking for explosion protection – dust marking
⑥	Power rating P_2 in kW or torque T_2 in Nm	⑬	Manufacturer documentation / Country of origin
⑦	Speed n_1	⑭	Hotline
⑧	Speed n_2		

The limits of the intended use of the gear unit are defined on the basis of these data and the contractual agreements concerning the gear unit concluded between Flender and the customer.

More information

Further information about these technical data can be found in the separate data sheet and the dimension drawings in the complete documentation for the gear unit.

You can find additional information about all major accessories including their technical data and control instructions in the order-specific list of equipment in the complete documentation for the gear unit.

Example code

The following is an example of the code printed in line 5 of the rating plate and explains the meaning of the individual letters and numbers.

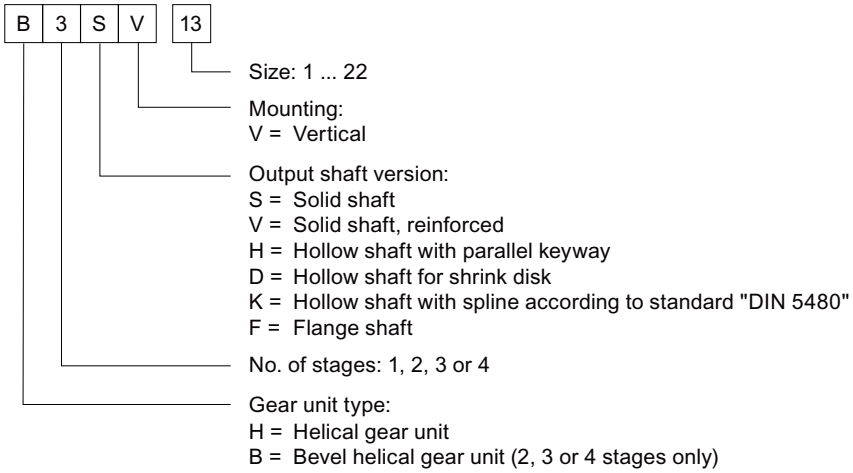

More information

You can find more information on the weights and the enveloping surface sound pressure levels in chapters Weights (Page 147) and Enveloping surface sound pressure level (Page 148).

Further information about these technical data can be found in the separate data sheet and the dimension drawings in the complete documentation for the gear unit.

Explosion protection marking

The explosion protection marking for above-ground applications is shown in the following table:

Equip-ment group	**Equip-ment cat-egory**	**Explosive atmo-sphere**	**Explo-sion group/ Dust group**	**Tem-perat-ure class**	**Maximum sur-face temperat-ure**	**Marking example**
II	2, 3	Gas (G)	IIA, IIB, IIC	T1, T2, T3, T4	-	CE Ex II 2G Ex h IIA T4 Gb -20 °C ≤ T_a ≤ 40 °C

Equip-ment group	Equip-ment cat-egory	Explosive atmo-sphere	Explo-sion group/ Dust group	Tem-perat-ure class	Maximum sur-face temperat-ure	Marking example
II	2, 3	Gas (G)	IIA, IIB, IIC	T1, T2, T3, T4		CE Ex II 2G Ex h IIA T4 Gb -20 °C ≤ T_a ≤ 40 °C
		or				
		Dust (D)	IIIA, IIIB, IIIC		120 °C, 150 °C, 200 °C	CE Ex II 2D Ex h IIIA T200 °C Db -20 °C ≤ T_a ≤ 40 °C
		Dust (D)	IIIA, IIIB, IIIC	-	120 °C, 150 °C, 200 °C	CE Ex II 2D Ex h IIIA T200 °C Db -20 °C ≤ T_a ≤ 40 °C

Table C-1: Explosion protection marking

Observe the following:

- **Only one** equipment category can be specified.
- **Only one** explosion group can be specified for the gas Ex atmosphere or one dust group for the dust Ex atmosphere.
- **Only one** temperature class can be specified.
- $T_{a\ min.} \leq T_a \leq T_{a\ max.}$ = permissible ambient temperature in °C:
  $T_{a\ min.}$ = minimum permissible ambient temperature
  $T_{a\ max.}$ = maximum permissible ambient temperature
  T_a = ambient temperature code
- The equipment category, explosion group, dust group, temperature class and maximum surface temperatures are specified as examples only.
- The gear unit is not designed for use in hybrid mixtures.

NOTICE

The gear unit can be damaged as a result of incorrect use

The gear unit may be damaged if used for a purpose other than the specified application.

For your particular application, observe the marking on the gear unit rating plate.

C.2 Ambient temperature

The specifications in the Explosion Protection Directive are applicable for an ambient temperature range from -20 °C up to 40 °C. By applying various suitable measures, the gear unit can be used in the ambient temperature range extending from -40 °C up to 60 °C. However, this must always be authorised by Flender.

In each individual case, the ambient temperature range stamped on the rating plate always applies.

Storing the gear unit

Do not expose the gear unit to harmful effects such as aggressive chemical products, environments with high levels of air pollution or humidity, or ambient temperatures below 0 °C or above 40 °C range.

C.3 Types

The gear unit is available in the following types.

H.SV, H.VV

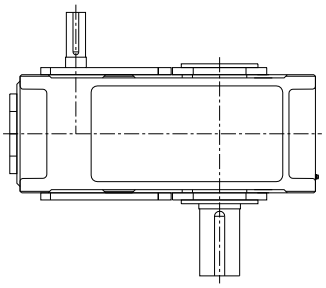

B.SV, B.VV

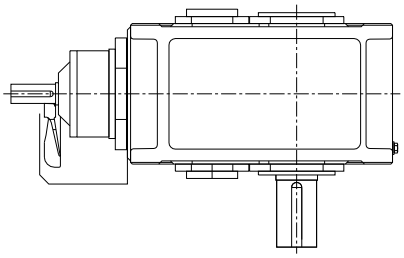

H.HV, H.KV

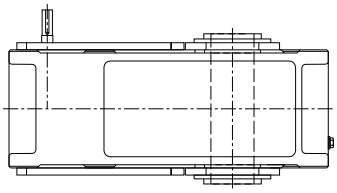

B.HV, B.KV

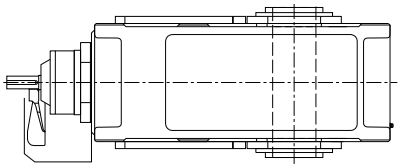

H.DV

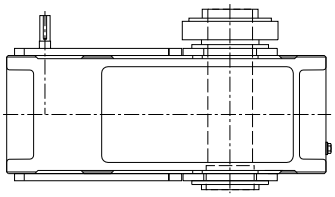

B.DV

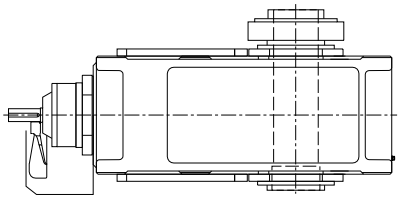

H.FV

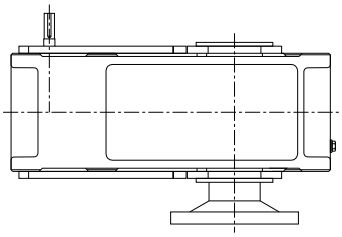

B.FV

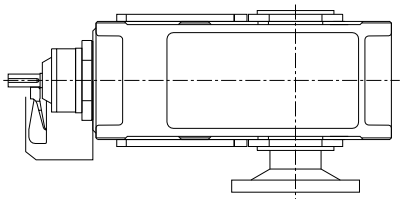

Further information

Further information and a detailed illustrated description of the gear unit can be found in the dimension drawing in the complete documentation for the gear unit.

C.4 Weights

The precise weights are specified in the dimension drawings in the complete documentation or on the rating plate.

All weight specifications refer to units without oil filling or mounted components.

Refer to the following tables for the weights (approximate values, in kg) of the gear units (Page 146):

Type	Gear unit size											
	1	2	3	4	5	6	7	8	9	10	11	12
H2.V	-	-	115	190	300	355	505	590	830	960	1 335	1 615
H3.V	-	-	-	-	320	365	540	625	875	1 020	1 400	1 675
H4.V	-	-	-	-	-	-	550	645	875	1 010	1 460	1 725
B2.V	65	90	140	235	360	410	615	700	1 000	1 155	1 640	1 910
B3.V	-	-	130	210	325	380	550	635	890	1 020	1 455	1 730
B4.V	-	-	-	-	335	385	555	655	890	1 025	1 485	1 750

Table C-2: Weights

Type	Gear unit size									
	13	14	15	16	17	18	19	20	21	22
H2.V	1 880	2 430	3 240	3 465	4 420	4 870	5 000	6 150	6 950	7 550
H3.V	2 155	2 490	3 260	3 625	4 250	4 740	4 750	6 250	6 550	7 050
H4.V	2 270	2 600	3 440	3 740	4 445	4 915	5 300	5 950	7 250	7 750
B2.V	2 350	2 725	3 795	4 160	5 320	5 860	-	-	-	-
B3.V	2 260	2 615	3 540	3 765	4 760	5 240	6 050	6 710	8 190	8 950
B4.V	2 280	2 605	3 435	3 765	4 460	4 930	5 400	6 000	7 350	7 850

Table C-3: Weights

C.5 Oil quantities

The oil quantity required is specified on the rating plate attached to the gear unit.

Refer to the following table for the oil quantities (approximate values, in litres) for a gear unit in vertical mounting position with splash lubrication (gear unit with oil expansion unit).

Type	Gear unit size									
	3	4	5	6	7	8	9	10	11	12
H2.V	14	25	23	27	58	62	100	110	160	180
H3.V	-	-	35	37	60	72	100	110	170	190
H4.V	-	-	-	-	50	60	95	110	165	180

Type	Gear unit size									
	3	**4**	**5**	**6**	**7**	**8**	**9**	**10**	**11**	**12**
B2.V	16	28	41	50	75	90	115	135	190	215
B3.V	15	28	32	35	52	67	115	125	180	200
B4.V	-	-	36	40	60	70	110	130	180	195

Table C-4: Oil quantities

The oil quantities for gear unit sizes ≤ 2 and ≥ 13 are available on request.

C.6 Enveloping surface sound pressure level

The gear unit has an enveloping surface sound pressure level at a distance of 1 m. Refer to the following tables for the enveloping surface sound pressure level.

The measurement is performed using the sound-intensity method according to ISO 9614 Part 2.

The workplace of the operators is defined as the area on the measuring surface at a distance of 1 m around the gear unit and in the vicinity where persons may be present.

The sound pressure level applies to a gear unit in the warm condition at an input speed n_1 and output power P_2 according to the rating plate, for measurements carried out on a Flender test bench. If more than one value is stated, the highest speed and power values apply.

The enveloping surface sound pressure level includes any mounted lubrication units. With outgoing and incoming pipes, the flange is considered to be the interface.

The sound pressure levels listed in the table were obtained based on statistical evaluations carried out by our Quality Control department. You can assume that the gear unit does not exceed these sound pressure levels with statistical certainty.

Refer to the following tables for the enveloping surface sound pressure level L_{pA} in dB(A) for bevel helical gear units with fan.

Type	i_N	n_1 in rpm	Gear unit size											
			1	**2**	**3**	**4**	**5**	**6**	**7**	**8**	**9**	**10**	**11**	**12**
B2	5 - 8	3000	79	83	85	89	-	-	-	-	-	-	-	-
		1500	65	70	73	76	79	81	83	84	85	87	88	89
		1000	<60	<60	67	71	73	74	77	78	79	80	82	83
		750	<60	<60	61	64	66	67	70	71	72	73	75	76
	9 - 14	3000	79	81	83	87	89	90	-	-	-	-	-	-
		1500	65	67	70	73	75	76	78	81	82	83	84	85
		1000	<60	61	63	67	68	70	73	74	75	77	79	80
		750	<60	<60	<60	61	62	64	66	67	68	70	72	73
	16 - 22.4	3000	77	79	81	85	88	89	90	91	92	-	-	-
		1500	63	65	67	71	74	76	78	79	80	81	83	84

Type	i_N	n_1 in rpm	Gear unit size											
			1	2	3	4	5	6	7	8	9	10	11	12
B2	16 - 22.4	1000	<60	<60	60	64	67	68	70	72	73	74	78	79
		750	<60	<60	<60	<60	61	63	65	67	68	69	71	72
B3	12.5 - 31.5	3000	-	-	82	86	87	88	90	92	93	-	-	-
		1500	-	-	69	72	75	77	79	80	81	82	83	85
		1000	-	-	62	65	68	69	71	72	73	74	77	78
		750	-	-	<60	<60	63	64	66	68	69	70	71	73
	35.5 - 56	3000	-	-	81	83	85	86	87	88	90	92	95	96
		1500	-	-	67	69	72	73	74	75	77	79	82	84
		1000	-	-	<60	63	65	66	67	69	71	72	73	75
		750	-	-	<60	<60	<60	<60	62	64	65	67	69	70
	63 - 90	3000	-	-	80	82	84	85	87	88	90	92	94	95
		1500	-	-	66	68	70	71	73	74	76	78	81	83
		1000	-	-	<60	61	63	64	66	68	69	71	73	75
		750	-	-	<60	<60	<60	<60	61	63	64	66	67	68

Table C-5: Enveloping surface sound pressure level

Type	i_N	n_1 in rpm	Gear unit size									
			13	14	15	16	17	18	19	20	21	22
B2	5 - 8	3000	-	-	-	-	-	-	-	-	-	-
		1500	91	92	94	-	-	-	-	-	-	-
		1000	84	85	87	89	90	-	-	-	-	-
		750	77	78	81	82	83	85	-	-	-	-
	9 - 14	3000	-	-	-	-	-	-	-	-	-	-
		1500	86	87	88	90	-	-	-	-	-	-
		1000	81	82	83	84	86	87	-	-	-	-
		750	74	75	77	78	79	80	-	-	-	-
	16 - 22.4	3000	-	-	-	-	-	-	-	-	-	-
		1500	87	88	89	90	-	-	-	-	-	-
		1000	80	81	82	83	84	84	-	-	-	-
		750	73	73	74	74	75	76	-	-	-	-
B3	12.5 - 31.5	3000	-	-	-	-	-	-	-	-	-	-
		1500	88	89	90	91	93	93	93	93	95	95
		1000	80	82	83	83	84	85	86	86	88	88
		750	74	75	76	77	78	78	79	79	81	81

Type	i_N	n_1 in rpm	Gear unit size									
			13	14	15	16	17	18	19	20	21	22
B3	35.5 - 56	3000	-	-	-	-	-	-	-	-	-	-
		1500	86	87	88	89	90	91	92	92	93	93
		1000	77	78	79	80	81	82	83	84	85	86
		750	71	72	73	74	75	76	77	78	79	79
	63 - 90	3000	-	-	-	-	-	-	-	-	-	-
		1500	85	86	87	88	89	90	91	91	92	92
		1000	77	78	79	80	81	81	82	82	83	84
		750	70	71	72	73	74	75	75	76	77	77

Table C-6: Enveloping surface sound pressure level

Refer to the following tables for the enveloping surface sound pressure level L_{pA} in dB(A) for bevel helical gear units without fan.

Type	i_N	n_1 in rpm	Gear unit size											
			1	2	3	4	5	6	7	8	9	10	11	12
B2	5 - 8	3000	75	81	84	88	-	-	-	-	-	-	-	-
		1500	63	69	72	75	78	80	82	83	84	86	87	88
		1000	<60	<60	66	70	72	73	76	77	78	79	81	82
		750	<60	<60	<60	63	65	66	69	71	72	73	74	75
	9 - 14	3000	73	77	80	83	86	87	-	-	-	-	-	-
		1500	61	64	67	71	74	75	77	79	80	81	83	84
		1000	<60	<60	61	65	67	69	72	73	74	76	77	78
		750	<60	<60	<60	<60	60	63	65	66	67	69	71	72
	16 - 22.4	3000	69	72	76	79	81	83	85	86	87	-	-	-
		1500	<60	60	63	66	69	71	72	74	75	77	78	80
		1000	<60	<60	<60	61	63	65	67	68	69	71	72	74
		750	<60	<60	<60	<60	<60	<60	60	62	63	64	66	67
B3	12.5 - 31.5	3000	-	-	77	81	84	86	87	88	90	-	-	-
		1500	-	-	65	68	71	74	75	76	77	79	81	83
		1000	-	-	<60	63	66	68	69	70	72	73	75	77
		750	-	-	<60	<60	<60	61	62	64	65	66	68	71
	35.5 - 56	3000	-	-	72	77	80	82	83	84	84	86	89	92
		1500	-	-	60	65	67	70	71	71	72	74	77	79
		1000	-	-	<60	<60	62	65	65	66	66	69	71	73
		750	-	-	<60	<60	<60	<60	<60	<60	<60	62	65	67

Type	i_N	n_1 in rpm	Gear unit size											
			1	2	3	4	5	6	7	8	9	10	11	12
B3	63 - 90	3000	-	-	69	73	76	84	80	80	81	83	84	88
		1500	-	-	<60	61	64	70	67	68	68	70	73	75
		1000	-	-	<60	<60	<60	63	62	62	62	65	68	70
		750	-	-	<60	<60	<60	<60	<60	<60	<60	<60	61	63
B4	80 - 125	3000	-	-	-	-	76	77	79	81	82	85	87	89
		1500	-	-	-	-	64	65	67	68	70	72	75	76
		1000	-	-	-	-	<60	<60	61	63	64	67	69	70
		750	-	-	-	-	<60	<60	<60	<60	<60	<60	62	64
	140 - 224	3000	-	-	-	-	72	74	76	77	78	81	84	85
		1500	-	-	-	-	60	61	63	65	66	68	71	72
		1000	-	-	-	-	<60	<60	<60	<60	61	63	65	67
		750	-	-	-	-	<60	<60	<60	<60	<60	<60	<60	<60
	250 - 400	3000	-	-	-	-	69	70	72	74	75	77	80	81
		1500	-	-	-	-	<60	<60	<60	62	63	65	67	69
		1000	-	-	-	-	<60	<60	<60	<60	<60	<60	62	63
		750	-	-	-	-	<60	<60	<60	<60	<60	<60	<60	<60

Table C-7: Enveloping surface sound pressure level

Type	i_N	n_1 in rpm	Gear unit size									
			13	14	15	16	17	18	19	20	21	22
B2	5 - 8	3000	-	-	-	-	-	-	-	-	-	-
		1500	89	90	93	-	-	-	-	-	-	-
		1000	83	84	86	88	89	-	-	-	-	-
		750	77	78	80	82	83	84	-	-	-	-
	9 - 14	3000	-	-	-	-	-	-	-	-	-	-
		1500	85	86	87	89	-	-	-	-	-	-
		1000	80	81	82	83	85	86	-	-	-	-
		750	73	74	76	77	78	79	-	-	-	-
	16 - 22.4	3000	-	-	-	-	-	-	-	-	-	-
		1500	81	82	85	85	-	-	-	-	-	-
		1000	75	77	79	80	81	81	-	-	-	-
		750	68	70	72	73	74	75	-	-	-	-
B3	12.5 - 31.5	3000	-	-	-	-	-	-	-	-	-	-
		1500	84	85	86	87	87	88	89	90	91	92
		1000	78	80	80	81	82	82	84	85	86	86

Type	i_N	n_1 in rpm	Gear unit size									
			13	14	15	16	17	18	19	20	21	22
B3	12.5 - 31.5	750	71	73	73	74	75	75	77	78	79	79
	35.5 - 56	3000	-	-	-	-	-	-	-	-	-	-
		1500	80	81	82	83	83	84	86	86	88	88
		1000	75	76	76	77	77	78	80	81	82	83
		750	68	69	70	70	71	72	74	74	75	76
	63 - 90	3000	89	90	-	-	-	-	-	-	-	-
		1500	76	78	78	79	79	80	82	83	84	84
		1000	71	72	73	73	74	75	76	77	78	79
		750	64	65	66	67	67	68	70	70	72	72
B4	80 - 125	3000	90	91	92	-	-	-	-	-	-	-
		1500	77	79	80	81	82	83	84	85	86	86
		1000	72	73	74	75	76	77	78	79	80	80
		750	65	66	68	68	69	71	71	72	73	74
	140 - 224	3000	86	87	89	89	90	92	-	-	-	-
		1500	73	75	76	77	78	79	80	81	82	82
		1000	68	69	71	71	72	74	75	75	76	77
		750	61	62	64	65	66	67	68	69	69	70
	250 - 400	3000	82	84	85	86	87	88	89	90	91	-
		1500	70	71	73	73	75	76	77	77	78	79
		1000	64	66	67	68	69	70	71	72	73	73
		750	<60	<60	<60	61	62	63	64	65	66	66

Table C-8: Enveloping surface sound pressure level

Refer to the following tables for the enveloping surface sound pressure level L_{pA} in dB(A) for helical gear units with fan.

Type	i_N	n_1 in rpm	Gear unit size										
			1	2	3	4	5	6	7	8	9	10	11	12
H2	6.3 - 10	3000	-	-	-	85	87	-	-	-	-	-	-	-
		1500	-	-	-	75	76	77	80	81	82	84	85	86
		1000	-	-	-	69	71	72	74	75	77	79	80	81
		750	-	-	-	66	68	69	70	72	73	75	76	77
	11.2 - 16	3000	-	-	-	84	86	87	91	-	-	-	-	-
		1500	-	-	-	73	75	77	79	80	81	82	85	88
		1000	-	-	-	68	69	70	72	73	75	77	79	80

Type	i_N	n_1 in rpm	Gear unit size											
			1	2	3	4	5	6	7	8	9	10	11	12
H2	11.2 - 16	750	-	-	-	64	66	67	69	70	71	73	74	76
	18 - 28	3000	-	-	-	83	84	85	88	90	92	-	-	-
		1500	-	-	-	71	73	75	77	78	80	82	84	86
		1000	-	-	-	65	67	68	71	72	73	75	77	78
		750	-	-	-	62	64	65	67	68	69	71	73	74
H3	22.4 - 35.5	3000	-	-	-	-	84	84	87	87	90	-	-	-
		1500	-	-	-	-	71	72	75	75	77	77	80	80
		1000	-	-	-	-	65	66	69	70	71	72	74	75
		750	-	-	-	-	62	62	66	67	67	68	70	70
	40 - 63	3000	-	-	-	-	84	84	86	86	89	89	92	93
		1500	-	-	-	-	70	71	73	74	76	76	79	79
		1000	-	-	-	-	64	65	67	68	69	70	73	73
		750	-	-	-	-	62	62	63	64	65	66	69	69
	71 - 112	3000	-	-	-	-	83	83	85	85	89	89	92	92
		1500	-	-	-	-	70	70	72	72	75	75	78	78
		1000	-	-	-	-	64	64	65	66	68	69	71	72
		750	-	-	-	-	61	61	62	62	64	65	67	67

Table C-9: Enveloping surface sound pressure level

Type	i_N	n_1 in rpm	Gear unit size									
			13	14	15	16	17	18	19	20	21	22
H2	6.3 - 10	3000	-	-	-	-	-	-	-	-	-	-
		1500	88	90	92	94	96	96	-	-	-	-
		1000	83	84	85	86	87	88	88	89	90	-
		750	79	80	81	82	83	83	84	84	85	85
	11.2 - 16	3000	-	-	-	-	-	-	-	-	-	-
		1500	90	91	92	93	95	95	-	-	-	-
		1000	82	83	84	85	85	86	86	87	87	87
		750	78	79	79	80	81	81	82	82	83	83
	18 - 28	3000	-	-	-	-	-	-	-	-	-	-
		1500	87	90	91	92	93	94	94	95	95	95
		1000	80	81	82	83	83	84	85	85	86	86
		750	75	77	78	79	79	80	80	81	81	81

Type	i_N	n_1 in rpm	Gear unit size									
			13	14	15	16	17	18	19	20	21	22
H3	22.4 - 35.5	3000	-	-	-	-	-	-	-	-	-	-
		1500	81	81	84	84	84	85	-	-	-	-
		1000	75	75	78	78	78	79	-	-	-	-
		750	71	72	74	74	75	76	-	-	-	-
	40 - 63	3000	-	-	-	-	-	-	-	-	-	-
		1500	80	80	83	82	83	83	-	-	-	-
		1000	73	74	77	77	77	77	-	-	-	-
		750	69	70	72	73	73	73	-	-	-	-
	71 - 112	3000	92	92	-	-	-	-	-	-	-	-
		1500	78	78	82	82	82	82	-	-	-	-
		1000	72	72	75	75	75	76	-	-	-	-
		750	68	68	71	71	71	72	-	-	-	-

Table C-10: Enveloping surface sound pressure level

Refer to the following tables for the enveloping surface sound pressure level L_{pA} in dB(A) for helical gear units without fan.

Type	i_N	n_1 in rpm	Gear unit size											
			1	2	3	4	5	6	7	8	9	10	11	12
H2	6.3 - 10	1500	-	-	-	71	74	75	76	77	79	79	80	81
		1000	-	-	-	66	69	70	71	72	74	74	75	76
		750	-	-	-	63	66	67	67	69	70	71	72	73
	11.2 - 16	1500	-	-	-	69	72	73	74	75	77	77	78	79
		1000	-	-	-	64	67	68	69	70	72	72	73	74
		750	-	-	-	61	64	65	66	67	69	69	70	71
	18 - 28	1500	-	-	-	66	69	70	71	72	74	74	75	76
		1000	-	-	-	61	64	65	66	68	69	69	70	71
		750	-	-	-	<60	61	62	63	64	66	66	67	68
H3	22.4 - 31.5	1500	-	-	-	-	68	69	73	74	74	75	77	77
		1000	-	-	-	-	63	65	68	69	69	71	72	73
		750	-	-	-	-	60	61	65	66	65	67	69	69
	35.5 - 63	1500	-	-	-	-	65	67	70	71	71	73	74	75
		1000	-	-	-	-	<60	62	65	66	66	68	69	70
		750	-	-	-	-	<60	<60	62	63	63	65	66	67
	71 - 112	1500	-	-	-	-	62	64	67	68	68	70	71	72
		1000	-	-	-	-	<60	<60	62	63	63	65	66	67

Type	i_N	n_1 in rpm	Gear unit size											
			1	2	3	4	5	6	7	8	9	10	11	12
H3	71 - 112	750	-	-	-	-	<60	<60	<60	<60	<60	62	63	64
H4	100 - 140	1500	-	-	-	-	-	-	66	67	68	69	70	71
		1000	-	-	-	-	-	-	62	63	63	64	65	66
		750	-	-	-	-	-	-	<60	<60	<60	61	62	63
	160 - 250	1500	-	-	-	-	-	-	64	65	66	66	68	68
		1000	-	-	-	-	-	-	<60	60	61	62	63	64
		750	-	-	-	-	-	-	<60	<60	<60	<60	60	61
	280 - 450	1500	-	-	-	-	-	-	61	62	63	64	65	66
		1000	-	-	-	-	-	-	<60	<60	<60	<60	60	61
		750	-	-	-	-	-	-	<60	<60	<60	<60	<60	<60

Table C-11: Enveloping surface sound pressure level

Type	i_N	n_1 in rpm	Gear unit size									
			13	14	15	16	17	18	19	20	21	22
H2	6.3 - 10	1500	81	82	84	85	85	86	-	-	-	-
		1000	76	77	80	80	80	81	83	83	84	-
		750	73	74	76	77	77	78	80	80	81	81
	11.2 - 16	1500	79	80	82	83	83	84	-	-	-	-
		1000	74	75	77	78	78	79	81	81	82	82
		750	71	72	74	75	75	76	77	78	79	79
	18 - 28	1500	77	78	80	80	81	82	83	84	84	85
		1000	72	73	75	75	76	77	78	79	79	80
		750	69	70	72	72	73	73	75	75	76	76
H3	22.4 - 31.5	1500	78	79	81	81	82	83	83	84	85	86
		1000	73	74	76	77	77	78	79	79	81	81
		750	70	71	73	73	74	75	75	76	77	78
	35.5 - 63	1500	76	76	78	79	79	80	81	81	83	83
		1000	71	72	73	74	75	75	76	77	78	78
		750	67	68	70	71	71	72	73	73	75	75
	71 - 112	1500	73	74	76	76	77	78	78	79	80	81
		1000	68	69	71	71	72	73	73	74	75	76
		750	65	66	68	68	69	70	70	71	72	72
H4	100 - 140	1500	72	73	75	75	76	76	77	78	78	78
		1000	67	68	70	70	71	72	72	73	73	74

Type	i_N	n_1 in rpm	Gear unit size									
			13	14	15	16	17	18	19	20	21	22
H4	100 - 140	750	64	64	66	67	68	68	69	69	70	70
	160 - 250	1500	69	70	72	73	73	74	74	75	75	76
		1000	64	65	67	68	68	69	70	70	71	71
		750	61	62	64	64	65	66	66	67	67	68
	280 - 450	1500	67	67	69	70	70	71	72	72	73	73
		1000	62	63	64	65	66	66	67	68	68	68
		750	<60	<60	61	62	62	63	64	64	65	65

Table C-12: Enveloping surface sound pressure level

Index

A

Air guide cover, 36
Air-oil cooler, 39, 40
Attachment points, 59
Auxiliary drive
  Checking, 123
  Checking the speed monitoring, 126
  Commissioning, 110
  Filling the overrunning clutch with oil, 122

B

Backstop, 35
  Commissioning, 109
  filling with oil, 122
  Principle of operation, 34
  replacing, 122
Bearing monitoring
  Acceleration sensor, 49
  Connecting, 102
  Resistance thermometer, 48
  Shock-pulse transducer, 48

C

Centrifugal disk, 34
Coarse filter
  Cleaning, 125
Coloured markings, 18
Cooling, 36
Cooling coil
  Commissioning, 111
  Cooling water flow rate, 38
  Design, 38
  Principle of operation, 37
Copyright, 15
Coupling, 43

D

Directions of rotation, 25
Disposal, 135
Documentation landscape, 15
Double change-over filter
  Cleaning, 125
Dry-running protection, 31

E

Environmental protection, 135
Equipment features, 26
Explosion protection regulations, 15
Eye bolts, 55

F

Fan, 36
Fastening bolts
  Bolt connection class, 104
  Bolts, 104
  Checking for tightness, 127
  Mating threads, 104
  Preload force, 105
  Tightening procedure, 104
  Tightening torque, 105
Fault, 128
Fault rectification, 128
Final work, 107

G

Gear unit components, 28
Gear unit designs, 25
Gear unit equipment, 27
Gear unit housing, 26
Gear unit markings, 18
Gear unit use, 22
General inspection of the gear unit, 127
Grease lubrication point, 27

H

Heating
  Commissioning, 111
  Design, 45
  Function, 44
  Heating elements, 44
  Temperature monitor, 45

I

Integration note, 24
Interval, 119
Irregularities in operation, 116

L

Lateral pulling, 55
Liability disclaimer, 14
Lubricant, 16

M

Maintenance activities, 119
Maintenance information, 119
Maintenance schedule, 119
Measures
during commissioning, 113
Prior to commissioning, 109
Mounting position, 59

N

Note about assembly, 59

O

Oil, 16
Oil expansion unit, 29
Oil filter, 43
Oil level indicator, 46
Oil supply, 29
Oil supply system, 39, 40, 41, 42, 43
Commissioning, 112
Oil temperature
Checking, 121
Oil temperature monitoring, 47
Operating data
Compliance with, 115
Oil, 115
Ordering spare parts, 137
Output shaft versions, 26

P

Protective equipment, 20
Pump, 43

R

Rating plate, 143
Example of model and size, 144
Resistance thermometer, 47
Connecting, 102
Rolling-contact bearings
Measure temperature, 126
Measuring the vibration levels, 126
Rotary shaft sealing ring, 30

S

Safety rules, 17
Scope of delivery, 53
Servicing activities, 119
Shaft bearings, 30
Shaft seal, 30
Shaft-mounted gear unit
Assembly, 77, 84, 91
Auxiliary plate, 82
Axial locking, 79
Dismantling, 80
End plate, 81, 82
Hydraulic pulling equipment, 82
Shear pulling, 55
Shipping documents, 53
Shrink disk
Checking, 124
Splash lubrication, 29

T

Taconite seal, 31
Taking out of service, 117
Technical specifications, 143
Temperature monitor
Connecting, 102
Transport information, 53
Transport symbols, 54
Troubleshooting, 128
Types of danger, 19

U

Unpacking, 60
Used oil, 135

W

Warning symbols, 19
Water-oil cooler, 41, 42

FLENDER GEAR UNITS

Gear unit
Assembly and operating instructions B5031-01en
Edition 07/2022

Flender GmbH
Alfred-Flender-Straße 77
46395 Bocholt
Germany

FLENDER