FLENDER GEAR UNITS

Gear unit

Assembly and operating instructions 5091en
Edition 06/2020

H..V, B..V

23...28



flender.com

FLENDER

FLENDER

FLENDER GEAR UNITS

Gear unit
5091en

Assembly and operating instructions

H..V, B..V
23...28

Introduction 1

Safety instructions 2

Description 3

Application planning 4

Assembly 5

Commissioning 6

Operation 7

Servicing 8

Service & Support 9

Disposal 10

Spare parts 11

Declaration of incorporation A

Declaration of conformity B

Technical data C

Original assembly and operating instructions
Edition 06/2020

Legal information

Warning notice system

This manual contains notices you have to observe in order to ensure your personal safety, as well as to prevent damage to property. The notices referring to your personal safety are highlighted in the manual by a safety alert symbol, notices referring only to property damage have no safety alert symbol. These notices shown below are graded according to the degree of danger.

⚠ **DANGER**
indicates that death or severe personal injury **will** result if proper precautions are not taken.

⚠ **WARNING**
indicates that death or severe personal injury **may** result if proper precautions are not taken.

⚠ **CAUTION**
indicates that minor personal injury can result if proper precautions are not taken.

NOTICE
indicates that property damage can result if proper precautions are not taken.

If more than one degree of danger is present, the warning notice representing the highest degree of danger will be used. A notice warning of injury to persons with a safety alert symbol may also include a warning relating to property damage.

Qualified Personnel

The product/system described in this documentation may be operated only by **personnel qualified** for the specific task in accordance with the relevant documentation, in particular its warning notices and safety instructions. Qualified personnel are those who, based on their training and experience, are capable of identifying risks and avoiding potential hazards when working with these products/systems.

Proper use of Flender products

Note the following:

⚠ **WARNING**
Flender products may only be used for the applications described in the catalog and in the relevant technical documentation. If products and components from other manufacturers are used, these must be recommended or approved by Flender. Proper transport, storage, installation, assembly, commissioning, operation and maintenance are required to ensure that the products operate safely and without any problems. The permissible ambient conditions must be complied with. The information in the relevant documentation must be observed.

Trademarks

All names identified by ® are registered trademarks of Flender GmbH. The remaining trademarks in this publication may be trademarks whose use by third parties for their own purposes could violate the rights of the owner.

Disclaimer of Liability

We have reviewed the contents of this publication to ensure consistency with the hardware and software described. Since variance cannot be precluded entirely, we cannot guarantee full consistency. However, the information in this publication is reviewed regularly and any necessary corrections are included in subsequent editions.

Flender GmbH
Alfred-Flender-Straße 77
46395 BOCHOLT
GERMANY

Document order number: 5091en
Ⓟ 12/2020 Subject to change

Copyright © Flender GmbH 2020.
All rights reserved

Table of contents

1 Introduction 11

1.1 General information 11

1.2 Lubricants 12

2 Safety instructions 15

2.1 Security notes 15

2.2 The five safety rules 15

2.3 General information 16

2.4 General warnings and symbols 17

2.5 Special types of danger and personal protective equipment 18

2.6 Correct use in hazardous zones (explosive atmospheres) 20

3 Description 23

3.1 General description 23

3.2 Output shaft versions 24

3.3 Housing 25

3.4 Oil supply to the gear unit 33
3.4.1 Dip lubrication 33
3.4.2 Pressure lubrication 33

3.5 Bearing arrangement of the shafts 36

3.6 Shaft seal 36
3.6.1 Rotary shaft sealing rings 36
3.6.2 Dry running protection 37
3.6.3 Taconite seal 37
3.6.4 Centrifugal disk 40
3.6.5 Oil retaining pipe 40

3.7 Cooling 41
3.7.1 Fan 42
3.7.2 Cooling coil 43
3.7.3 Mounted oil supply system 44
3.7.3.1 Mounted oil supply system with air-oil cooler 44
3.7.3.2 Mounted oil supply system with water-oil cooler 47
3.7.3.3 Pump 49
3.7.3.4 Oil filter 49
3.7.3.5 Pressure monitor 49
3.7.4 Separate oil supply system 49

3.8 Couplings 50

3.9 Shrink disk 50

3.10 Heating ... 51
3.10.1 Oil-level monitoring system for the heating elements ... 53
3.11 Oil level indicator ... 53
3.12 Oil level monitoring system ... 54
3.13 Oil temperature monitoring ... 54
3.14 Bearing monitoring ... 55
3.14.1 Bearing monitoring using a Pt 100 resistance thermometer ... 55
3.14.2 Bearing monitoring by shock-pulse transducer ... 57
3.14.3 Bearing monitoring by acceleration sensor ... 59
3.15 Speed encoder ... 61

4 Application planning ... 63

4.1 Scope of delivery ... 63
4.2 Transport ... 63
4.3 Attachment points ... 65
4.4 Special aspects of gear unit lubrication and preservation ... 68
4.4.1 Regreasing rolling-contact bearings ... 68
4.4.1.1 Grease-lubricated rolling-contact bearing ... 68

5 Assembly ... 71

5.1 General assembly instructions ... 71
5.2 Unpacking the gear unit ... 73
5.3 Gear unit assembly ... 74
5.3.1 Foundation ... 74
5.3.1.1 Mounting on a concrete foundation ... 75
5.3.2 Mounting ... 79
5.3.2.1 Mounting on a housing foot ... 79
5.3.2.2 Mounting on a mounting flange or block flange ... 83
5.3.3 Mounting the torque arm for the gear unit housing ... 88
5.3.3.1 Mounting the torque arm ... 88
5.3.4 Mounting the coupling flange on the output side ... 89
5.4 Shaft-mounted gear unit with hollow shaft and parallel keyway ... 90
5.4.1 Preparations ... 90
5.4.2 Assembly ... 91
5.4.2.1 Introduction ... 91
5.4.2.2 Mounting ... 92
5.4.2.3 Axial locking ... 93
5.4.3 Dismantling ... 94
5.5 Shaft-mounted gear unit with hollow shaft and spline according to DIN 5480 ... 97
5.5.1 Preparations ... 97
5.5.2 Assembly ... 98
5.5.2.1 Pulling on with integrated DU bushing ... 99
5.5.2.2 Axial locking ... 100
5.5.3 Dismantling ... 101
5.6 Shaft-mounted gear unit with hollow shaft and shrink disk ... 104

5.6.1 Assembly ... 104
5.6.1.1 Pulling on with integrated DU bushing ... 105
5.6.1.2 Mounting with DU bushing as a separate component ... 107
5.6.1.3 Axial locking ... 107
5.6.2 Dismantling the shaft-mounted gear unit ... 107

5.7 Shaft-mounted gear unit with flange coupling ... 108

5.8 Couplings ... 109

5.9 Connecting components ... 110
5.9.1 Gear units with mounted components ... 110
5.9.2 Connecting the cooling coil ... 111
5.9.3 Connecting the air-oil cooler ... 111
5.9.4 Connecting the water-oil cooler ... 112
5.9.5 Installing a separate oil supply system ... 113
5.9.6 Connecting the pressure monitor ... 113
5.9.7 Connecting the heating element ... 113
5.9.8 Connecting the oil-level monitoring system ... 114
5.9.9 Connecting the Pt 100 resistance thermometer ... 114
5.9.10 Connecting a speed encoder ... 114
5.9.11 Electrical connections ... 115

5.10 Tightening procedure ... 115
5.10.1 Introduction ... 115
5.10.2 Bolt connection classes ... 116
5.10.3 Tightening torques and preload forces ... 117

5.11 Final work ... 118

6 Commissioning ... 121

6.1 Measures prior to commissioning ... 121
6.1.1 Gear units with cooling coil ... 121
6.1.2 Gear units with oil supply system ... 122

6.2 Measures during commissioning ... 122
6.2.1 Heating ... 123

7 Operation ... 125

7.1 Operating data ... 125

7.2 Irregularities in operation ... 125

7.3 Taking the unit out of service ... 126

8 Servicing ... 127

8.1 General maintenance information ... 127

8.2 Maintenance schedule ... 128

8.3 Maintenance and servicing work ... 129
8.3.1 Cleaning the venting screw ... 129
8.3.2 Checking the oil temperature ... 130
8.3.3 Measuring the vibration levels of the rolling-contact bearings ... 130
8.3.4 Replenish grease in the oil retaining pipe ... 131
8.3.5 Checking the ignition protection system ... 132
8.3.6 Cleaning the fan and gear unit ... 132

8.3.7 Checking the cooling coil ... 133
8.3.8 Inspecting the shrink disk ... 134
8.3.9 Check that all of the fastening bolts are tight ... 134
8.3.10 General inspection of the gear unit ... 135
8.3.11 Final work ... 135
8.4 Possible faults ... 135
9 Service & Support ... 141
10 Disposal ... 143
11 Spare parts ... 145
A Declaration of incorporation ... 147
B Declaration of conformity ... 149
C Technical data ... 151
C.1 General technical data ... 151
C.2 Ambient temperature ... 154
C.3 Types ... 154
C.4 Weights ... 155
C.5 Enveloping surface sound pressure level ... 155
Index ... 159

Tables

Table 2-1 Symbols and markings ... 16
Table 2-2 General warnings ... 17
Table 3-1 Designs and associated directions of rotation ... 23
Table 3-2 Taconite seal versions ... 39
Table 3-3 Information about the specific heat output ... 51
Table 5-1 Information on tightening fastening bolts ... 116
Table 5-2 Preload forces and tightening torques ... 117
Table 7-1 Operating data ... 125
Table 8-1 Maintenance and servicing activities ... 128
Table 8-2 Possible faults and their rectification ... 136
Table C-1 ATEX marking ... 153
Table C-2 Enveloping surface sound pressure level ... 155
Table C-3 Enveloping surface sound pressure level ... 156
Table C-4 Enveloping surface sound pressure level ... 156
Table C-5 Enveloping surface sound pressure level ... 157

Figures

Figure 3-1 Output shaft versions ... 24
Figure 3-2 Output shaft versions for agitator gear units ... 25
Figure 3-3 Sign: Lubrication point ... 26
Figure 3-4 Gear unit equipment on gear units of type H..V with oil expansion unit ... 26
Figure 3-5 Gear unit equipment on gear units of type B..V with oil expansion unit ... 27
Figure 3-6 Gear unit equipment on gear units of type H..V with mounted oil supply system ... 28
Figure 3-7 Gear unit equipment on gear units of type B..V with mounted oil supply system ... 28
Figure 3-8 Aerator gear unit, type H.BV ... 29
Figure 3-9 Aerator gear unit, type B.BV ... 30
Figure 3-10 Gear unit with mounting flange (e.g. H3SV with oil expansion unit) ... 31
Figure 3-11 Gear unit with coupling flange at the output ... 32
Figure 3-12 Mounted oil supply system with flange pump for types H..V: ... 34
Figure 3-13 Mounted oil supply system with flange pump for types B..V: ... 34
Figure 3-14 Mounted oil supply system with motor pump for types H..V: ... 35
Figure 3-15 Mounted oil supply system with motor pump for types B..V: ... 35
Figure 3-16 Rotary shaft sealing ring ... 36
Figure 3-17 Dry running protection ... 37
Figure 3-18 Taconite seal ... 38
Figure 3-19 Design variants of taconite seals ... 39
Figure 3-20 Centrifugal disk ... 40
Figure 3-21 Oil retaining pipe ... 41
Figure 3-22 Gear unit fan ... 42
Figure 3-23 Cooling coil connections ... 44
Figure 3-24 Oil supply system with air-oil cooler mounted on gear unit, type B..V ... 45
Figure 3-25 Oil supply system mounted on gear unit, types H..V: ... 46
Figure 3-26 Oil supply system with water-oil cooler mounted on gear units, types H..V ... 48
Figure 3-27 Oil supply system with water-oil cooler mounted on gear units, types B..V ... 48
Figure 3-28 Heating for gear units with oil expansion unit, types H..V and B..V ... 52
Figure 3-29 Heating for gear units without oil expansion unit, types H..V and B..V ... 52
Figure 3-30 Oil temperature monitoring ... 55
Figure 3-31 Bearing monitoring using a Pt 100 resistance thermometer at gear units, type H2.V: ... 56
Figure 3-32 Bearing monitoring using a Pt 100 resistance thermometer at gear units, type B3.V: ... 57
Figure 3-33 Bearing monitoring using shock-pulse transducers at gear units, type H2.V: ... 58
Figure 3-34 Bearing monitoring using shock-pulse transducers at gear units, type B3.V: ... 59
Figure 3-35 Fully assembled acceleration sensor (A), and threaded connector (B) for variants 1 to 4 ... 60
Figure 3-36 Fully assembled acceleration sensor (C), and the threaded connector (D) for variants 5A and 5B ... 60

Figure 3-37 Speed encoder ... 61
Figure 4-1 Transport symbols ... 65
Figure 4-2 Shear and lateral pulling when using eye bolts ... 66
Figure 4-3 Position of the attachment points for gear units, type H..V and B..V ... 67
Figure 4-4 Position of the attachment points for gear units, type H..V with motor ... 67
Figure 4-5 Position of the attachment points for gear units, type B..V with motor: ... 68
Figure 4-6 Lubrication point for the lower output shaft bearing for type H.BV with oil retaining pipe: ... 69
Figure 4-7 Lubrication point for the lower output shaft bearing for type B.BV with oil retaining pipe ... 69
Figure 4-8 Sign: Lubrication point ... 69
Figure 5-1 Foundation block ... 75
Figure 5-2 Inserted anchor bolt ... 76
Figure 5-3 Tightened anchor bolt ... 77
Figure 5-4 Alignment surface ... 81
Figure 5-5 Alignment surfaces at the gear unit ... 82
Figure 5-6 Gear unit with mounting flange or block flange ... 86
Figure 5-7 Gear unit with hollow output shaft ... 88
Figure 5-8 Torque arm for the gear unit housing ... 89
Figure 5-9 Preparations for gear units with a hollow shaft and parallel keyway ... 91
Figure 5-10 Screw spindle for gear units with hollow shaft and parallel keyway ... 93
Figure 5-11 Dismantling using an end plate ... 95
Figure 5-12 Dismantling using hydraulic pulling equipment ... 96
Figure 5-13 Preparation for gear units with hollow shaft and spline ... 98
Figure 5-14 Mounting process with integrated DU bushing for gear units with a hollow shaft and spline ... 100
Figure 5-15 Dismantling procedure with end plate for gear units with hollow shaft and spline: ... 102
Figure 5-16 Dismantling using hydraulic pulling equipment for gear units with hollow shaft and spline ... 103
Figure 5-17 Preparation for gear units with hollow shaft and shrink disk ... 106
Figure 5-18 Possible displacements ... 109
Figure 5-19 Alignment process based on the example of a flexible coupling ... 110
Figure 8-1 Lubrication points ... 131
Figure C-1 Rating plate ... 151

Introduction 1

Naming convention

This product, which can be used as a gear reduction unit or multiplier gear unit, is referred to below as "gear unit".

1.1 General information

Purpose of the operating instructions

These operating instructions describe the gear unit and provide information about handling it - from assembly to maintenance.

Please keep these operating instructions for later use. Please read these operating instructions prior to handling the gear unit and follow the information in them.

Note

Disclaimer

Please make sure that every person who is commissioned to work on the gear unit has read and understood these operating instructions prior to handling the gear unit and adheres to all of the points. Failure to observe these operating instructions can cause product or property damage or personal injury.

Flender does not accept any liability for damage or operating failures which are due to non-adherence to these operating instructions.

The gear unit described in these instructions reflects the state of technical development at the time these operating instructions went to print.

In the interest of technical advancements, Flender reserves the right to make changes to the individual components and accessories which are considered necessary for improving their performance and safety, while maintaining their essential features.

ATEX Directive

The term "ATEX Directive" used in these instructions stands for the harmonization legislation of the European Union in compliance with the declaration of conformance for equipment and protective systems for correct use in hazardous zones.

Basic knowledge required

In order to understand these operating instructions, you will need the following general knowledge about gear units. You will also need a basic understanding of the following topics:

- Application planning
- Assembly
- Commissioning
- Maintenance

Documentation landscape

These operating instructions form part of the delivery of your gear unit.

These operating instructions form part of the complete documentation supplied with the gear unit. The complete documentation encompasses other documents, including:

- Data sheet
- List of equipment
- Dimension drawing
- Operating instructions for gear unit lubrication and preservation BA 7300
- Operating instructions for mounted components
- Operating instructions for third-party vendor devices

Copyright

The copyright for these operating instructions is held by Flender.

Without the authorisation of Flender, these operating instructions may not be used wholly or in parts for competitors' purposes or be given to third parties.

If you have any technical queries, please contact one of our Customer Services addresses (Page 141).

1.2 Lubricants

The quality of the oil used must meet the requirements of the operating instructions BA 7300, which is provided as a separate item, otherwise the warranty provided by Flender will be void. Flender urgently recommends using one of the oils listed in BA 7300, all of which have been appropriately tested and meet the requirements.

To avoid misunderstandings, Flender points out that, by making this recommendation, Flender is not approving the product in the sense of expressing a warranty for the quality of the lubricants supplied by your supplier. Every lubricant manufacturer is required to guarantee the quality of his/her products.

Information such as oil type, oil viscosity and required oil quantity can be found on the rating plate of the gear unit and in the documentation supplied with the gear unit.

The oil quantity specified on the rating plate is an approximate value. The actual quantity of oil required is determined by the marking on the oil dipstick or oil sight glass.

The operating instructions for the current lubricant recommendations of Flender can also be viewed in the Internet (https://www.flender.com/lubricants).

The oils listed there undergo continuous testing. As a result, the recommended oil types might in future be removed from the list or replaced by more advanced oils.

Flender recommends regular inspection to ascertain whether the selected lubricating oil is still approved by Flender. If it is not, another brand of oil should be selected instead.

Safety instructions 2

2.1 Security notes

Flender offers products and solutions with industrial security functions, which support the safe and secure operation of plants, systems, machines and networks.

In order to safeguard plants, systems, machines and networks against cyber threats it is necessary to implement (and continually maintain) a holistic industrial security concept that corresponds to the current state of the art. Flender products and solutions undergo continuous development in this respect.

Customers are responsible for preventing unauthorised access to their plants, systems, machines and networks. These systems, machines and components shall be connected to the company network or the Internet only when and to the extent that this is absolutely necessary and appropriate protective measures (e.g. firewalls and/or network segmentation) shall be taken.

You can find further information about possible protection measures as part of Industrial Security in the following international series of standards, for example: IEC 62443 "Network and system security".

Flender products and solutions undergo continuous development in order to make them even safer. Flender strongly recommends that you regularly implement product updates as soon as they become available and that you only use the current product versions. Use of older or no longer supported versions can increase the risk of cyber threats.

2.2 The five safety rules

In order to protect yourself and prevent any damage to property, always observe the safety relevant information and the following five safety rules (as per EN 50110-1 "Working on isolated equipment") when working on electrical components of the plant.

Prior to starting work on the machine, follow the safety rules listed below:

1. Disconnect
   Also disconnect auxiliary circuits such as the anti-condensation heater
2. Safeguard against restart
3. Ensure that the system is de-energised
4. Earth and short circuit
5. Cover or cordon off adjacent live parts

When all the work is complete, cancel the safety measures in the reverse sequence.

2.3 General information

Introduction

All work on the gear unit should be performed with care and only by qualified personnel.

Symbols on the gear unit

The following symbols apply to the gear unit; some of which are found as coloured markings on the gear unit:

Table 2-1 Symbols and markings

Points labelled on the gear unit	Symbol	Coloured markings
Earth connection point		
Air relief point		yellow
Oil filling point		yellow
Oil draining point		white
Oil level indicator		red
Oil level measurement		red
Oil overflow		
Connection point for vibration monitoring		
Lubrication point		red
Apply grease		
Lifting eye		
Eye bolt		

Points labelled on the gear unit	Symbol	Coloured markings
Do not unscrew		
Alignment surface, horizontal		
Alignment surface, vertical		
These symbols indicate the oil level checking procedure using the oil dipstick.	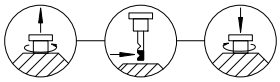	
These symbols indicate that the oil dipstick must be firmly screwed in.	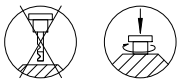	

2.4 General warnings and symbols

The following table contains general warnings and their associated symbols.

Table 2-2 General warnings

ISO	ANSI	Warning
		Warning - hazardous electrical voltage
		Warning - explosive substances
	---	Warning - entanglement hazard
	---	Warning - hot surfaces
	---	Warning - substances that can irritate or which are hazardous to health
	---	Warning - caustic substances
	---	Warning - suspended load
	---	Warning - hand injuries
		ATEX certification

2.5 Special types of danger and personal protective equipment

Requirements

Fulfil the following requirements before commencing work on the gear unit:

- Ensure that the oil pressure lines are depressurised.
- Only perform work on the gear unit when it is not in operation.
- Disconnect electrical systems from the power supply.



⚠ DANGER

Electric shock

Live parts can cause electric shock.

Ensure that the entire plant is de-energised before starting electrical installation work.

Protective equipment

Wear the following personal protective equipment when handling the gear unit:

- Safety shoes
- Overalls
- Helmet
- Safety gloves
- Safety goggles

⚠ WARNING

Risk of eye injury

Small foreign particles such as sand or dust can enter the cover plates of the rotating parts and be hurled back by them.

Wear safety goggles.

Dangers during operation

Damage to the gear unit is possible.

Switch the gear unit to standstill immediately if inexplicable changes are noticed during operation. Such changes may include unusual gear unit noise or a significant increase in operating temperature.

⚠ WARNING

Risk of falling

There is an increased risk of falling when standing or walking on the gear unit during operation.

Only walk or stand on the gear unit and its mounted components for maintenance and repair work when it is at a standstill. Do not walk or stand on shaft ends, protection covers, mounted components or pipes.



⚠ WARNING

Danger to life through rotating or moving parts

There is danger that rotating or moving parts may catch hold of you or pull you in.

Secure rotating and/or moving parts against contact using safeguards.

Surface temperature

The surface temperatures of the gear unit can become very extreme depending on the operating conditions.



⚠ WARNING

Risk of burns

Possible risk of serious burn injury from hot surfaces (> 55 °C).

Wear suitable protective gloves and protective clothing.

⚠ WARNING

Risk of scalding

Risk of serious injury possible through escaping hot operating media when these are being changed.

Wear suitable protective gloves, safety goggles and protective clothing.

⚠ WARNING

Danger due to low temperatures

Possible risk of serious injuries due to frost (pain, numbness, frostbite) on cold surfaces (< 0 °C).

Wear suitable protective gloves and protective clothing.

Chemical substances

Injuries can be sustained when using chemical substances.



⚠ WARNING

Risk of chemical burns due to chemical substances

There is a risk of chemical burns when handling aggressive cleaning agents.

Please observe the manufacturer's guidelines on how to handle cleaning agents and solvents. Wear suitable protective equipment (gloves, safety goggles). Please use binding agents to immediately clear up any spilt solvent.



⚠ CAUTION

Risk of injury due to chemically aggressive operating materials

There is a risk of injury to eyes and hands when handling chemically aggressive operating materials.

Please observe the safety instructions in the data sheets of the oil used. Wear suitable protective equipment (gloves, safety goggles). Use an oil-binding agent to immediately clean up spilt oil.

2.6 Correct use in hazardous zones (explosive atmospheres)

Only use the gear unit according to the conditions specified in the service and delivery contract and the technical data in the annex (Page 151). Deviating operating conditions are considered improper use. The user or owner of the machine or plant is solely liable for any resulting damage.

When using the gear unit please specifically observe the following:

- Do not make any modifications to the gear unit which go beyond the permissible handling described in these operating instructions. This also applies to safety features designed to prevent accidental contact.
- Only ever use original spare parts.
  Other spare parts are not tested and approved by Flender. Non-approved spare parts may possibly change the design characteristics of the gear unit and thus impair its active or passive safety.
  Flender will accept no liability or warranty whatsoever for damage occurring as a result of the use of non-approved spare parts. The same applies to any accessories which were not supplied by Flender.
- All mounted components must strictly comply with the requirements laid down in the ATEX directive.

If you have any queries, please contact Customer Services (Page 141).



⚠ WARNING

An explosive atmosphere can be ignited

An explosive atmosphere can be ignited if mounted components are used that do not comply with the ATEX directive.

All mounted components must strictly comply with the requirements laid down in the ATEX directive.

Connect basic electrical equipment (e.g. monitoring devices, switches, Pt 100 measuring resistors) that have no marking according to the ATEX directive using suitable isolating amplifiers so that intrinsic safety is guaranteed.

⚠ WARNING

Risk of falling

Risk of possible serious injury through falling.

Only walk or stand on the gear unit for maintenance and repair work when it is at a standstill. Do not walk or stand on shaft ends, protection covers, mounted components or pipes.

Gear unit use

When using the gear unit, please observe the following basic rules:

- Ensure that the gear unit is operationally safe.
- The gear unit should only be operated, maintained or repaired by authorised, trained and suitably qualified personnel.
- The relevant work safety and environmental protection regulations must be complied with at all times during transport, assembly, dismantling, operation, maintenance and servicing.
- The outside of the gear unit must not be cleaned using high-pressure cleaning equipment.
- No welding work must be performed on the gear unit or on parts connected to it. The gear unit and any parts connected to it must not be used as an earthing point for electric-welding operations. Gearing and rolling-contact bearings might be irreparably damaged by welding.
- Establish the appropriate potential equalisation connections.



⚠ WARNING

An explosive atmosphere can be ignited

An explosive atmosphere can be ignited if sparking occurs as a result of a gear unit that has not been earthed.

Perform potential equalisation in accordance with the applicable regulations and guidelines.

Threaded holes are available on the gear unit to establish an earth connection. This work must always be done by specialist electricians.

- In the case of gear units that are operated in combination with electrical machines that generate current or through which current flows (e.g. motors and generators), take measures to ensure that no current can flow through the gear unit.
  Current flowing through the gear unit can result in irreparable damage to rolling-contact bearings and gearing. Short circuits, voltage flashovers and deposits of conductive dust, for example, can all allow current to flow.
  Use insulators and earth the gear unit properly.
- When removing any protective devices, retain their fixings safely.
- Removed protective devices must be re-fitted prior to starting up.
- Pay attention to the notices attached to the gear unit such as the rating plate, direction arrow symbol etc. Notices must not be concealed by paint or dirt. Replace missing plates.
- Bolts which have been damaged during assembly or disassembly work must be replaced with new ones of the same strength class and type.

⚠ DANGER

Danger to life due to live system

Death or serious injury will occur.

Always shut down the gear unit and any oil supply system (whether separate or mounted on the gear unit) before you carry out any work. Secure the drive unit against being operated accidentally as follows:

- Turn off the key-operated switch.
- Remove the fuses in the power supply.
- Attach a notice to the start switch, clearly stating that work is being carried out on the gear unit.

Ensure that the entire unit is load-free so that no danger is posed when you start to dismantle components.



⚠ WARNING

An explosive atmosphere can be ignited

An explosive atmosphere can be ignited if electrostatic discharge occurs due to the coating becoming charged.

Carefully ensure that highly efficient charge generating mechanisms, which can cause layers and coatings to be electrostatically charged, are reliably avoided.

Reactivating the gear unit

When installing the gear unit in machines or systems, the machine or system manufacturers must ensure that the regulations, notes and descriptions contained in these operating instructions are incorporated in their own operating instructions.

Description

3

3.1 General description

The FLENDER® gear unit (referred to below simply as "gear unit") described in these operating instructions has been developed to drive a wide spectrum of machines in the most diverse range of industrial sectors. This series of gear units is suitable for wastewater systems - and applications in the chemical, foodstuff and plastics industries, for example.

The helical gear unit is available as a two, three, or four-stage unit. The bevel-helical gear unit is available as a three or four-stage unit. These are designed for vertical mounting.

It can essentially be operated in both directions of rotation. Gear units equipped with backstop or overrunning clutch are the exceptions in this case. Flender must be consulted if, for these versions, the direction of rotation is to be reversed.

Designs

Various shaft arrangements (versions and directions of rotation) are possible. These are depicted schematically as a solid shaft below. The direction of rotation arrows indicate the dependency of the direction of rotation of the input and output shafts.

Table 3-1 Designs and associated directions of rotation

Design	Type				
	H2.V	H3.V	H4.V	B3.V	B4.V
A	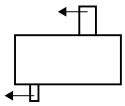	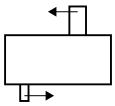	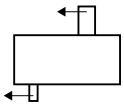	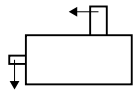	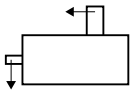
B	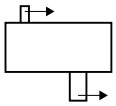	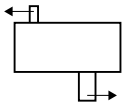	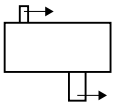	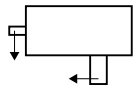	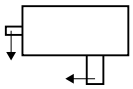
C	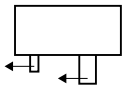	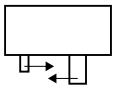	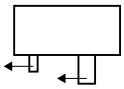	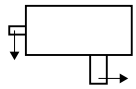	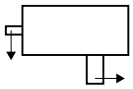
D	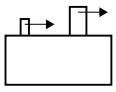	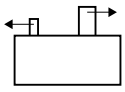	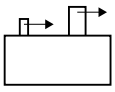	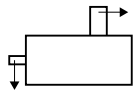	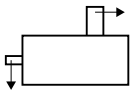
E	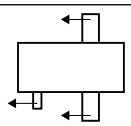	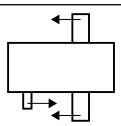	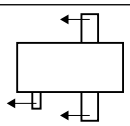	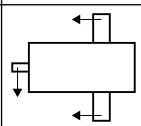	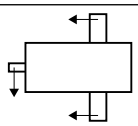
F	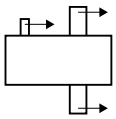	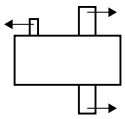	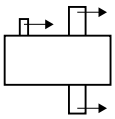	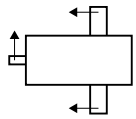	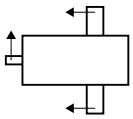

Design	Type				
	H2.V	**H3.V**	**H4.V**	**B3.V**	**B4.V**
G	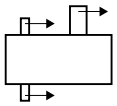	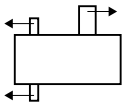	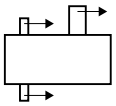	---	---
H	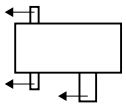	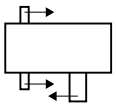	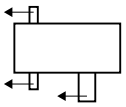	---	---
I	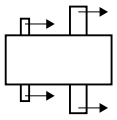	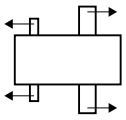	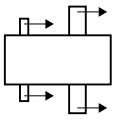	---	---

When an auxiliary drive is mounted (as maintenance or load drive), the assignment of the direction of rotation to the specific version is defined in the dimension drawing.

NOTICE
Destruction of the gear unit or parts of the gear unit due to incorrect direction of rotation is possible. Depending on the specific contract, the gear unit can have one direction of rotation if it is equipped with a backstop or overrunning clutch.

3.2 Output shaft versions

The following versions of output shaft are available:

- S = solid shaft
- H = hollow shaft with parallel keyway
- D = hollow shaft for shrink disk
- K = hollow shaft with spline according to DIN 5480

The available versions of output shaft are illustrated in the diagram below:

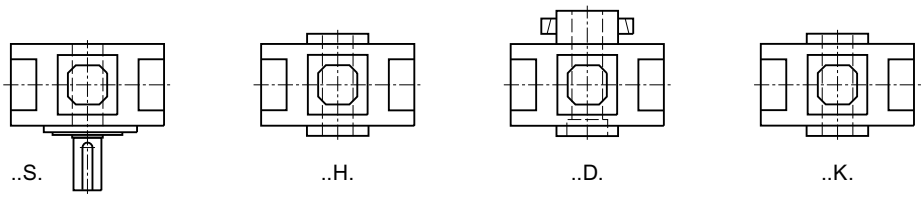

S Solid shaft
H Hollow shaft with parallel keyway
D Hollow shaft for shrink disk
K Hollow shaft with spline according to DIN 5480

Figure 3-1 Output shaft versions

The following diagram shows the possible output shaft versions for agitator gear units:

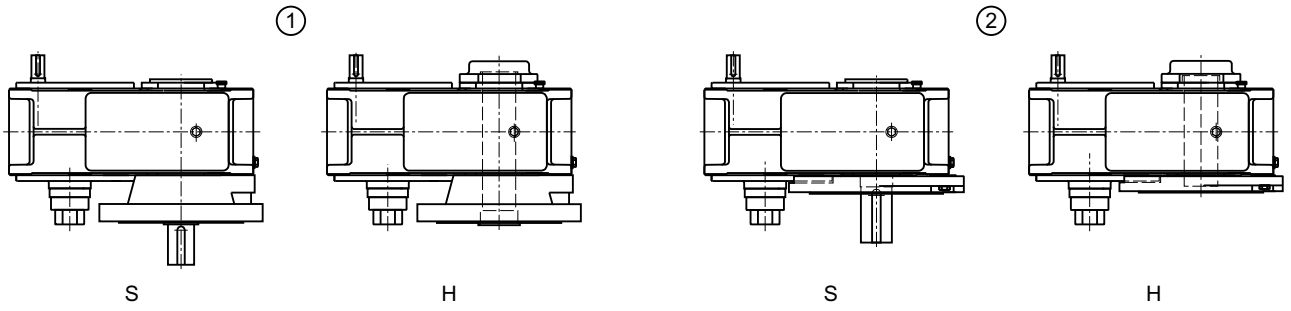

① Gear unit with mounting flange
② Gear unit with block flange
S Solid shaft
H Hollow shaft with parallel keyway

Figure 3-2 Output shaft versions for agitator gear units

Further information

Further information, a detailed illustration of the gear unit and the position of the mounted components can be found in the dimension drawing in the complete documentation for the gear unit.

3.3 Housing

Introduction

The housing is made of cast iron. When specified, the housing can also be manufactured out of steel.

The gear unit housing has the following features:

- Attachment points for transporting the gear unit (from gear unit size 23 and higher, use a sling swivel (Page 65))
- Inspection cover for inspection
- Oil filling point for refilling with oil
- Oil sight glass, oil level indicator or dipstick for checking the oil level
- Oil drain screw or oil drain valve for changing the oil
- Air filter or wet-air filter for ventilation and bleeding

Further information

Further information, a detailed illustration of the gear unit and the position of the mounted components can be found in the dimension drawing in the complete documentation for the gear unit.

The lubrication points are designated using the following sign:

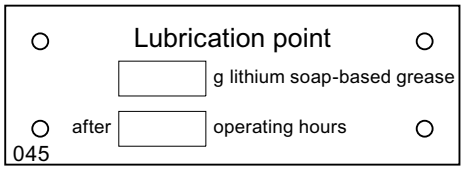

Figure 3-3 Sign: Lubrication point

Gear unit equipment

The diagram below shows the available gear unit equipment on gear units of type H..V with oil expansion unit

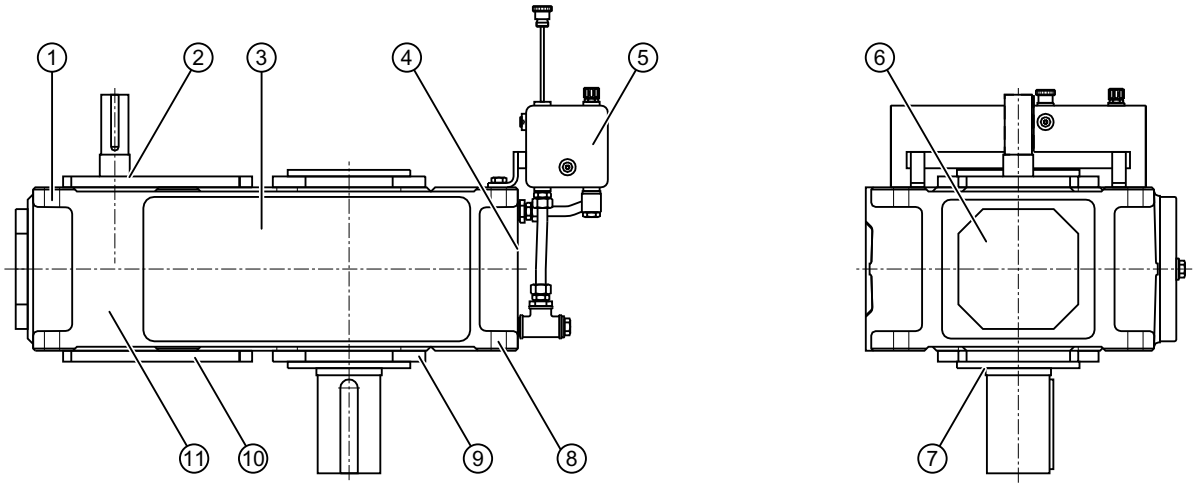

① Lifting eye
② Shaft seal
③ Inspection and/or assembly cover
④ Rating plate
⑤ Oil expansion unit
⑥ Cover
⑦ Shaft seal
⑧ Gear unit fastening
⑨ Cover
⑩ Cover
⑪ Housing

Figure 3-4 Gear unit equipment on gear units of type H..V with oil expansion unit

The diagram below shows the available gear unit equipment on gear units of type B..V with oil expansion unit:

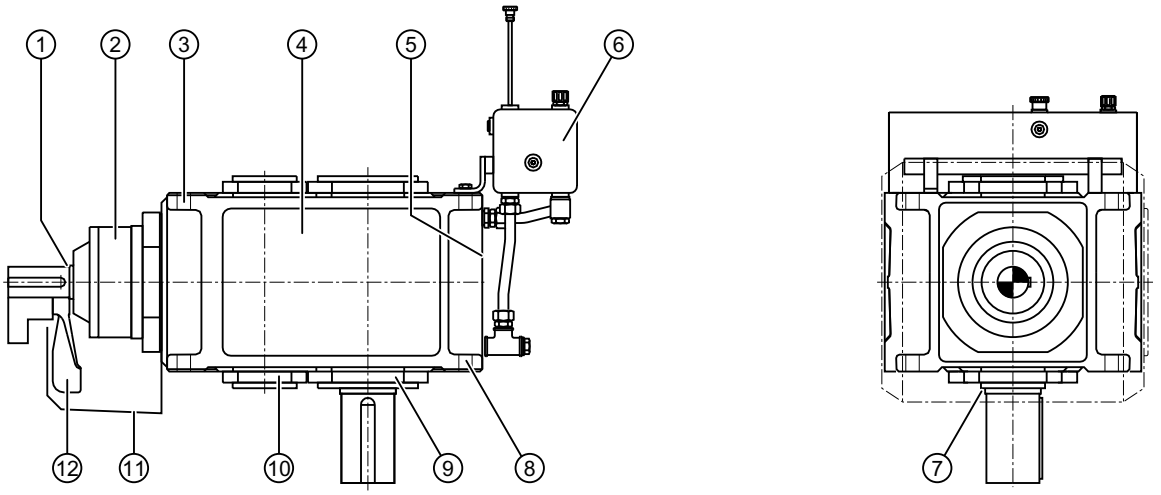

① Shaft seal
② Bearing neck
③ Lifting eye
④ Inspection and/or assembly cover
⑤ Rating plate
⑥ Oil expansion unit
⑦ Shaft seal
⑧ Gear unit fastening
⑨ Cover
⑩ Cover
⑪ Air guide cover
⑫ Fan

Figure 3-5 Gear unit equipment on gear units of type B..V with oil expansion unit

Further information

Further information, a detailed illustration of the gear unit and the position of the mounted components can be found in the dimension drawing in the complete documentation for the gear unit.

The diagram below shows the available gear unit equipment on gear units of type H..V with mounted oil supply system:

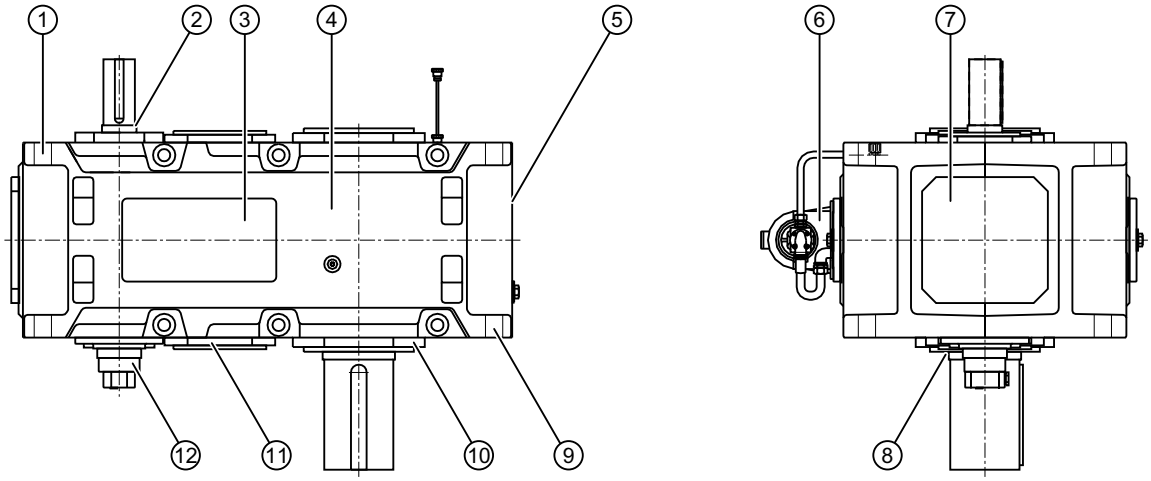

① Lifting eye
② Shaft seal
③ Inspection and/or assembly cover
④ Housing
⑤ Rating plate
⑥ Motor pump (optional)
⑦ Cover
⑧ Shaft seal
⑨ Gear unit fastening
⑩ Cover
⑪ Cover
⑫ Flange pump (optional)

Figure 3-6 Gear unit equipment on gear units of type H..V with mounted oil supply system

The diagram below shows the available gear unit equipment on gear units of type B..V with mounted oil supply system:

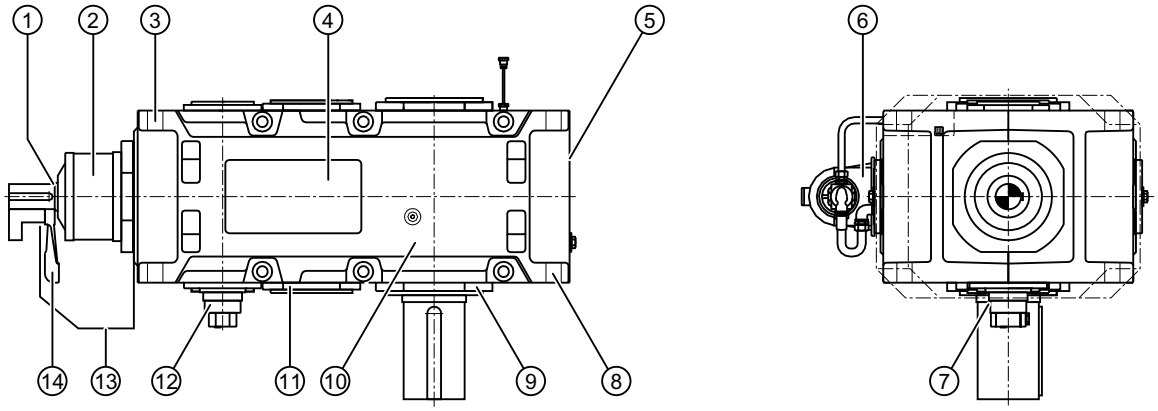

① Shaft seal
② Bearing neck
③ Lifting eye
④ Inspection and/or assembly cover
⑤ Rating plate
⑥ Motor pump (optional)
⑦ Shaft seal
⑧ Gear unit fastening
⑨ Cover
⑩ Housing
⑪ Cover
⑫ Flange pump (optional)
⑬ Air guide cover
⑭ Fan

Figure 3-7 Gear unit equipment on gear units of type B..V with mounted oil supply system

Further information

Further information, a detailed illustration of the gear unit and the position of the mounted components can be found in the dimension drawing in the complete documentation for the gear unit.

Aerator gear unit

The output shaft rotates in an oil retaining pipe (Page 40). This prevents the gear unit oil from escaping at the end of the shaft.

An oil pump that is flanged onto the unit or a motor pump is used to supply the gear unit with oil.

The following diagram shows an aerator gear unit, type H.BV:

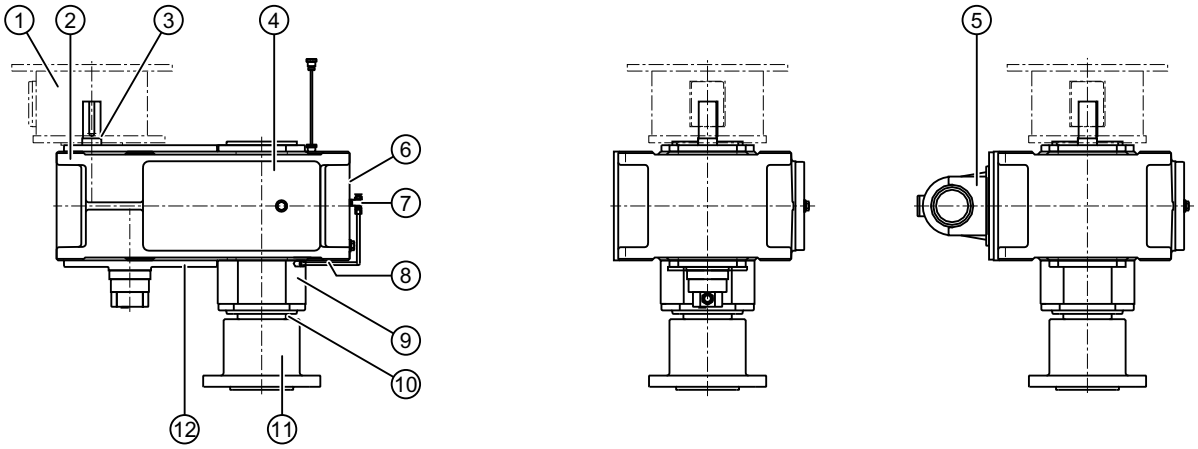

① Motor bell housing
② Lifting eye
③ Shaft seal
④ Inspection and/or assembly cover
⑤ Motor pump (optional)
⑥ Rating plate
⑦ Lubrication point
⑧ Gear unit fastening
⑨ Bearing neck
⑩ Shaft seal
⑪ Coupling flange
⑫ Cover

Figure 3-8 Aerator gear unit, type H.BV

The following diagram shows an aerator gear unit, type B.BV:

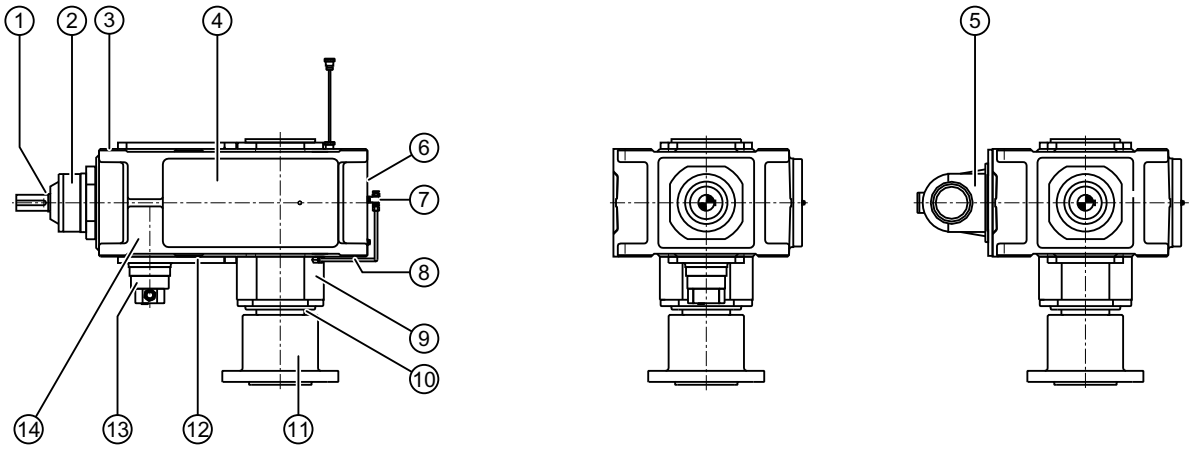

① Shaft seal
② Bearing neck
③ Lifting eye
④ Inspection and/or assembly cover
⑤ Motor pump (optional)
⑥ Rating plate
⑦ Lubrication point
⑧ Gear unit fastening
⑨ Bearing neck
⑩ Shaft seal
⑪ Coupling flange
⑫ Cover
⑬ Flange pump (optional)
⑭ Housing

Figure 3-9 Aerator gear unit, type B.BV

Further information

Further information, a detailed illustration of the gear unit and the position of the mounted components can be found in the dimension drawing in the complete documentation for the gear unit.

Gear unit with mounting flange

The following diagram shows a gear unit with mounting flange (e.g. H3SV with oil expansion unit):

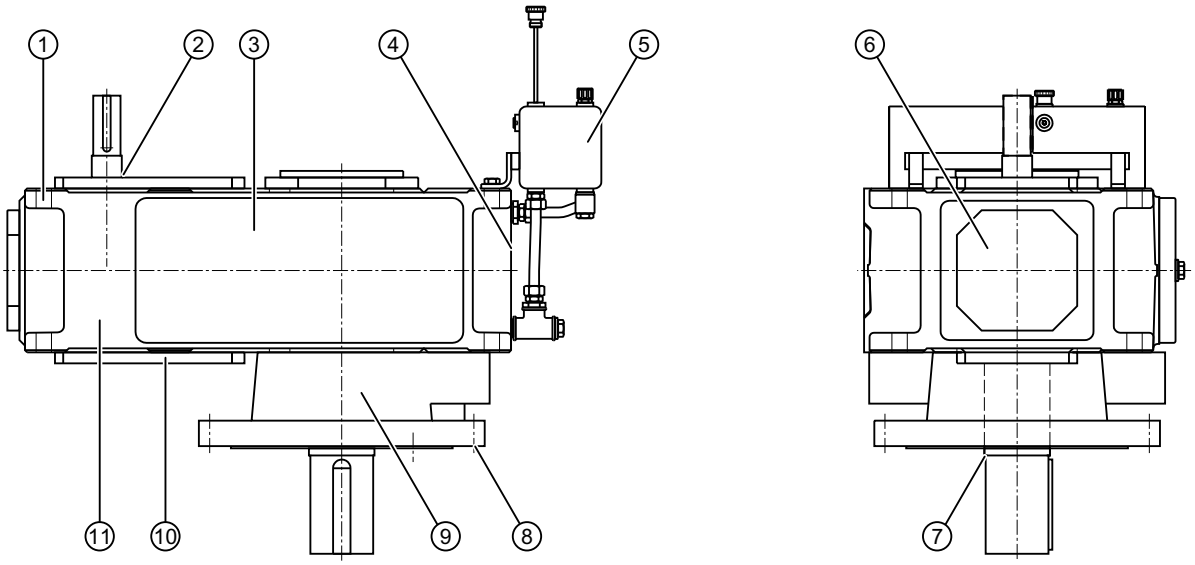

① Lifting eye
② Shaft seal
③ Inspection and/or assembly cover
④ Rating plate
⑤ Oil expansion unit
⑥ Cover
⑦ Shaft seal
⑧ Gear unit fastening
⑨ Mounting flange
⑩ Cover
⑪ Housing

Figure 3-10 Gear unit with mounting flange (e.g. H3SV with oil expansion unit)

Further information

Further information, a detailed illustration of the gear unit and the position of the mounted components can be found in the dimension drawing in the complete documentation for the gear unit.

Gear unit with coupling flange at the output

The diagram below shows a gear unit with coupling flange at the output:

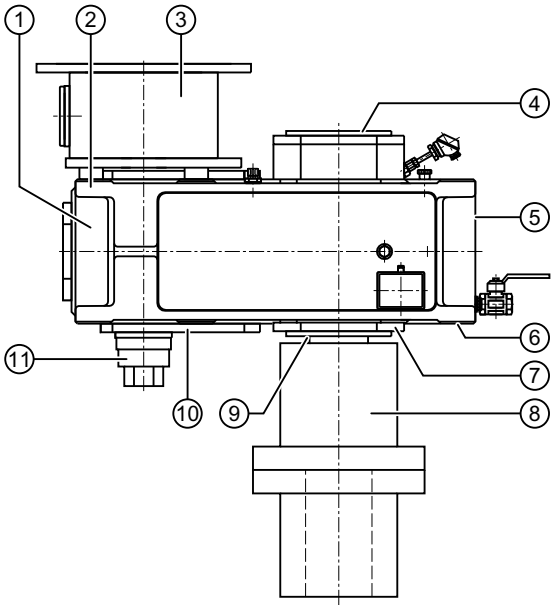

① Housing
② Lifting eye
③ Motor bell housing
④ Cover
⑤ Rating plate
⑥ Gear unit fastening
⑦ Cover
⑧ Coupling flange
⑨ Shaft seal
⑩ Cover
⑪ Flange pump

Figure 3-11 Gear unit with coupling flange at the output

Further information

Further information, a detailed illustration of the gear unit and the position of the mounted components can be found in the dimension drawing in the complete documentation for the gear unit.

3.4 Oil supply to the gear unit

Introduction

The oil supply to the various gear unit components can be implemented using the following oil supply variants:

- Dip lubrication
- Pressure lubrication
- Combination of both oil supply variants

3.4.1 Dip lubrication

Unless otherwise agreed by contract, the gearing and rolling-contact bearings are supplied with an adequate quantity of oil by splash lubrication.

In the vertical mounting position, all gears and rolling-contact bearings are submersed in oil. The space required for oil to expand is provided in the form of an oil expansion unit that is screwed onto the unit (Page 25).

3.4.2 Pressure lubrication

At high input speeds or high gear circumferential velocities, depending on the particular contract, splash lubrication can be supplemented or replaced by pressure lubrication.

With pressure lubrication, the rolling-contact bearings and gears located above the oil level are adequately supplied with oil through pipes.

Designs

The following designs are possible:

- Mounted oil supply system
- Separate oil supply system

Further information

Additional information and a detailed illustrated description of the gear unit and the oil supply system can be found in the dimension drawing in the complete gear unit documentation.

Additional information about the oil supply system can be found in the separate data sheet, in the list of equipment and in the oil supply system operating instructions provided in the complete gear unit documentation.

Oil supply system with flange pump

The oil supply system is mounted on the gear unit and comprises the following components:

- Flange pump
- Double change-over filter
- Pressure monitor
- Piping

The diagram below shows the gear unit equipment on gear units of type H..V with mounted oil supply system:

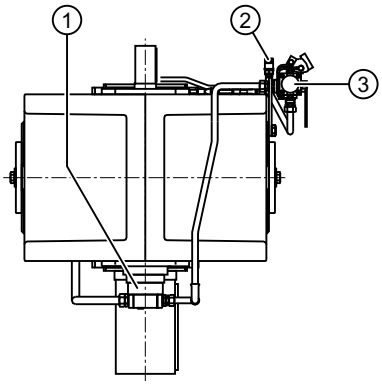

① Flange pump
② Pressure monitor
③ Double change-over filter

Figure 3-12 Mounted oil supply system with flange pump for types H..V:

The diagram below shows a mounted oil supply system with flange pump for types B..V:

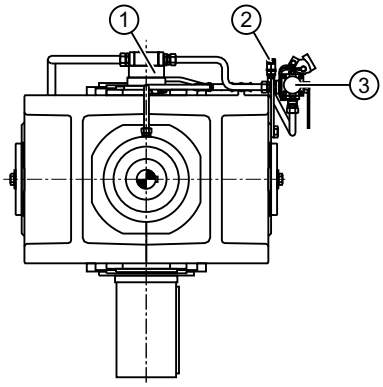

① Flange pump
② Pressure monitor
③ Double change-over filter

Figure 3-13 Mounted oil supply system with flange pump for types B..V:

Further information

Further information, a detailed illustration of the gear unit and the position of the mounted components can be found in the dimension drawing in the complete documentation for the gear unit.

Oil supply system with motor pump

The oil supply system is mounted on the gear unit and comprises the following components:

- Motor pump
- Double change-over filter
- Pressure monitor
- Piping

The diagram below shows a mounted oil supply system with motor pump for types H..V:

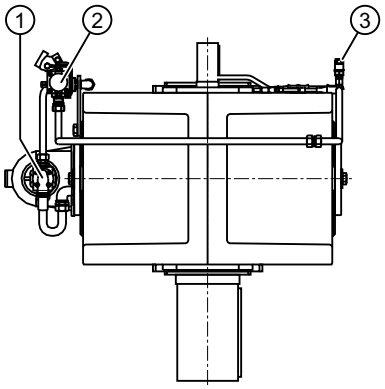

① Motor pump
② Double change-over filter
③ Pressure monitor

Figure 3-14 Mounted oil supply system with motor pump for types H..V:

The diagram below shows a mounted oil supply system with motor pump for types B..V:

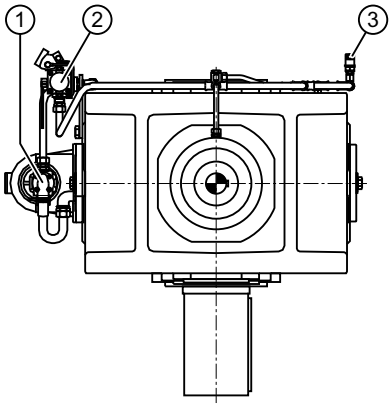

① Motor pump
② Double change-over filter
③ Pressure monitor

Figure 3-15 Mounted oil supply system with motor pump for types B..V:

Further information

Further information, a detailed illustration of the gear unit and the position of the mounted components can be found in the dimension drawing in the complete documentation for the gear unit.

3.5 Bearing arrangement of the shafts

All shafts are mounted on rolling-contact bearings.

3.6 Shaft seal

Introduction

Depending on requirements, shaft seals prevent oil from escaping from the gear unit or dirt from entering the gear unit.

3.6.1 Rotary shaft sealing rings

Rotary shaft sealing rings are the standard seal used. Wherever possible, rotary shaft sealing rings are equipped with an additional dust lip which protects the actual sealing lip against external contaminants.

NOTICE
Irreparable damage to the rotary shaft sealing ring caused by high concentration of dust
A damaged rotary shaft sealing ring might not be able to effectively seal the gear unit.
In very dusty atmospheres, do not use rotary shaft sealing rings unless they have additional protection.

For specific mounting positions, the rotary shaft sealing ring is used together with a grease packing in conjunction with a ring.

For high dust concentrations, in compliance with the ATEX Directive, use is only permitted in conjunction with a Taconite seal (Page 37).

The diagram below shows a rotary shaft sealing ring

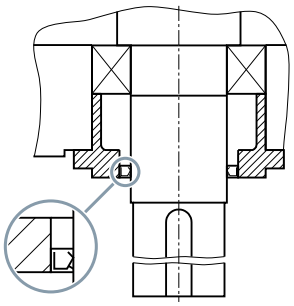

Figure 3-16 Rotary shaft sealing ring

3.6.2 Dry running protection

A grease filling and a ring are provided above the shaft sealing ring in order to reliably prevent the rotary shaft sealing ring, located at the top, from running dry.

In a case such as this, a shaft sealing ring without additional dust lip is used. The ring is fitted on the input shaft using a set screw, and prevents grease from escaping upwards. During operation, the ring rotates contactlessly in the housing cover.

The diagram below shows dry running protection:

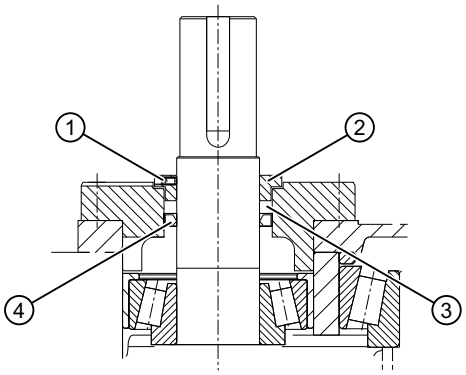

① Set screw
② Ring
③ Grease filling
④ Rotary shaft sealing ring

Figure 3-17 Dry running protection

3.6.3 Taconite seal

The taconite seal is a combination of two sealing elements:

- Rotary shaft sealing ring to prevent the escape of lubricating oil
- Grease-filled dust seal (comprising a labyrinth and a lamellar seal) to allow operation of the gear unit in extremely dusty environments

The taconite seal is ideal for use in dusty environments.

NOTICE
Gear unit leaks caused by poor sealing Regrease the labyrinth seals at the specified regreasing intervals. The regreasing intervals are specified in the Maintenance schedule (Page 128).

A taconite seal is illustrated in the diagram below:

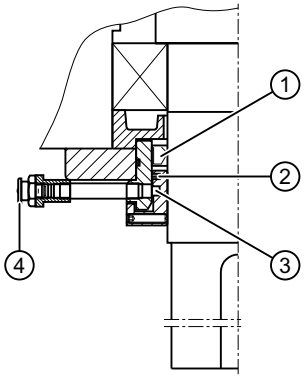

① Rotary shaft sealing ring
② Lamellar seal
③ Labyrinth, filled with grease, can be regreased
④ Grease nipple

Figure 3-18 Taconite seal

The following design variants of taconite seal are available:

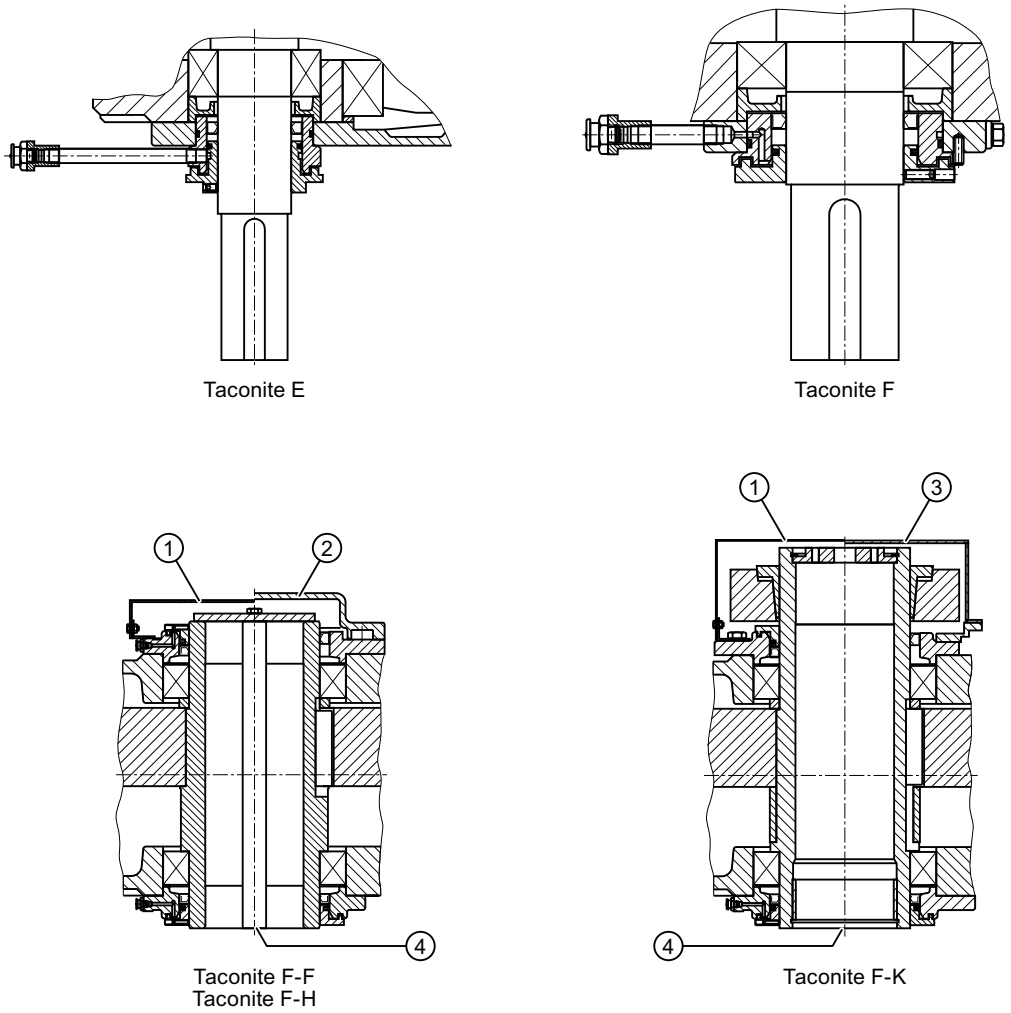

① Taconite F-F
② Taconite F-H
③ Taconite F-K
④ Output

Figure 3-19 Design variants of taconite seals

The various taconite seals are described in the following table:

Table 3-2 Taconite seal versions

Taconite seal versions	Application	Remarks
"E"	All input shafts with or without fan	• Regreasable labyrinth
"F"	Output shaft Design S: (solid shaft) Design F: (flange shaft)	
"F-F"	Output shaft Design H: (hollow shaft with parallel keyway) Design K: (hollow shaft with spline according to DIN 5480)	• Labyrinth which can be regreased on both sides, including cover to protect against accidental contact at the gear unit end facing away from the output shaft

Taconite seal versions	Application	Remarks
"F-H"	Output shaft Design H: (hollow shaft with parallel keyway) Design K: (hollow shaft with spline according to DIN 5480)	• Regreasable labyrinth on the output side, dust-proof protection cover on the opposite side
"F-K"	Output shaft Design D: (hollow shaft for shrink disk)	



⚠ DANGER

An explosive atmosphere can be ignited

Sparking or inadmissible temperature rise due to insufficient gap dimension might result in the ignition of an explosive atmosphere.

In the case of a shaft seal with taconite seals, ensure that the set gap dimension of $1^{+0.5}$ mm on the grease labyrinth is not changed when the input and output elements (e.g. coupling parts) are mounted. Rotating and stationary parts must not touch.

3.6.4 Centrifugal disk

A centrifugal disk on the output shaft prevents water from penetrating into the gear unit.

The following diagram shows a centrifugal disk:

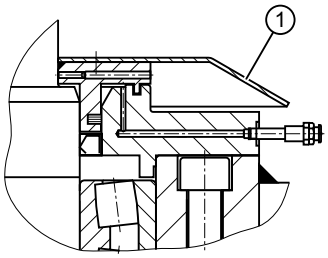

① Centrifugal disk

Figure 3-20 Centrifugal disk

3.6.5 Oil retaining pipe

By sealing the output shaft pointing vertically downward with a contactless and wear-free shaft seal (oil retaining pipe) the shaft outlet is completely oil tight. This design is used only for pressure lubrication.

The following diagram shows an oil retaining pipe

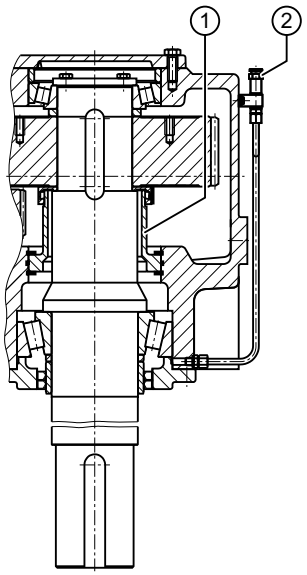

① Oil retaining pipe ② Lubrication point

Figure 3-21 Oil retaining pipe

The lower rolling-contact bearing of the output shaft is separated from the inside of the gear unit by the oil retaining pipe and is grease lubricated. A rotary shaft sealing ring is used to prevent grease from escaping.

NOTICE
Damage to the lower bearing is possible as a result of inadequate lubrication
Make sure that the lower rolling-contact bearing is regreased at the specified intervals. The regreasing intervals are specified in the Maintenance schedule (Page 127).

3.7 Cooling

Introduction

The gear unit can be equipped with the following cooling equipment depending on requirements:

- Fan
- Cooling coil
- Mounted oil supply system with air-oil cooler
- Mounted oil supply system with water-oil cooler
- Separate oil supply system

When installing the gear unit, make sure that unhindered convection across the housing surface is possible in order to protect the gear unit against overheating.

3.7.1 Fan

Principle of operation

Generally, the fan is mounted on the high-speed shaft of the gear unit and is protected from accidental contact using an air guide cover. The fan draws in air through the protective grille of the air guide cover and blows it along the lateral air ducts on the gear unit housing. The fan dissipates a certain amount of heat from the housing.

Improper use can damage the gear unit. Follow the instructions given below in order to protect the gear unit against overheating:

- When you install the protective device for the coupling or similar on gear units that are equipped with a fan, make sure that you leave sufficient clearance for cooling air to be drawn into the fan.
  The required clearance is specified in the dimension drawing in the complete documentation for the gear unit.
- Make sure that the air guide cover is correctly fastened.
- Protect the air guide cover against damage by external components.
- Make sure that there is no contact between the fan and the air guide cover.
- Note that the cooling effect can be significantly impaired if the fan is dirty or if the surface of the housing is covered with dust or contaminants that act as an insulating layer.
  Clean the fan and the gear unit. Observe the cleaning information in chapter Maintenance and servicing work (Page 129).

The diagram below shows a gear unit fan:

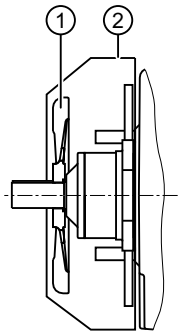

① Fan ② Air guide cover

Figure 3-22 Gear unit fan

Further information

Further information and a detailed illustration of the gear unit and the position of the mounted components can be found in the dimension drawings in the complete documentation for the gear unit.

3.7.2 Cooling coil

Introduction

The gear unit can be equipped with a cooling coil in the oil sump. The cooling coil is connected to a cooling water supply. The cooling water connection must be provided by the operator. The cooling water can be fresh water, sea water or brackish water.

Principle of operation

Heat from the gear unit oil is transferred to the cooling water as it flows through the cooling coil.

Note

To prevent the formation of condensation, make sure that the cooling coil is fully immersed in the oil.

Improper use can damage the cooling coil. Be sure to take the following precautions:

- Make sure that the cooling water pressure does not exceed 8 bar.
  The direction of water flow through the gear unit is optional.
- Make sure that the ends of the cooling coil are not twisted and that the reducer screws are not removed.
- If there is a risk of freezing temperatures, drain the cooling water out of the coil and blow the coil out with compressed air to remove any water residue.
- Use a suitable cooling water flow regulator (e.g. a pressure reducing valve or an appropriate isolation valve) in order to prevent excessive water pressure at the cooling water inlet.

⚠ WARNING

Risk of eye injury from compressed air

Water residue and dirt particles can cause damage to eyes.

Wear suitable safety goggles.

The diagram below shows the cooling coil connections:

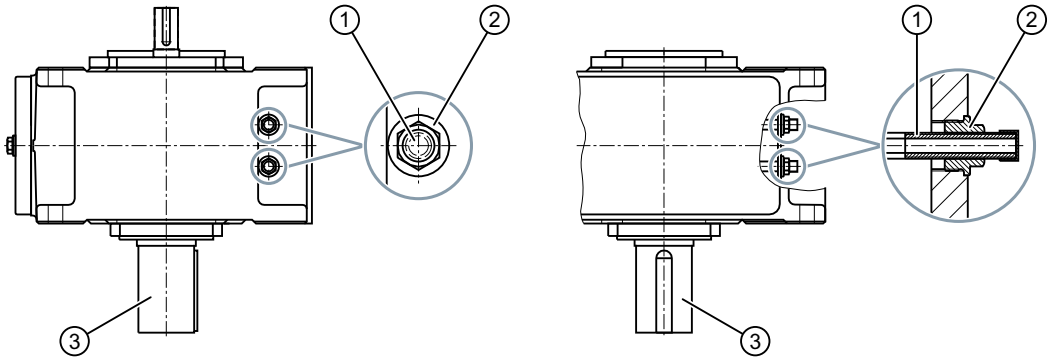

① Cooling water connection
② Reducer screw
③ Output shaft

Figure 3-23 Cooling coil connections

Further information

For further information and a detailed illustration of the gear unit and the connection dimensions, please refer to the dimension drawings in the complete gear unit documentation.

The required cooling water flow rate and the maximum permissible inlet temperature can be found in the separate data sheet, the list of equipment or the dimension drawing in the complete documentation for the gear unit.

3.7.3 Mounted oil supply system

3.7.3.1 Mounted oil supply system with air-oil cooler

Introduction

Depending on the order specification, an oil supply system with air-oil cooler can be used. This oil cooling system is mounted on the gear unit.

Principle of operation

The air-oil cooler is used to cool the gear unit oil; the ambient air is used as coolant. The oil is fed through the cooler in one or several channels, depending on the volume flow, while passing by the ambient air blown through the cooler by the fan. For cold starts, a bypass pipe with a temperature-controlled valve is provided.

A mounted oil supply system with air-oil cooler can include the following components:

- Air-oil cooler
- Flange pump

- Oil filter (double change-over filter or coarse filter)
- Pressure monitor
- Temperature control valve
- Piping

Note

Observe the flow direction of the pump

When connecting the valves, observe the flow direction of the pump.

Refer to the pump operating instructions in the complete gear unit documentation to ascertain whether the flow direction of the pump used depends on the direction of rotation.

Improper use can damage the gear unit. Follow the instructions given below in order to protect the gear unit against overheating:

- When installing a gear unit with mounted air-oil cooler, carefully ensure that air can freely circulate.
  The necessary minimum clearance to adjacent components such as walls and panels is specified in the dimension drawing in the complete gear unit documentation.
- Please note that the cooling effect is considerably reduced as a result of a dirty air-oil cooler or the insulating effect of dirt or pollution on the housing surface.
  Clean the air-oil cooler and the gear unit. Cleaning information is provided in chapter Cleaning the fan and gear unit (Page 132).

The function is monitored using temperature monitoring in the oil sump or pressure monitoring.

The diagram below shows an oil supply system with air-oil cooler mounted on gear unit, types B..V:

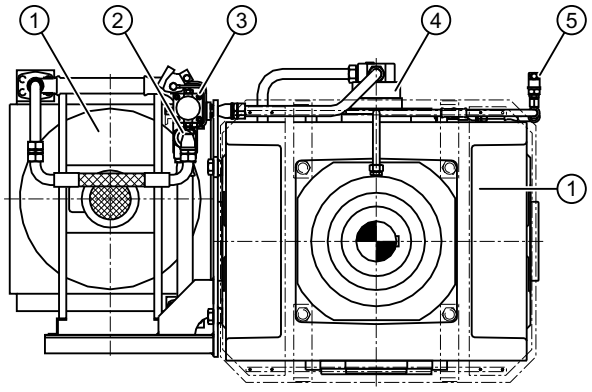

① Air-oil cooler
② Temperature control valve
③ Double change-over filter
④ Flange pump
⑤ Pressure monitor

Figure 3-24 Oil supply system with air-oil cooler mounted on gear unit, type B..V

The diagram below shows an oil supply system mounted on gear unit, types H..V:

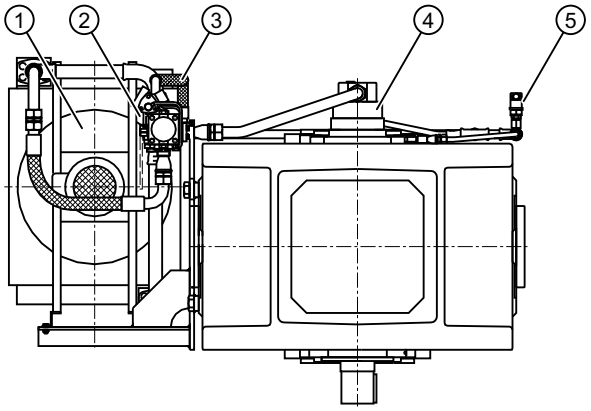

① Air-oil cooler
② Temperature control valve
③ Double change-over filter
④ Flange pump
⑤ Pressure monitor

Figure 3-25 Oil supply system mounted on gear unit, types H..V:

Further information

Additional information such as connection dimensions and a detailed illustrated description of the gear unit and the oil supply system with air-oil cooler can be found in the dimension drawing in the complete gear unit documentation.

Additional information about the oil supply system and control notes can be found in the separate data sheet, in the list of equipment and in the oil supply system operating instructions provided in the complete gear unit documentation.

Temperature control valve

A temperature control valve is installed in the air-oil cooler bypass.

Principle of operation

At a preset temperature, the temperature control valve starts to open and some oil flows through the oil cooler; when a second preset temperature is reached, then all of the oil flows through the oil cooler.

Further information

You can find additional information on the temperature control valve in the temperature control valve operating instructions provided in the complete gear unit documentation.

You can find additional technical data in the separate data sheet and in the list of equipment provided in the complete gear unit documentation.

3.7.3.2 Mounted oil supply system with water-oil cooler

Introduction

Depending on the order specification, an oil supply system with water-oil cooler can be used. This oil cooling system is mounted on the gear unit.

Principle of operation

The water-oil cooler is used to cool the gear unit oil; water is used as coolant.

For certain applications, a motor pump can be used instead of a flange pump.

A mounted oil supply system with water-oil cooler can include the following components:

- Water-oil cooler
- Flange pump
- Oil filter (double change-over filter)
- Pressure monitor
- Piping

The operating company must establish the cooling water connection required.

Note

Observe the flow direction of the pump

When connecting the valves, observe the flow direction of the pump.

Refer to the pump operating instructions in the complete gear unit documentation to ascertain whether the flow direction of the pump used depends on the direction of rotation.

Improper use can damage the gear unit. Be sure to take the following precautions:

- Ensure that the cooling water pressure is a maximum of 8 bar.
- Maintain the specified flow direction of the water-oil cooler so that an optimum cooling power is achieved. Do not interchange the cooling water intake and outlet.
- If there is a risk of freezing temperatures, drain the cooling water out of the coil and blow the coil out with compressed air to remove any water residue.

⚠ WARNING

Risk of eye injury from compressed air

Water residue and dirt particles can cause damage to eyes.

Wear suitable safety goggles.

The function is monitored using temperature monitoring in the oil sump or pressure monitoring.

The diagram below shows an oil supply system with water-oil cooler mounted on gear units, types H..V:

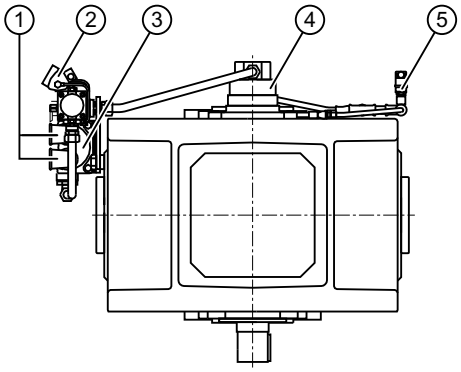

① Cooling water intake and outlet
② Double change-over filter
③ Water-oil cooler
④ Flange pump
⑤ Pressure monitor

Figure 3-26 Oil supply system with water-oil cooler mounted on gear units, types H..V

The diagram below shows an oil supply system with water-oil cooler mounted on gear units, types B..V:

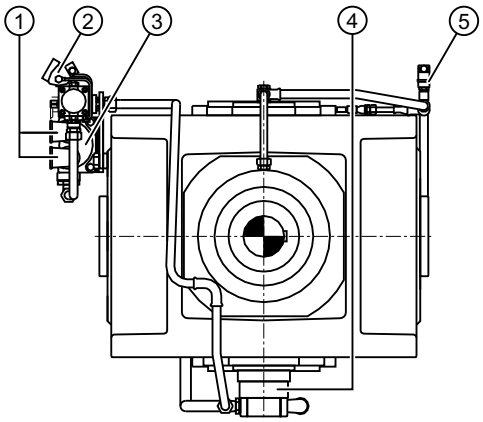

① Cooling water intake and outlet
② Double change-over filter
③ Water-oil cooler
④ Flange pump
⑤ Pressure monitor

Figure 3-27 Oil supply system with water-oil cooler mounted on gear units, types B..V

Further information

Additional information such as connection dimensions and a detailed illustrated description of the gear unit and the oil supply system with water-oil cooler can be found in the dimension drawing in the complete gear unit documentation.

Additional information about the oil supply system, control notes, the required cooling water quantity and the maximum permissible water intake temperature can be found in the separate data sheet, in the list of equipment and in the oil supply system operating instructions provided in the complete gear unit documentation.

3.7.3.3 Pump

Requirements placed on the medium being pumped

The pump being used is suitable for pumping lubricating oil. It is not permissible that the oil contains abrasive components and must not chemically attack the materials used in the pump. Clean oil with good lubricating properties is a precondition for ensuring the correct function, high operational reliability and long service life of the pump.

3.7.3.4 Oil filter

Introduction

The oil filter protects downstream units, measuring and control devices against dirt and pollution.

Principle of operation

The oil filter comprises a housing with connections and a filter cartridge. The medium flows through the filter housing, where, depending on the filter gauge, most of the dirt particles larger than a defined size in the oil are filtered out. Dirty filter cartridges must be cleaned or replaced.

3.7.3.5 Pressure monitor

The pressure of the mounted oil supply system is monitored using a pressure monitor.

Further information

You can find additional information on the pressure monitor in the pressure monitor operating instructions provided in the complete gear unit documentation.

You can find additional technical data in the separate data sheet and in the list of equipment provided in the complete gear unit documentation.

3.7.4 Separate oil supply system

A separate oil supply system can be used for cooling the oil.

Note

Oil supply system according to the ATEX Directive

The oil supply system must be designed and manufactured in compliance with the ATEX Directive.

Further information

Further information about separate oil supply systems can be found in the oil supply system operating instructions in the complete documentation for the gear unit.

You can find additional information about the components of the oil supply system in the operating instructions for the components in the complete gear unit documentation.

You can find additional technical data in the separate data sheet and in the equipment list in the complete gear unit documentation.

3.8 Couplings

Flexible couplings or safety couplings are generally used at the input end of the gear unit.

Use of rigid couplings or other input or output elements that generate additional radial or axial forces (e.g. gear wheels, belt pulleys, flywheels or hydraulic couplings) must be agreed contractually.

Further information

You can find additional information about the couplings in the coupling operating instructions provided in the complete gear unit documentation.

3.9 Shrink disk

A shrink disk is provided as a frictional clamping connection between the gear unit hollow shaft and the driven machine on shaft-mounted gear units.

The shrink disk allows an interference fit to be created between a hollow shaft and a stub shaft (machine shaft), referred to hereafter as "stub shaft". The interference fit is capable of transferring torques, bending moments and forces. Crucial to the successful transmission of torques and/or power is the joint pressure between the hollow and stub shafts generated by the shrink disk.

Further information

Further information about the shrink disk can be found in the shrink disk operating instructions. These are included in the complete documentation for the gear unit.

3.10 Heating

Introduction

At low ambient temperatures it may be necessary to preheat the gear unit oil before switching on the drive or while it is in operation.

Heating is only permissible in conjunction with oil-level monitoring system.

Heating elements

Heating elements can be used for these applications, for example. Heating elements convert electricity into heat and transfer this to the oil in which they are immersed. The heating elements are installed in protective tubes in the housing so that they can be replaced without draining off the oil first.

Complete immersion of the heating elements in the oil bath must be ensured by adhering to the installation position in accordance with the dimension drawings in the complete documentation and the oil level.



⚠ WARNING

Explosion and fire hazard

Exposed heating elements pose a fire hazard.

Do not switch on the heating elements unless you have checked that they are completely immersed in the oil bath.

If heating elements are retrofitted, the heat output at the outer surface of the heating element must not exceed the maximum values stated in the table below.

The following table contains information about the specific heat output P_{HO} as a function of ambient temperature:

Table 3-3 Information about the specific heat output

P_{HO} in W/cm²	**Ambient temperature in °C**
0.9	10 to 0
0.8	0 to -25
0.7	-25 to -50

The diagram below shows heating for gear units with oil expansion unit:

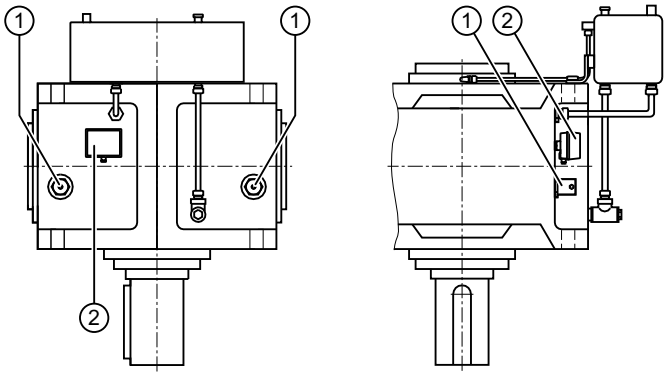

① Heating element ② Temperature monitor

Figure 3-28 Heating for gear units with oil expansion unit, types H..V and B..V

The diagram below shows heating for gear units with oil expansion unit:

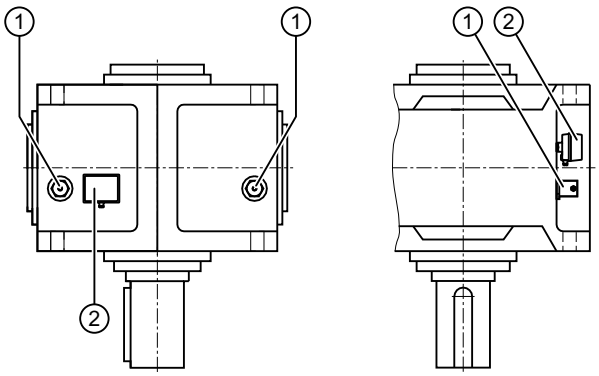

① Heating element ② Temperature monitor

Figure 3-29 Heating for gear units without oil expansion unit, types H..V and B..V

Heating element control

Heating elements can be controlled by a temperature monitor. The temperature monitor provides a signal to be amplified when the minimum and maximum temperatures are reached.

Further information

Further information about the position of the mounted components and a detailed illustration of the gear unit can be found in the dimension drawing in the complete documentation for the gear unit.

Further information about heating elements can be found in the separate data sheet, in the list of equipment and in the heating element operating instructions in the complete documentation for the gear unit.

Further information about the temperature monitor (such as control instructions) can be found in the temperature monitor operating instructions in the complete documentation for the gear unit.

3.10.1 Oil-level monitoring system for the heating elements

Introduction

Depending on the order specification, the gear unit can be equipped with an oil-level monitoring system (Page 54). Heating is only permissible in conjunction with oil-level monitoring system.

This monitoring checks the minimum oil level of the gear unit for immersing the heating elements.

Principle of operation

The "Oil level too low" signal should be connected up so that the heating elements are switched off.

This guarantees that the heating elements are only operated if they are completely immersed in the oil.



⚠ DANGER

Explosion and fire hazard

Exposed heating elements pose an explosion or fire hazard as they can ignite an explosive atmosphere.

Do not switch on the heating elements unless you have checked that they are completely immersed in the oil bath.

If heating elements are retrofitted, the heat output at the outer surface of the heating element must not exceed the maximum values.

3.11 Oil level indicator

The following components for visual monitoring of the oil level can be mounted on the gear unit:

- Oil sight glass
- Oil level indicator
- Oil dipstick

Check the oil level when the gear unit is stationary and with the oil in a cool state.

Further information

Further information about the oil level indicator and checking the oil can be found in the operating instructions BA 7300 in the complete documentation for the gear unit.

Further information, a detailed illustration of the gear unit and the position of the mounted components can be found in the dimension drawing in the complete documentation for the gear unit.

3.12 Oil level monitoring system

Introduction

Depending on the order specification, the gear unit can be equipped with an oil-level monitoring system using a filling-level limit switch.

The oil-level monitoring system has been designed to check the oil level when the gear unit is at a standstill before it starts.

Mounting position

When using an oil-level monitoring system it is especially important to ensure that the gear unit is in a horizontal mounting position.

Further information

Further information, a detailed illustration of the gear unit and the position of the mounted components can be found in the dimension drawing in the complete documentation for the gear unit.

Further information about oil level monitoring, control instructions and the technical data can be found in the operating instructions for the oil level monitor, in the list of equipment and in the separate data sheet in the complete documentation for the gear unit.

3.13 Oil temperature monitoring

Depending on the order specification, the gear unit can be fitted with a Pt 100 resistance thermometer for measuring the oil temperature in the oil sump.

To measure temperatures or temperature differences, connect the Pt 100 resistance thermometer to an evaluation unit (to be supplied by the customer). The resistance thermometer is fitted with a connector head for the wiring. A two-wire circuit is provided from the factory, but the customer can also install a three- or four-wire circuit.

For gear units belonging to equipment Category 2, an oil temperature monitoring system **must** be mounted on the gear unit.

For gear units belonging to equipment Category 3, an oil temperature monitoring system **can** be mounted on the gear unit.

The following diagram shows an oil temperature monitor mounted on the gear unit:

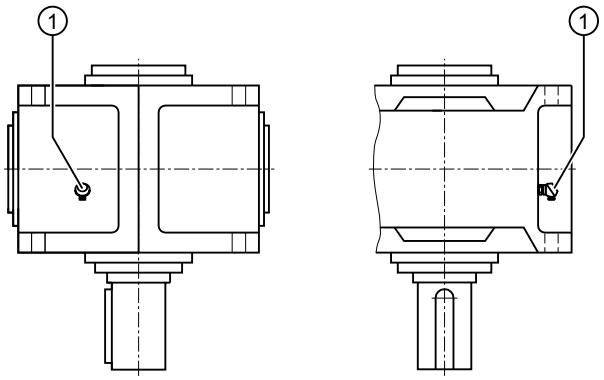

① Pt 100 resistance thermometer

Figure 3-30 Oil temperature monitoring

Further information

Further information, a detailed illustration of the gear unit and the position of the mounted components can be found in the dimension drawing in the complete documentation for the gear unit.

Further information about oil temperature monitoring (such as control instructions) and the technical data can be found in the operating instructions for the oil temperature monitor and in the list of equipment in the complete documentation for the gear unit.

3.14 Bearing monitoring

3.14.1 Bearing monitoring using a Pt 100 resistance thermometer

Depending on the order specification, the gear unit can be equipped with Pt 100 resistance thermometers to monitor the bearings.

You must connect the Pt 100 resistance thermometer to an evaluation unit provided by the customer to be able to measure temperatures or temperature differences. The resistance thermometer has a connection head for the wiring. A two-wire circuit is provided in the factory. However, customers can also configure a three or four-wire circuit.

For gear units belonging to equipment Category 2, bearing monitoring using a Pt 100 resistance thermometer **must** be mounted on the gear unit.

For gear units belonging to equipment Category 3, bearing monitoring using a Pt 100 resistance thermometer **can** be mounted on the gear unit.

The following diagram shows bearing monitoring using a Pt 100 resistance thermometer at gear units, type H2.V:

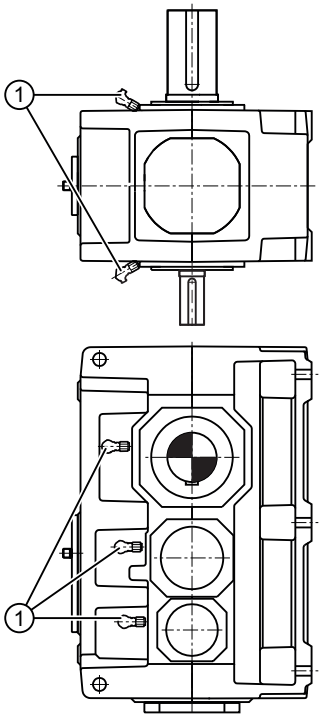

① Pt 100 resistance thermometer

Figure 3-31 Bearing monitoring using a Pt 100 resistance thermometer at gear units, type H2.V:

The following diagram shows bearing monitoring using a Pt 100 resistance thermometer at gear units, type B3.V:

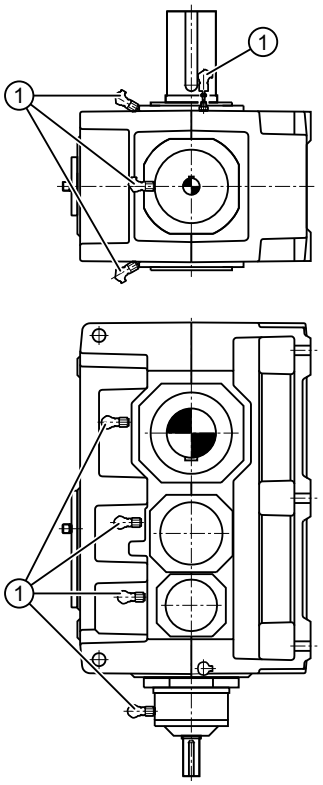

① Pt 100 resistance thermometer

Figure 3-32 Bearing monitoring using a Pt 100 resistance thermometer at gear units, type B3.V:

Further information

Further information, a detailed illustration of the gear unit and the position of the mounted components can be found in the dimension drawing in the complete documentation for the gear unit.

Further information about bearing monitoring using a Pt 100 resistance thermometer (such as control instructions) and the technical data can be found in the operating instructions for the Pt 100 resistance thermometer and in the list of equipment in the complete documentation for the gear unit.

3.14.2 Bearing monitoring by shock-pulse transducer

Depending on the order specification, the gear unit can be equipped with measuring nipples for monitoring the bearings.

These measuring nipples are used to attach shock-pulse transducers through a fast-release coupling; they are located on the housing close to the bearings to be monitored.

The following diagram shows a bearing monitoring system that uses shock-pulse transducers at gear units, type H2.V:

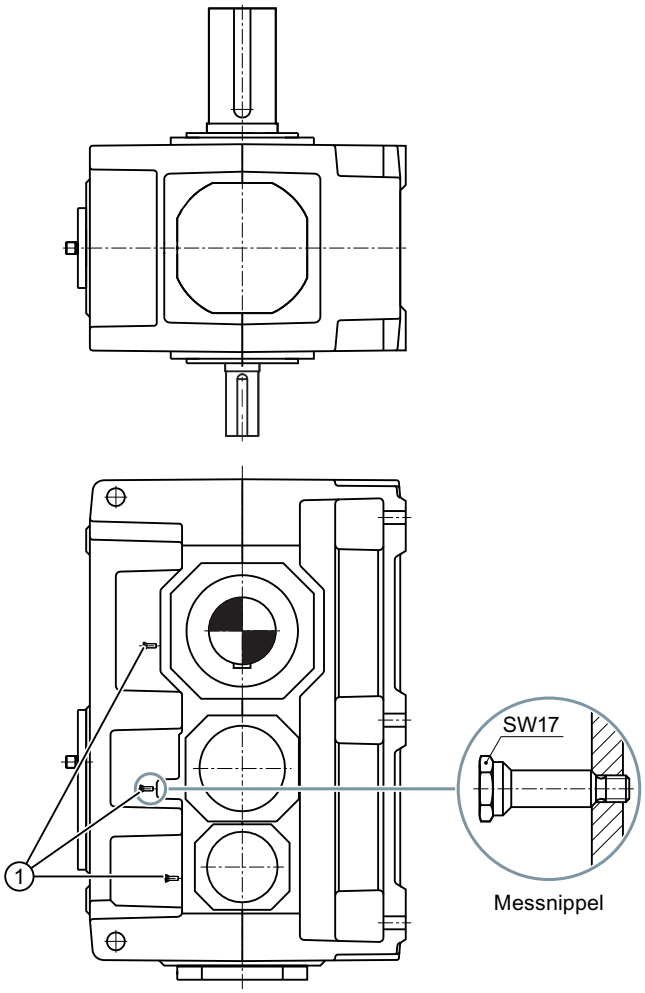

① Shock-pulse transducer

Figure 3-33 Bearing monitoring using shock-pulse transducers at gear units, type H2.V:

The following diagram shows a bearing monitoring system using shock-pulse transducers at gear units, type B3.V:

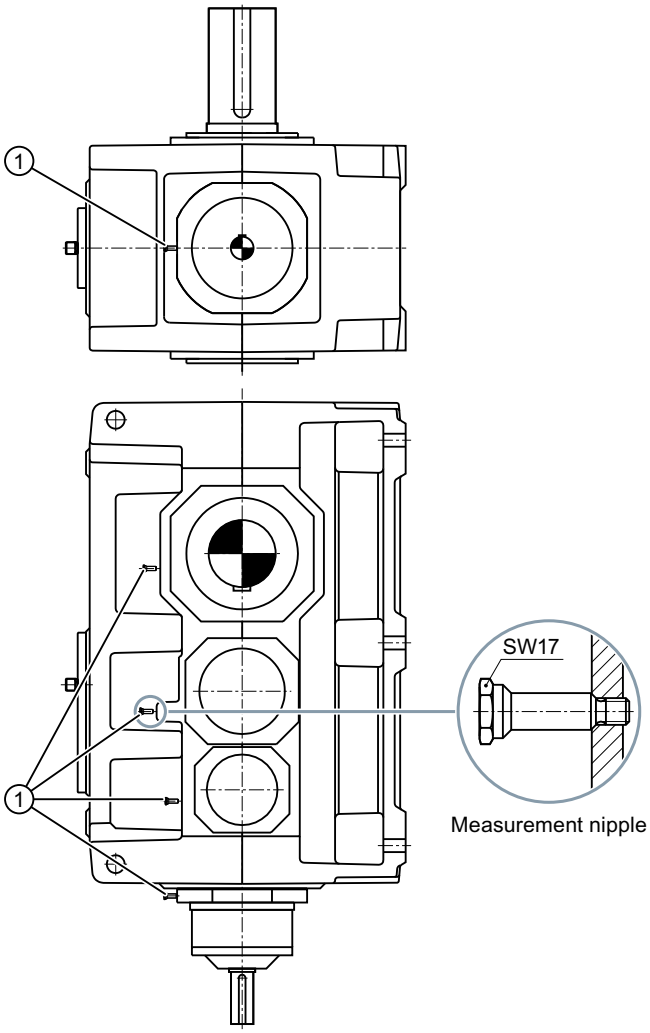

① Shock-pulse transducer

Figure 3-34 Bearing monitoring using shock-pulse transducers at gear units, type B3.V:

Further information

Further information, a detailed illustration of the gear unit and the position of the mounted components can be found in the dimension drawing in the complete documentation for the gear unit.

3.14.3 Bearing monitoring by acceleration sensor

Depending on the order specification, the gear unit can be supplied with threaded holes in which acceleration sensors can be inserted. These threaded holes have an M6 or M8 thread depending on the variant.

The following diagram shows the fully assembled acceleration sensor (A), and the threaded connector (B) for variants 1 to 4:

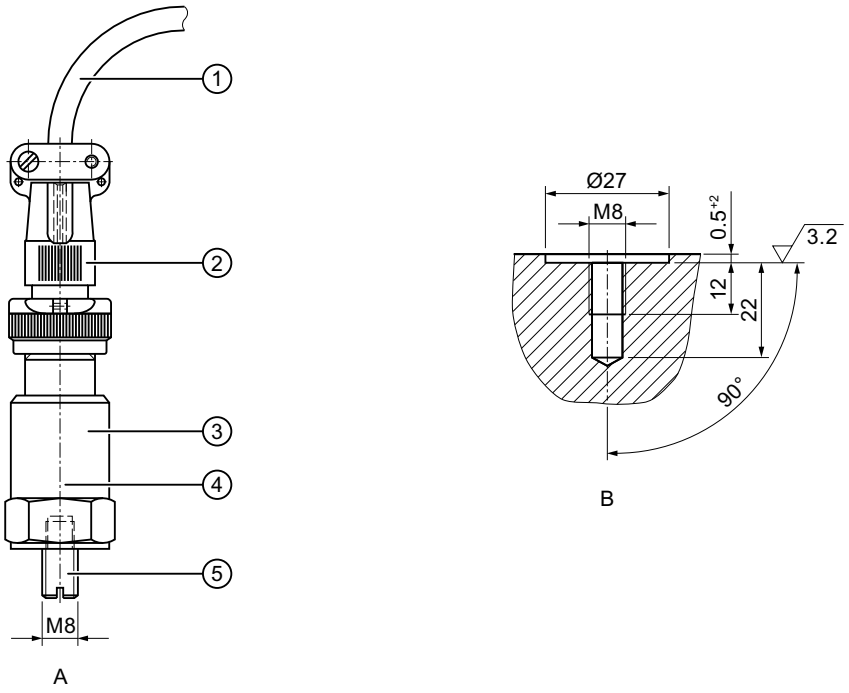

① Shielded cable (oil-proof)
② MIL-spec connector
③ Acceleration sensor
④ Sensitivity specification
⑤ Set screw

Figure 3-35 Fully assembled acceleration sensor (A), and threaded connector (B) for variants 1 to 4

The following diagram shows the fully assembled acceleration sensor (C), and the threaded connector (D) for variants 5A and 5B:

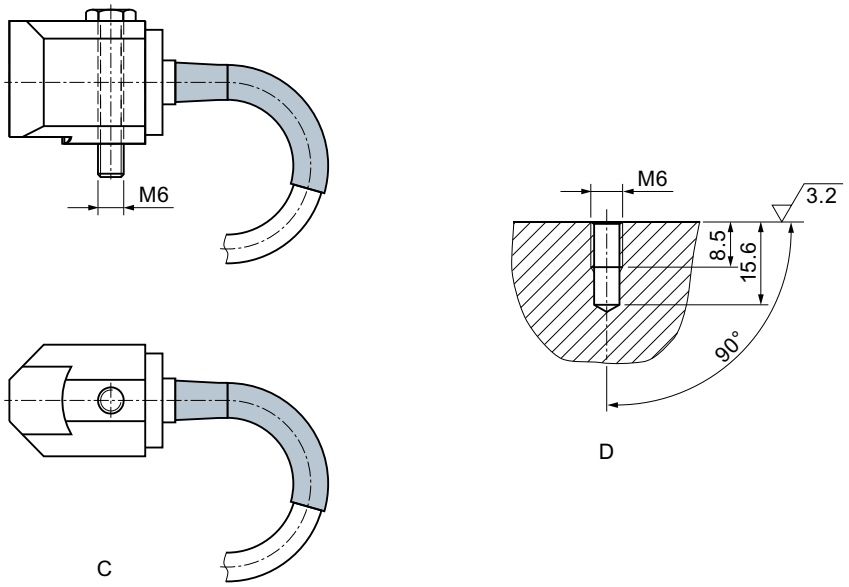

Figure 3-36 Fully assembled acceleration sensor (C), and the threaded connector (D) for variants 5A and 5B

Further information

Further information and a detailed illustration of the gear unit with attached sensors can be found in the dimension drawing in the complete documentation for the gear unit.

Further information about the sensors can be found in the operating instructions for the sensors.

3.15 Speed encoder

Depending on the order specification, an incremental speed encoder can be fitted.

Customers must establish the wiring and provide the evaluation unit required.

The following diagram shows a speed encoder:

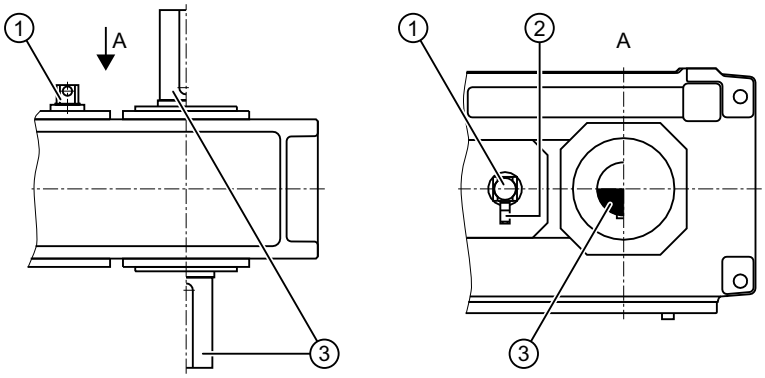

① Incremental speed encoder
② 12-pole brass connector
③ Output

Figure 3-37 Speed encoder

Further information

Further information, a detailed illustration of the gear unit and the position of the mounted components can be found in the dimension drawing in the complete documentation for the gear unit.

You can find further information about the speed encoder (such as control instructions) and technical data, in the speed encoder operating instructions and in the equipment list provided in the complete gear unit documentation.

Application planning

4

4.1 Scope of delivery

The scope of delivery is listed in the shipping documents. Immediately upon receiving the gearbox, check that everything has been delivered. Report any damaged and/or missing parts to Customer Services (Page 141) immediately.

⚠ WARNING
Serious injury through defective product
Serious injury may occur.
If the gearbox exhibits any visible damage, you should not put it into operation.

4.2 Transport

General information

The gear unit is delivered fully assembled. Additional items such as shrink disks, couplings, oil coolers, pipework and valves may be delivered separately packaged, as necessary.

When transporting the gear unit, observe the following instructions to avoid damaging the gear unit:

- Always use suitable equipment to transport the gear unit.
- Transport the gear unit without oil filling and leave it in the transport packaging.
- Do not use incorrect attachment points.
  The threads in the end faces of the shaft ends may not be used for attaching lifting equipment.
- Do not use the pipework to move the gear unit.
- Ensure that the lifting equipment is adequately designed to accommodate the weight of the gear unit.



⚠ WARNING

Risk of crushing

There is a risk of being crushed by a component that becomes detached because the hoisting gear and load suspension device are not suitable for handling it.

When lifting, please observe the load distribution information on the packaging.

When the product is in a raised position, transport it slowly and carefully to avoid injury to persons or damage to the gear unit.

- When transporting the gear unit ensure that it is not damaged.

NOTICE

Damage to the gear unit

When transporting the gear unit, the packing and/or the gear unit paint coating can be damaged.

When the product is in a raised position, transport it slowly and carefully to avoid damaging the packing and/or the paint coating.

NOTICE

Damage to the gear unit caused by shock applied to the free shaft ends

The gear unit can be damaged due to shock applied to the free shaft ends.

When the product is in a raised position, transport it slowly and carefully to avoid injury to persons or damage to the gear unit.

Avoid that the free shaft ends are subject to any shock or load.

Attaching the gear unit

To transport the gear unit, only attach slings to the marked attachment points that are provided for this purpose.

Please observe the following when attaching slings to the load or raising, lowering or moving it:

- Do not exceed the specified load limits
- If you are using a load suspension device with several load hooks, make sure that the load is evenly distributed between them
- Note the eccentric centre of gravity
- Make sure that the lifting equipment is securely attached
- Keep your speed down when moving the load
- Do not allow the load to sway and do not attach the load to objects or structures inside the building

- Loads must not be suspended from the tip of a load hook
- Always place the products down on a level, non-slip and stable base



⚠ DANGER

Falling load

There is a risk of fatal injury from falling loads if these have not been securely attached to the lifting equipment.

Never stand or sit under suspended loads. Do not exceed the load limits of the lifting equipment.

Packaging

The gear unit is delivered fully assembled. Additional equipment is also delivered separately packaged, as necessary.

The gear unit may be packed in various forms, depending on the size of the unit and method of transport.

Please adhere to the symbols applied on the packaging.

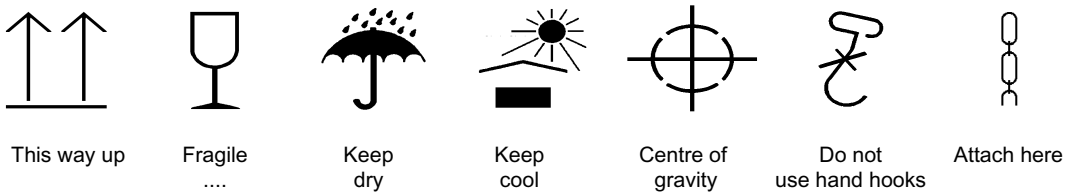

Figure 4-1 Transport symbols

4.3 Attachment points

Lifting eyes

Lifting eyes are fitted to the gear unit to assist with its transportation during manufacture and installation.

Carefully ensure that the angle of the vertical load at the gear units lifting eyes does not exceed 45°.

Sling swivel

Threads for screwing in transport lugs are provided on the gear unit to assist with its transportation during manufacture and installation.

The shear pulling must not exceed 45° when the lifting equipment is attached to sling swivels.

Note

Damage to the gear unit during transport

Using the wrong attachment points can cause damage when transporting large gear units.

Always use sling swivels for gear units larger than size 23.

Eye bolts

The use of sling swivels instead of eye bolts is generally recommended.

When using eye bolts, please note that their load-bearing capacity may be reduced if they are alternately attached to different components that require moving.

It is not permitted to load eye bolts through lateral pulling contrary to the direction of the eye plane.

The following figure shows the permissible shear and lateral pulling when using eye bolts:

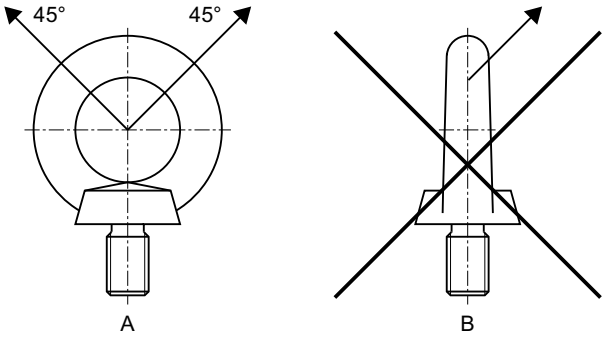

A Permitted shear pulling in direction of eye plane (maximum angle of 45°)

B Non-permitted lateral pulling contrary to direction of eye plane

Figure 4-2 Shear and lateral pulling when using eye bolts

Position of attachment points

The following diagram shows the position of the attachment points for gear units, type H..V and B..V:

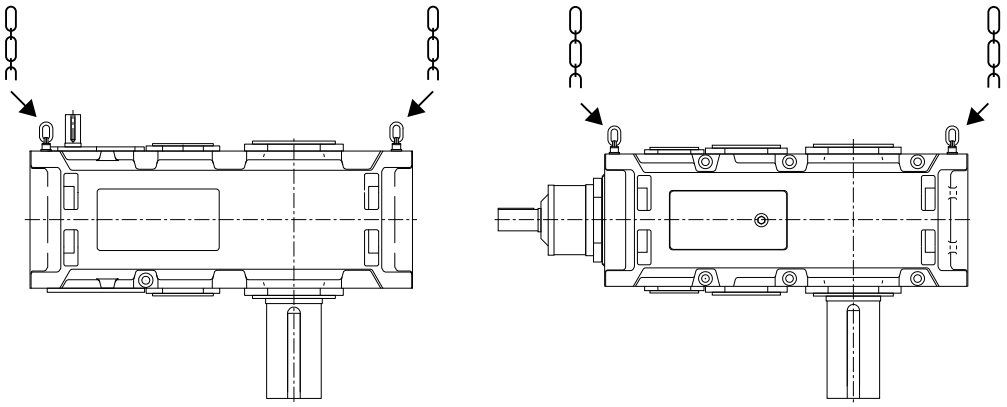

Figure 4-3 Position of the attachment points for gear units, type H..V and B..V

The following diagram shows the position of the attachment points for gear units, type H..V with motor:

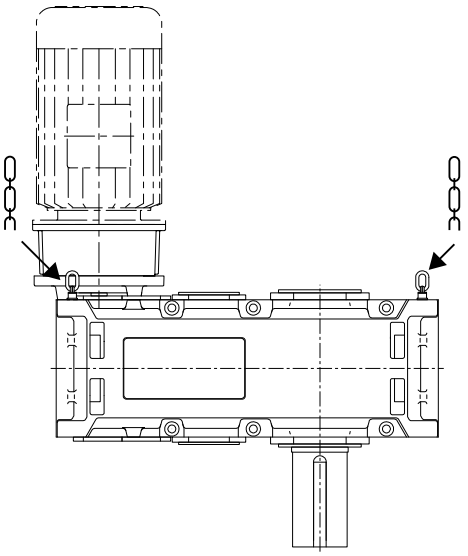

Figure 4-4 Position of the attachment points for gear units, type H..V with motor

The following diagram shows the position of the attachment points for gear units, type B..V with motor:

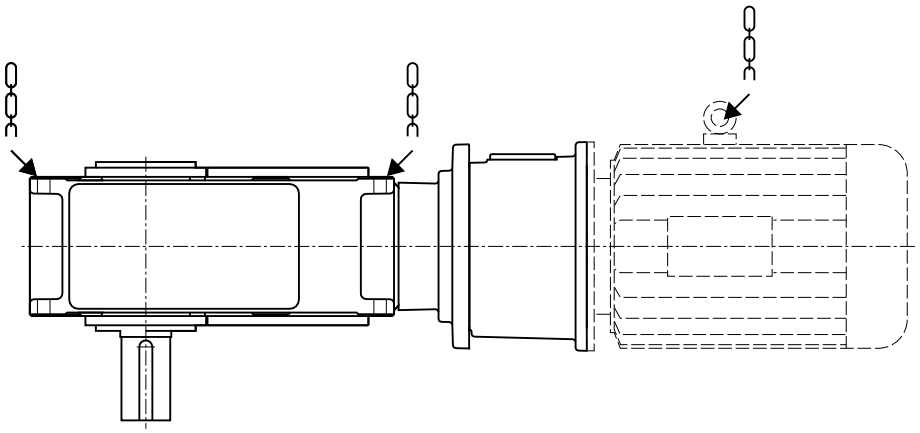

Figure 4-5 Position of the attachment points for gear units, type B..V with motor:

Drive units with additional components mounted on the gear unit (such as drive motor, coupling, etc.) may require an extra attachment point owing to the displacement in the centre of gravity caused by the mounted components.

Further information

Further information, a detailed illustration of the gear unit and the position of the attachment points can be found in the dimension drawings in the complete documentation for the gear unit.

4.4 Special aspects of gear unit lubrication and preservation

4.4.1 Regreasing rolling-contact bearings

4.4.1.1 Grease-lubricated rolling-contact bearing

When shipped from the factory, the lower output shaft bearing of the gear unit is filled with grease.

The following diagram shows the lubrication point for the lower output shaft bearing for type H.BV with oil retaining pipe:

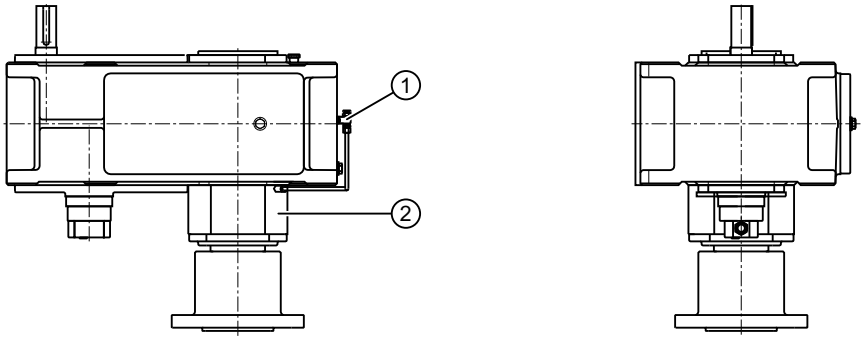

① Lubrication point ② Grease-lubricated rolling-contact bearing

Figure 4-6 Lubrication point for the lower output shaft bearing for type H.BV with oil retaining pipe:

The following diagram shows the lubrication point for the lower output shaft bearing for type B.BV with oil retaining pipe:

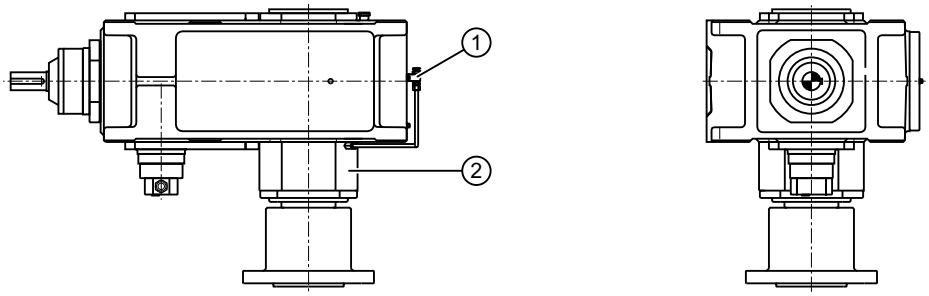

① Lubrication point ② Grease-lubricated rolling-contact bearing

Figure 4-7 Lubrication point for the lower output shaft bearing for type B.BV with oil retaining pipe

When stored for longer periods of time (> 6 months) in a position that deviates from the mounting position, before the gear unit is commissioned for the first time, an amount of grease stamped on the lubricant plate must be pressed in. The grease type is listed in Table "T 7300" (https://www.flender.com/lubricants).

The lubrication points are designated using the following sign:

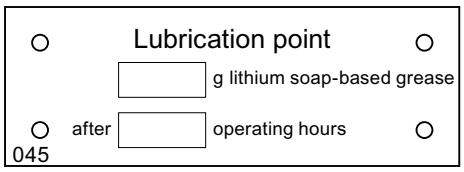

Figure 4-8 Sign: Lubrication point

Further information

Additional information and a detailed illustrated description of the gear unit can be found in the dimension drawing in the complete gear unit documentation.

Assembly

5

5.1 General assembly instructions

The assembly work must be performed very carefully by authorised, trained and suitably instructed personnel. Liability will be disclaimed for damage caused by the incorrect performance of this work.

Requirements

Improper use can damage the gear unit. Be sure to take the following precautions:

- Protect the gear unit against falling objects and from becoming covered over.
- Do not perform any welding work anywhere on the drive.
- Do not use the gear unit as an earthing point for electric-welding operations.
- Use all of the fastening points fitted to the particular unit design.
- Replace any bolts that are no longer fit for use by new bolts of the same strength class and type.
- Make sure that sufficient hoisting gear is available.

Mounting position and attachment points

During the actual planning phase, be sure to allow for sufficient space around the gear unit to enable subsequent upkeep and maintenance work. Take suitable measures to ensure that unhindered convection across the housing surface is possible so that the gear unit does not overheat. Leave sufficient space to allow a free flow of air into gear units that are equipped with a fan.

The positions of the attachment points are shown in the dimension drawing. To ensure that the unit is properly lubricated during operation, please observe the mounting position specified in the dimension drawings.



⚠ DANGER

Danger of explosion

Danger to life through ignition of a potentially explosive atmosphere possible during assembly work on the gear unit.

Assembly of the gear unit must not take place in an explosive environment.



⚠ DANGER

Danger of explosion due to gear unit heating caused by environmental effects.

Danger to life through ignition of a potentially explosive atmosphere possible if gear unit becomes overheated due to environmental effects.

The gear unit must not be heated by external heat sources (exposure to direct sunlight, for example) while it is in operation and measures must be taken where necessary to protect it.

You can take the following measures to protect the gear unit against this hazard:

- A sun shield
- An additional cooling device
- A temperature monitoring device with trip function in the oil sump

The ambient temperature range stamped on the rating plate must be complied with.

If you use a sun shield, this may cause a build-up of heat.

If you use a temperature monitoring device, it must be capable of issuing an alarm when the maximum permissible oil sump temperature is reached. It must also be capable of tripping the drive when the maximum permissible oil sump temperature is exceeded. The operator's process might be interrupted when the drive is shut down.



⚠ DANGER

Risk of explosion due to ignition of vapours emitted from solvents

There is danger to life due to ignition of vapours emitted from solvents or another explosive atmosphere when carrying out cleaning work.

It is not permissible that there is any explosive atmosphere in the area when carrying out cleaning work at the gear unit.

Please note the following:

- Ensure adequate ventilation.
- Do not smoke.

5.2 Unpacking the gear unit

Introduction

The scope of delivery is listed in the shipping documents.

⚠ WARNING
Severe injury caused by the content of the packing sliding
When opening the packing in which the part is transported, there is a risk of being crushed.
While being transported, the content of the packing can slide.
Carefully open the packing.
Wear suitable protective equipment (gloves, safety goggles).

⚠ WARNING
Risk of serious injury due to defective product
A defective gear unit can result in serious injury.
Do not put the gear unit into operation if any damage is visible.
Contact Customer Services.

Requirement

Check that everything has been delivered immediately upon receipt.

NOTICE
Damage to the gear unit due to corrosion
Exposing the gear unit to moisture can result in damage from corrosion.
Do not damage or open the packaging prematurely if the packaging is designed to preserve the unit.

Procedure

To unpack and use the gear unit, proceed as follows:

1. Remove packaging and transport devices in accordance with regulations.
2. Perform a visual inspection for damage and accumulations of dirt.
3. Immediately report any damaged and/or missing parts to Customer Services.
4. Dispose of packaging material and transport devices in accordance with regulations.

5.3 Gear unit assembly

5.3.1 Foundation

Properties of the foundation

The foundation must have the following properties:

- Stability
- Designed for torsional rigidity
- Reaction forces from the gear unit must be braced

Requirements of the foundation

The foundation must meet the following requirements:

- Construct the foundation in such a way that it does not generate any resonance vibrations and that it is isolated against the transmission of vibrations from adjacent foundations.
- Design the foundation according to the relevant weight and torque, taking into account the forces acting on the gear unit.
- Align the foundation carefully with the equipment installed on the input and output sides of the gear unit.
- Take into account any elastic deformation that may be caused by operating forces.
- Install lateral stops to prevent displacement if external forces are acting on the gear unit.

NOTICE
Lack of stable foundation for the gear unit Damage to the gear unit is possible if it is not mounted on a stable foundation. Use bolts of at least strength class 8.8. Information and guidance on the tightening torque can be found in chapter Tightening procedure (Page 115). Tighten the fastening bolts and nuts to the specified tightening torque. When tightening the fastening bolts, make sure that the gear unit is free of mechanical stress.

Further information

Further information about dimensions, space requirements and arrangement of supply connections can be found in the complete documentation for the gear unit.

5.3.1.1 Mounting on a concrete foundation

Mounting on a concrete foundation using foundation blocks

Requirement

The lower side of the gear unit mounting feet must be clean.

Gear unit with foundation blocks

The following diagram shows a foundation block:

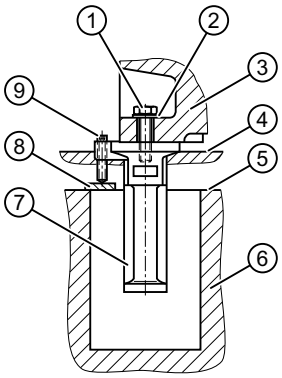

① Fastening bolt
② Washer
③ Gear unit foot
④ Height of the completed foundation
⑤ Height of the prepared foundation
⑥ Foundation
⑦ Foundation block
⑧ Flat steel plate
⑨ Set screw

Figure 5-1 Foundation block

Procedure

Proceed as follows to mount the gear unit using foundation blocks:

1. Attach the foundation blocks with washers and fastening bolts in the foundation mounting points in the gear unit housing.
2. Using a suitable crane or lifting gear, place the gear unit down on the concrete foundation.
3. Align the gear unit so that the input and output shafts are horizontal using the set screws (if available) (Page 79).
4. For higher external forces, if necessary, use lateral stops to prevent the gear unit shifting.
5. Before casting the foundation, close the openings in the foundation blocks using a suitable material (e.g. using polystyrene).

6. Pour concrete into the recesses in the concrete foundation for the stone bolts or foundation blocks.
7. After the concrete has set, tighten the hexagon nuts of the stone bolts or fastening bolts of the foundation blocks with the specified tightening torque (Page 117).

NOTICE
Damage caused by unevenly tightening the fastening bolts
The gear unit can be damaged by unevenly tightening the hexagon nuts or fastening bolts.
Evenly tighten the hexagon nuts or fastening bolts. Ensure that the gear unit is not deformed or distorted when tightening the fastening bolts.

Mounting on a concrete foundation using anchor bolts

Requirement

The lower side of the gear unit mounting feet must be clean.

Inserting the anchor bolt

The following diagram shows the inserted anchor bolt:

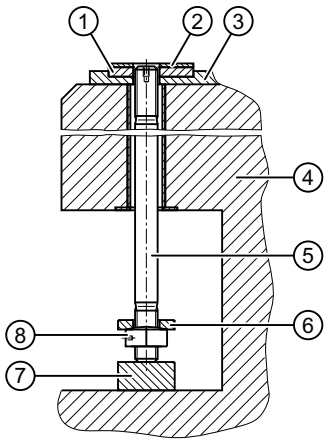

① Baseplate
② Support
③ Fine-grout concrete
④ Raw foundation
⑤ Anchor bolt
⑥ Pressure plate
⑦ Wood
⑧ Hexagon nut

Figure 5-2 Inserted anchor bolt

Proceed as follows to insert the anchor bolt:

1. Place the support on the baseplate embedded in the fine-grout concrete.
2. Insert the anchor bolt.

3. Attach the pressure plate and tighten the nuts.
4. Place a piece of wood under the anchor bolt so that it is approximately 10 mm from the upper edge of the support.
5. Place the gear unit down.

NOTICE
Use of incorrect attachment points
Use of incorrect attachment points may result in damage to the gear unit. When transporting the gear unit, only attach it at the lifting eyes provided for the purpose.
The threads in the end faces of the shaft ends may not be used for attaching lifting equipment.
Lifting equipment must be adequately designed to accommodate the weight of the gear unit.

Mounting the gear unit using anchor bolts

The following diagram shows a tightened anchor bolt:

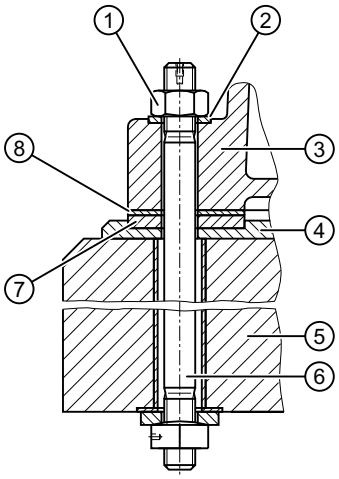

① Hexagon nut
② Washer
③ Housing foot
④ Fine-grout concrete
⑤ Raw foundation
⑥ Anchor bolt
⑦ Baseplate
⑧ Support

Figure 5-3 Tightened anchor bolt

Proceed as follows to mount the gear unit using anchor bolts:

1. Pull the anchor bolt upwards; to do this you can use a screw or threaded bar that you screw into the thread provided on the face side.
2. Attach the washer.
3. Screw on the hexagon nut by hand a few turns.

4. Align the gear unit with the supports (Page 79).
   – Observe the values on the alignment strips.
   – Maintain the alignment tolerances to the units connected at the input and output according to the permissible angular and axial displacements of the couplings.
5. Document the alignment dimensions in the form of a report, and archive this together with these instructions.
6. Keep the anchor bolts in their position by tightening the nuts by hand.
7. Locate the protective sleeve.
8. Attach the hydraulic clamping device.
9. Tighten the screws alternating, taking into account the preload forces (Page 117).
10. Tighten the hexagon nuts to their end stops using a suitable tool.
11. Document the tensioning pressures and preload forces, and archive this report together with these operating instructions.

⚠ CAUTION
Incorrect use of the preload tool
Incorrectly using the preload tool can result in injury.
To ensure correct handling and adjustment of the preload tool, you must carefully comply with the instructions provided in the manufacturers operating instructions for the preload tool.

NOTICE
Inadequate concrete hardness and strength
Damage caused by inadequate stability of the gear unit as a result of inadequate concrete hardness and strength is possible.
The fine-grout concrete must be allowed to harden for at least 28 days before tensioning the anchor bolts.

5.3.2 Mounting

5.3.2.1 Mounting on a housing foot

Description of assembly work

Measures to be taken prior to assembly



⚠ CAUTION

Risk of chemical burns due to chemical substances

There is a risk of chemical burns when handling aggressive cleaning agents.

Please observe the manufacturer's guidelines on how to handle cleaning agents and solvents. Wear suitable protective equipment (gloves, safety goggles). Please use binding agents to immediately clear up any spilt solvent.



⚠ WARNING

Risk of burns

There is a risk of serious burn injury from hot surfaces (> 55 °C).

Wear suitable protective gloves and protective clothing.

Improper use can damage the gear unit. Be sure to take the following precautions:

- Use a suitable cleaning agent to remove the corrosion protection from the shafts.
- Do not allow the cleaning agent to come into contact with the shaft-sealing rings.
- Mount the input elements (e.g. coupling parts) on the shafts and lock them securely.
- If these input elements must be fitted hot, the joining temperatures required are listed in the dimension drawings in the coupling operating instructions.
- Unless otherwise specified, heat the coupling parts by an induction heater, with a torch or in an oven.
- The elements must be quickly pulled onto the shaft as far as stated in the dimension drawing prepared in accordance with order specifications.

NOTICE

Risk of damage to shaft sealing rings due to heat

Shaft sealing rings can be damaged if they are heated up to over 100 °C.

Use the appropriate heat shields to protect against radiant heat.

NOTICE
Damage as a result of blows or impact
Damage in the gear unit as a result of blows or impact as possible.
Pull on the coupling using the appropriate pulling equipment.
Avoid damaging the shaft sealing rings and the shaft running surfaces when fitting coupling parts.

NOTICE
Poor alignment
The gear unit or individual components can be damaged as a result of poor alignment.
When installing and mounting the drive ensure that the individual components are precisely aligned with one another.
Inadmissibly high alignment errors of the shaft ends to be connected as a result of angular or axial offset result in premature wear and material damage.
Base frames or substructures that are too soft can cause the coupling parts to become radially and/or axially displaced during operation. This displacement is not measurable when the drive is at a standstill.

Further information

Further information about removing the corrosion protection can be found in the operating instructions BA 7300 in the complete documentation for the gear unit.

Additional information on how gear units should be attached which, as a result of their weight, require a crane or lifting gear, is provided in chapter Application planning (Page 63).

If the gear unit is transported with mounted parts and components, then it may be necessary to use additional attachment points. The position of these attachment points can be found in the order-specific dimension drawing in the complete documentation for the gear unit.

Alignment

Depending on the order specification, the top of the housing has machined surfaces (alignment surfaces) to assist with provisional alignment of the gear unit in the horizontal direction.

⚠ DANGER

Risk of fatal injury from flying fragments

Failure to align the unit with the required degree of accuracy can cause the shaft to rupture. A ruptured shaft can result in serious or even fatal injuries.

Align the gear unit exactly so that it conforms to the specified alignment values.

Damage to the gear unit or its components or mounted parts is possible.

The accuracy of the alignment between the shaft axes largely determines the service life of the shafts, bearings and couplings. Please therefore always endeavour to achieve zero deviation in the alignment of the shaft axes (does not apply to ZAPEX couplings). In this context, please also refer to the relevant operating instructions for further information about, for example, the requirements of couplings.

Procedure

The gear unit can be equipped with alignment threads in the housing feet to make it simpler to align.



Figure 5-4 Alignment surface

To align the gear unit by its alignment surface, proceed as follows:

1. For the precise position of the alignment surfaces, refer to the dimension drawings in the complete documentation.
2. Note the values inscribed in the alignment surfaces.
3. Use these surfaces as a guide for aligning the gear unit horizontally to ensure that it will run smoothly.

The following diagram shows the alignment surfaces at the gear unit:

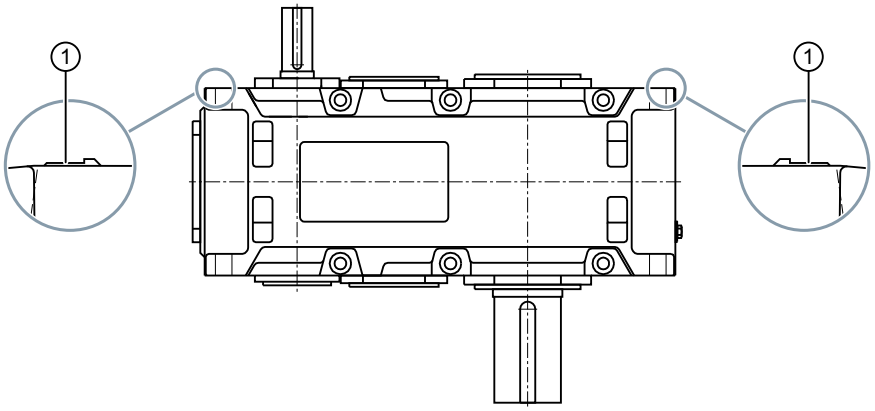

① Alignment surfaces

Figure 5-5 Alignment surfaces at the gear unit

Further information

Further information and the precise position of the alignment thread are provided in the dimension drawing in the overall gear unit documentation.

Tools

The following tools are needed to perform the final fine alignment (Page 109) work on the shaft axes of the gear unit and the equipment installed on the input and output sides.

- Rulers
- Spirit level
- Dial gauge
- Feeler gauge etc.

Once the gear unit is finely aligned, tighten the foundation bolts and check the settings again. Record the alignment dimensions and keep the report in a safe place together with these operating instructions.

5.3.2.2 Mounting on a mounting flange or block flange

Mating flange on the machine side

Measures to be taken prior to assembly

Be sure to take the following precautions before mounting the mating flange on the machine side:

- Design and construct the mating flange so that no resonant vibration occurs - and no shock and vibration can be transmitted from adjacent foundations.
- The mating flange assembly that is to be mounted on the gear unit must be torsionally stiff.
- Design the mating flange corresponding to the weight and the torque, taking into account the forces that act on the gear unit itself.
- Very carefully align the units connected at the input - and output - and take into account, where relevant, any elastic deformation as a result of the operational forces.

Poor alignment

The gear unit can be damaged as a result of poor mating flange alignment.

The mating flange must be absolutely horizontal and level. When tightening the fastening bolts, make sure that the gear unit is free of mechanical stress.

NOTICE
Poor stability
Damage to the gear unit is possible if it is not mounted on a stable foundation.
Tighten the fastening bolts and nuts to the specified tightening torque (Page 117).
Always use bolts with a strength class (property class) of 8.8.

Further information

You can find additional information on dimensions, space requirement and arrangement of the supply connections (for example, separately supplied oil cooling systems) in the dimension drawings in the overall gear unit documentation.

Assembly

Introduction

Risk of damage to shaft sealing rings due to heat

Shaft sealing rings can be damaged if they are heated up to over 100 °C .

Use the appropriate heat shields to protect against radiant heat.



NOTICE
Risk of damage to shaft sealing rings from aggressive chemical cleaning agents
Aggressive chemical cleaning agents may cause damage to shaft sealing rings.
Do not allow the cleaning agent to come into contact with the shaft-sealing rings.

Measures to be taken prior to assembly

Improper use can damage the gear unit. Be sure to take the following precautions:

- Use a suitable cleaning agent to remove the corrosion protection from the shafts.
- Mount the input elements (e.g. coupling parts) on the shafts and lock them securely.
- If these must be fitted hot, the joining temperatures required are listed in the dimension drawings in the coupling operating instructions.
- Unless otherwise specified, heat the coupling parts by an induction heater, with a torch or in an oven.



⚠ WARNING
Hot surfaces.
Hot surfaces represent a serious risk of burn injury (> 55 °C).
Wear suitable protective gloves and protective clothing.

Further information

Additional information on how gear units should be attached which, as a result of their weight, require a crane or lifting gear, is provided in chapter Application planning (Page 63).

If the gear unit is to be transported with mounted parts and components, then it may be necessary to use additional attachment points. The position of these attachment points can be found in the order-specific dimension drawing in the complete documentation for the gear unit.

Requirements

Fulfil the following requirements before mounting:

- Provide a centring shoulder (Ø d_3) on the mounting or block flange at the gear unit on the output side.
- Machine a bore (fit H7) that matches this centring shoulder in the mating flange on the machine side.
- When aligning the machine shaft to the mating flange, keep the radial and angular misalignment as low as possible.

- Do not use any contaminated solvents or soiled cleaning cloths, nor any cleaning agents that contain oil (such as petroleum or turpentine) to degrease the surfaces.
- The area around the face of the mounting and mating flange must be absolutely free of any grease. The reliability with which torque is transmitted depends to a large extent on this.

⚠ DANGER

Risk of fatal injury from flying fragments

Non-adherence to the alignment accuracy can result in a broken shaft and as a consequence risk to life and injury.

Align the gear unit exactly so that it conforms to the specified alignment values.

Damage to the gear unit or its components or mounted parts is possible.

The accuracy of the alignment between the shaft axes largely determines the service life of the shafts, bearings and couplings. Please therefore always endeavour to achieve zero deviation in the alignment of the shaft axes (does not apply to ZAPEX couplings).



⚠ CAUTION

Risk of injury due to chemical substances

Observe the manufacturer's guidelines on how to handle lubricants and solvents.

Wear suitable protective clothing.

Mounting gear units with mounting flange or block flange

Procedure

To mount the gear unit with mounting flange or block flange, proceed as follows:

1. Clean the contact surfaces of the mounting or block flange of the gear unit and the mating flange on the machine side.
2. Using a suitable crane or lifting gear, place the gear unit down onto the mating flange.
3. Tighten the flange bolts.

The following diagram shows the gear unit with mounting flange or block flange:

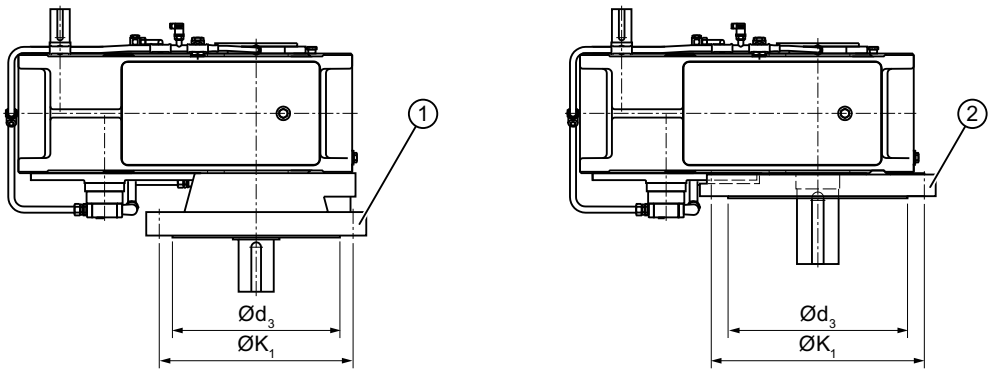

① Mounting flange ② Block flange

Figure 5-6 Gear unit with mounting flange or block flange

NOTICE
The gear unit can be damaged by unevenly tightening the flange bolts.
The gear unit can be damaged by unevenly tightening the flange bolts.
Tighten the flange bolts crosswise and evenly with the full torque. Ensure that the gear unit is not deformed or distorted when tightening the flange bolts.

Further information

You can find additional information about the requirements relating to couplings in the associated operating instructions.

Mounting gear units with hollow output shaft

Requirements

Fulfil the following requirements before mounting:

- Provide a centring shoulder (Ø d_3) on the mounting or block flange at the gear unit on the output side.
- For a machine shaft with only bearings on one side, machine a bore (fit H7) that matches this centring shoulder in the mating flange on the machine side. The gear unit performs the function of the second bearing location.
- When aligning the machine shaft to the mating flange, keep the radial and angular misalignment as low as possible.
- Do not use any contaminated solvents or soiled cleaning cloths, nor any cleaning agents that contain oil (such as petroleum or turpentine) to degrease the surfaces.
- The area around the face of the mounting and mating flange must be absolutely free of any grease. The reliability with which torque is transmitted depends to a large extent on this.
- Apply an appropriate lubricant to the contact surfaces to protect them against fretting corrosion.

Procedure

⚠ DANGER

Risk of fatal injury from flying fragments

Non-adherence to the alignment accuracy can result in a broken shaft and as a consequence risk to life and injury.

Align the gear unit exactly so that it conforms to the specified alignment values.

Damage to the gear unit or its components or mounted parts is possible.

The service life of the shafts, bearings and couplings essentially depends on the alignment accuracy of the machine shaft to the mating flange. As a consequence, always try to achieve a zero deviation.



⚠ CAUTION

Risk of injury due to chemical substances

Observe the manufacturer's guidelines on how to handle lubricants and solvents.

Wear suitable protective clothing.



NOTICE

Risk of damage to shaft sealing rings from aggressive chemical cleaning agents

Aggressive chemical cleaning agents may cause damage to shaft sealing rings.

Do not allow the cleaning agent to come into contact with the shaft-sealing rings.

To mount the gear unit with hollow input shaft, proceed as follows:

1. Clean the contact surfaces of the mounting or block flange of the gear unit and the mating flange on the machine side.
2. Use a suitable cleaning agent to remove the corrosion protection from out of the hollow shaft and machine shaft.
3. Inspect the hollow and machine shafts for damaged seats and edges. If necessary, post work the parts using a suitable tool and then clean these parts again.
4. Using a suitable crane or lifting gear, pull on the gear unit using nuts and screw spindle. Place the gear unit down on the mating flange on the machine side.

The following diagram shows the gear unit with hollow output shaft:

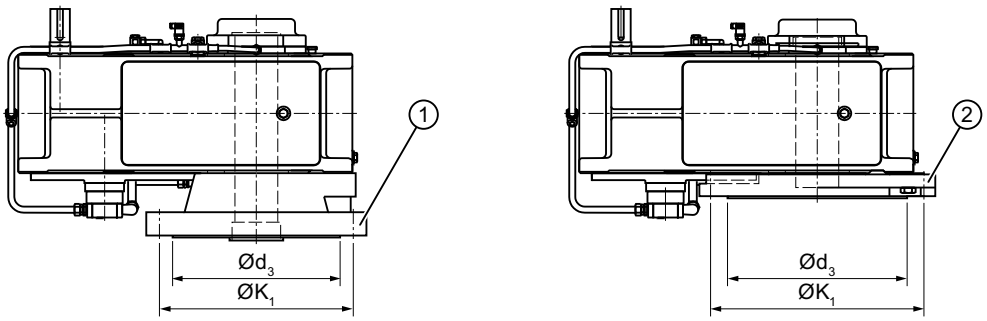

① Mounting flange ② Block flange

Figure 5-7 Gear unit with hollow output shaft

NOTICE
Centring the agitator gear unit in the mating flange
The gear unit can be damaged by centring the agitator gear unit (centring shoulder Ø d_3) in the mating flange.
For a machine shaft located in two bearings in the mating flange on the machine side, centring the agitator gear unit (centring shoulder Ø d_3) in the mating flange is not permissible (as a result of overdetermination).

Further information

You can find additional information about the permissible tolerances in the associated operating instructions.

5.3.3 Mounting the torque arm for the gear unit housing

5.3.3.1 Mounting the torque arm

NOTICE
Damage to the gear unit due to incorrect mounting of the motor and torque arm
Damage to the gear unit due to incorrect mounting of the motor and torque arm is possible
The motor and torque arm may only be mounted after prior consultation with Flender. Mount the torque arm to the machine side without causing any distortion or deformation.

The following diagram shows the torque arm for the gear unit housing:

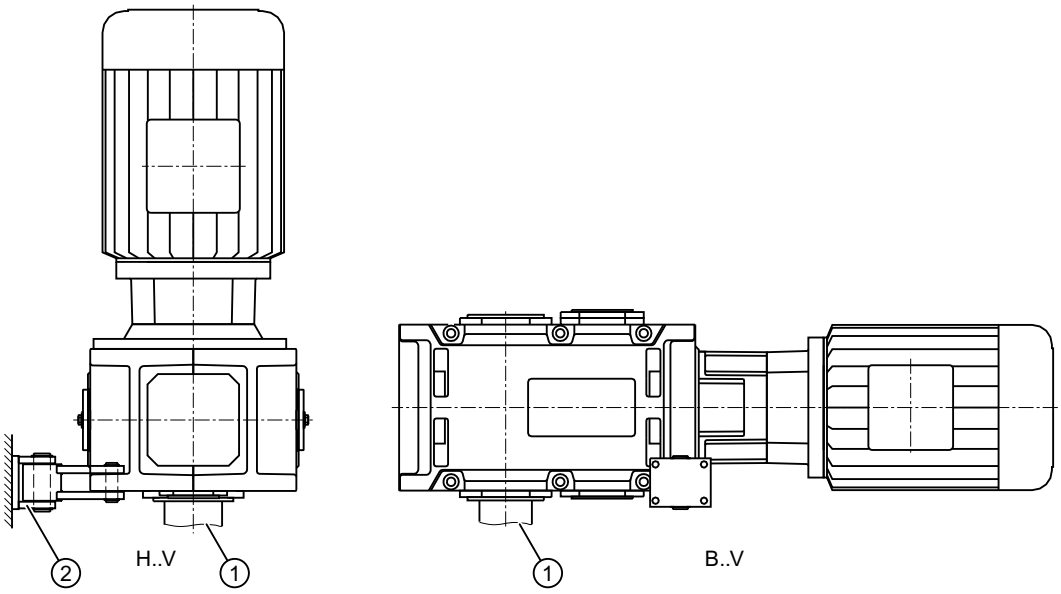

① Machine side ② Elastic pedestal

Figure 5-8 Torque arm for the gear unit housing

Further information

Further information about constructing the foundation for gear units with a torque arm can be found in chapter Foundation (Page 74).

5.3.4 Mounting the coupling flange on the output side

Measures to be taken prior to assembly

Ensure that the following measures are applied before mounting the coupling flange on the output side:

- The area around the face of the coupling flange must be absolutely free of any grease. The reliability with which torque is transmitted depends to a large extent on this.
- Do not use any contaminated solvents or soiled cleaning cloths, nor any cleaning agents that contain oil (such as petroleum or turpentine) to degrease the surfaces.
- Before tightening the tensioning screws, ensure that the flange is centred.

NOTICE
The gear unit can be damaged by unevenly tightening the tensioning screws.
The gear unit can be damaged by unevenly tightening the tensioning screws.
Tighten the tensioning screws crosswise and evenly with the full torque. Ensure that the gear unit is not deformed or distorted when tightening the flange bolts.

Further information

You can find additional information about the tightening torque of the tensioning screws in the dimension drawings in the coupling operating instructions. Replace any bolts that are no longer fit for use by new bolts of the same strength class and type.

5.4 Shaft-mounted gear unit with hollow shaft and parallel keyway

The shaft end of the driven machine shaft (material C60+N or higher strength) must have a parallel key as defined by DIN 6885, Part 1, form A. Furthermore, it should have a hole centred in its end face as defined by DIN 332, form DS (with thread). The connection dimensions for the driven machine shaft can be found in the dimension drawing in the complete documentation.

5.4.1 Preparations

Preparatory measures

To facilitate dismantling (Page 94), insert a pressure oil connector into the shaft end of the driven machine until it is flush with the bore of the hollow shaft. This connector can also be used to feed in rust remover.

The following diagram illustrates the preparations required for gear units with a hollow shaft and parallel keyway:

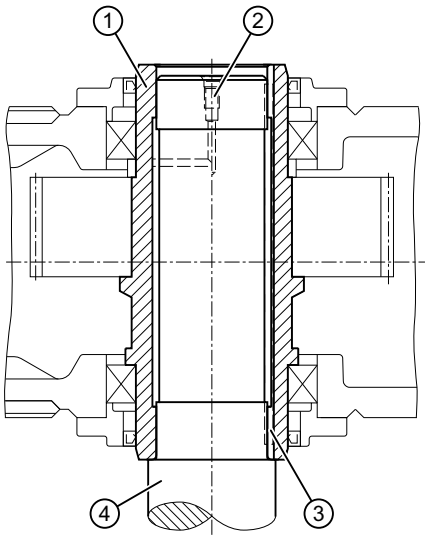

① Hollow shaft
② Pressure oil connector
③ Parallel key
④ Machine shaft

Figure 5-9 Preparations for gear units with a hollow shaft and parallel keyway

5.4.2 Assembly

5.4.2.1 Introduction

Measures to be taken prior to assembly



⚠ CAUTION

Risk of injury due to chemical substances

Observe the manufacturer's guidelines on how to handle lubricants and solvents.

Wear suitable protective clothing.

Improper use can damage the gear unit. Be sure to take the following precautions:

- Use a suitable cleaning agent to remove the corrosion protection from the hollow shaft and the machine shaft.
- Inspect the hollow and machine shafts for damaged seats and edges.
- If necessary, rework the components with an appropriate tool and then clean them again.
- Apply an appropriate lubricant to the contact surfaces to protect them against fretting corrosion.

NOTICE
Risk of damage to shaft sealing rings from cleaning agent
Aggressive chemical cleaning agents may cause damage to shaft sealing rings.
Do not allow the cleaning agent to come into contact with the shaft-sealing rings.

5.4.2.2 Mounting

Procedure

NOTICE
Damage to the gear unit
The gear unit can become damaged if it skews during assembly.
The hollow shaft must be flush with the machine shaft during assembly of the gear unit on the machine shaft. The gear unit must be prevented from skewing.

NOTICE
Damage to the rolling-contact bearings
The rolling-contact bearings can become damaged if the gear unit skews during mounting.
The hollow shaft may be mounted on a machine shaft shoulder only if the gear unit features one of the following: • Torque arm • Elastic pedestal • Supported by gear unit swing base

Proceed as follows to install the gear unit:

1. Use suitable hoisting gear to lift the gear unit.
2. Mount the gear unit using the nut and screw spindle.
   The gear unit is supported by the hollow shaft.

The diagram below shows the mounting process with screw spindle for gear units with a hollow shaft and parallel keyway:

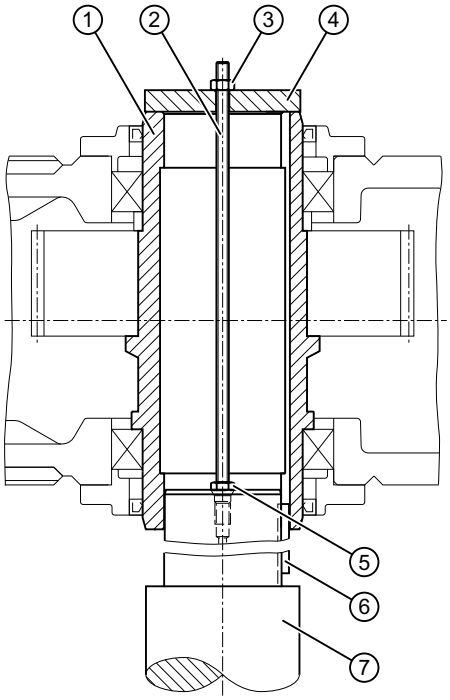

① Hollow shaft
② Screw spindle
③ Nut
④ End plate
⑤ Nut
⑥ Parallel key
⑦ Machine shaft

Figure 5-10 Screw spindle for gear units with hollow shaft and parallel keyway

Special aspects of shaft-mounted gear units with hollow shaft and parallel keyway

Hydraulic pulling equipment can be used instead of the nut and screw spindle shown in the diagram.

5.4.2.3 Axial locking

Depending on the version, the hollow shaft must be locked axially on the machine shaft (e.g. by a locking ring, end plate, adjusting screw).

5.4.3 Dismantling

Measures prior to dismantling

NOTICE
Damage to the gear unit The gear unit can become damaged if it skews during dismantling. Do not allow the gear unit to skew as you remove it from the machine shaft. When removing the gear unit using hydraulic pulling equipment, excessive force can be placed on the housing, bearings and other gear unit components. Always check the hollow shaft bearings for damage before reattaching the gear unit to the machine shaft.

Note

Reducing the risk of corrosion

When using jacking screws or screw spindles, to avoid the risk of corrosion, round off and grease the end of the thread (head) that presses against the driven machine.

Procedure

In order to dismantle a shaft-mounted gear unit from the machine shaft, proceed as follows:

1. Remove the axial locking element from the hollow shaft.
2. If fretting corrosion has formed on the seat surfaces, rust remover must be applied so that the gear unit can be more easily detached. The rust remover can be pumped in through the pressure oil connector.
3. Wait for the rust remover to work and then use a fixture to dismantle the gear unit.
4. Depending on the conditions on site, you can use one of the following methods to remove the gear unit from the machine shaft:
   - With jacking screws in an end plate
   - With a central screw spindle
   - Using hydraulic pulling equipment

The following diagram shows the dismantling procedure using an end plate for gear units with a hollow shaft and parallel keyway:

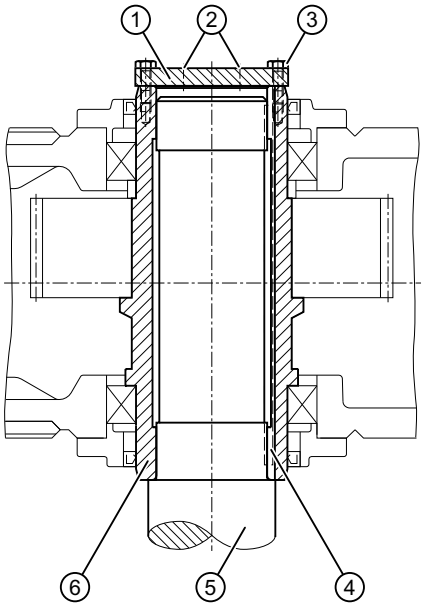

① End plate for pressing out
② Jacking screws
③ Bolts
④ Parallel key
⑤ Machine shaft
⑥ Hollow shaft

Figure 5-11 Dismantling using an end plate

The following diagram shows the dismantling procedure using hydraulic pulling equipment for gear units with hollow shaft and parallel keyway:

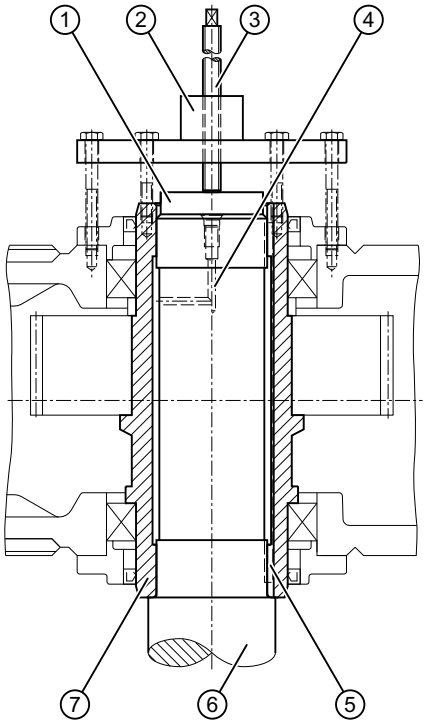

① Auxiliary plate for pressing out
② Hydraulic pulling equipment
③ Screw spindle
④ Pressure oil connector
⑤ Parallel key
⑥ Machine shaft
⑦ Hollow shaft

Figure 5-12 Dismantling using hydraulic pulling equipment

End plate and auxiliary plate

The end plate and auxiliary plate for removing the gear unit are not supplied as standard with the gear unit. Both end faces of the hollow shaft have threaded holes for attaching the end plate to the shaft.

Further information

Further information and a detailed illustration of these threaded holes can be found in the dimension drawing in the complete documentation for the gear unit.

Threaded holes at the face sides of gear unit hollow shafts

You can obtain the dimensions for the threaded holes at the face sides of gear unit hollow shafts on request

Improper use can damage the gear unit. Be sure to take the following precautions:

- When removing a gear unit that is not only supported at the hollow shaft, but also at the housing, ensure that the specified forcing pressures are not exceeded.
- Always check the hollow shaft bearings for damage before reattaching the gear unit to the machine shaft.
- When using jacking screws or screw spindles, to avoid the risk of corrosion, round-off and grease the end of the thread that presses against the driven machine.

Maximum forcing pressures

You can obtain the maximum forcing pressures on request.

5.5 Shaft-mounted gear unit with hollow shaft and spline according to DIN 5480

Introduction

The shaft end of the driven machine must have a spline according to DIN 5480. Furthermore, it should have a hole centred in its end face as defined by DIN 332, form DS (with thread).

Further information

Further information about the connection dimensions of the driven machine shaft can be found in the dimension drawing in the complete documentation for the gear unit.

5.5.1 Preparations

To make it simpler to remove (Page 101), we recommend that a pressurised oil connection is provided in the shaft end of the driven machine, which is drilled through to the recess in the hollow shaft. This connector can also be used to feed in rust remover.

The following diagram shows the preparation for gear units with hollow shaft and spline:

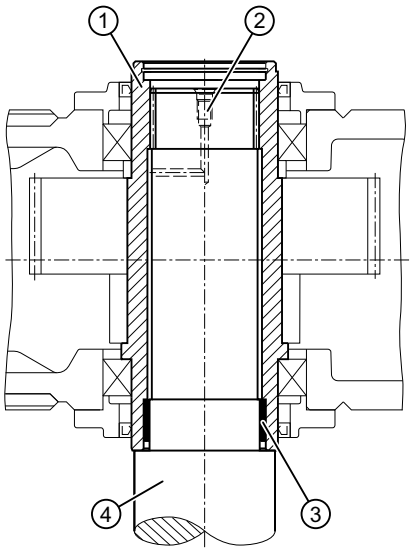

① Hollow shaft
② Pressure oil connector
③ DU bushing
④ Machine shaft

Figure 5-13 Preparation for gear units with hollow shaft and spline

5.5.2 Assembly

Measures to be taken prior to assembly



⚠ CAUTION

Risk of injury due to chemical substances

Observe the manufacturer's guidelines on how to handle lubricants and solvents.

Wear suitable protective clothing.

Improper use can damage the gear unit. Be sure to take the following precautions:

- Use a suitable cleaning agent to remove the corrosion protection from the hollow shaft and the machine shaft.
- Inspect the hollow and machine shafts for damaged seats and edges.
- If necessary, rework the components with an appropriate tool and then clean them again.
- Apply an appropriate lubricant to the contact surfaces to protect them against fretting corrosion.

NOTICE
Risk of damage to shaft sealing rings
Aggressive chemical cleaning agents may cause damage to shaft sealing rings.
Do not allow the cleaning agent to come into contact with the shaft-sealing rings.

5.5.2.1 Pulling on with integrated DU bushing

Procedure

NOTICE
Damage to the gear unit
The gear unit can become damaged if it skews during assembly.
When mounting the gear unit, make sure that the hollow shaft and machine shaft are aligned and ensure that the machine shaft splines and hollow shaft splines match up. You can identify the correct spline position by rotating the input shaft or gently swivelling the gear unit on the hollow shaft.

NOTICE
Damage to the rolling-contact bearings
The rolling-contact bearings can become damaged if the gear unit skews during mounting.
The hollow shaft may be mounted on a machine shaft shoulder only if the gear unit features one of the following: • Torque arm • Elastic pedestal • Supported by gear unit swing base

Proceed as follows to mount the gear unit with integrated DU bushing:

1. Use suitable hoisting gear to lift the gear unit.
2. Mount the gear unit using the nut and screw spindle.
   The gear unit is supported by the hollow shaft.



⚠ WARNING
Danger of explosion
It is not permissible that there is any explosive atmosphere anywhere in the area when carrying out cleaning work at the gear unit.

The following diagram shows the mounting process with integrated DU bushing for gear units with a hollow shaft and spline:

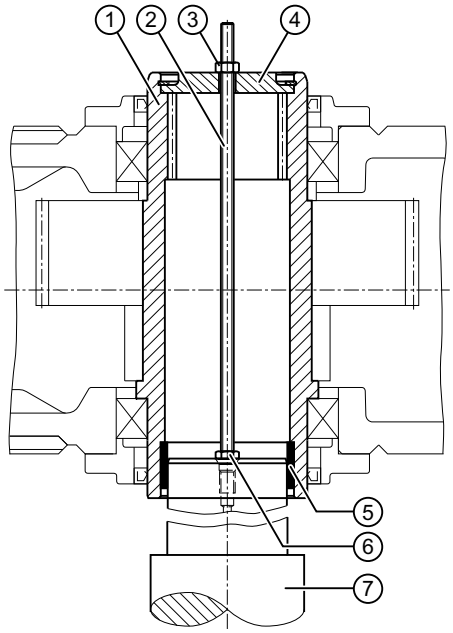

① Hollow shaft
② Screw spindle
③ Nut
④ End plate
⑤ DU bushing
⑥ Nut
⑦ Machine shaft

Figure 5-14 Mounting process with integrated DU bushing for gear units with a hollow shaft and spline

Special aspects of shaft-mounted gear unit with hollow shaft and spline according to DIN 5480

Hydraulic pulling equipment can be used instead of the nut and screw spindle shown in the diagram.

5.5.2.2 Axial locking

Depending on the version, the hollow shaft must be locked axially on the machine shaft (e.g. by a locking ring, end plate, adjusting screw).

5.5.3 Dismantling

Measures prior to dismantling

NOTICE
Damage to the gear unit
The gear unit can become damaged if it skews during dismantling.
Do not allow the gear unit to skew as you remove it from the machine shaft. When removing the gear unit using hydraulic pulling equipment, excessive force can be placed on the housing, bearings and other gear unit components. Always check the hollow shaft bearings for damage before reattaching the gear unit to the machine shaft.

Note

Reducing the risk of corrosion

When using jacking screws or screw spindles, to avoid the risk of corrosion, round off and grease the end of the thread (head) that presses against the driven machine.

Procedure

To remove the shaft-mounted gear unit with hollow shaft from the machine shaft, proceed as follows:

1. Remove the axial locking element from the hollow shaft.
2. If fretting corrosion has formed on the seat surfaces, rust remover must be applied so that the gear unit can be more easily detached. The rust remover can be pumped in through the pressure oil connector.
3. To do this, first remove the end plate and locking ring.
4. Wait for the rust remover to work and then use a fixture to dismantle the gear unit.
5. Depending on the conditions on site, you can use one of the following methods to remove the gear unit from the machine shaft:
   - With jacking screws in an end plate
   - With a central screw spindle
   - Using hydraulic pulling equipment

The following diagram shows the dismantling procedure using an end plate for gear units with a hollow shaft and spline:

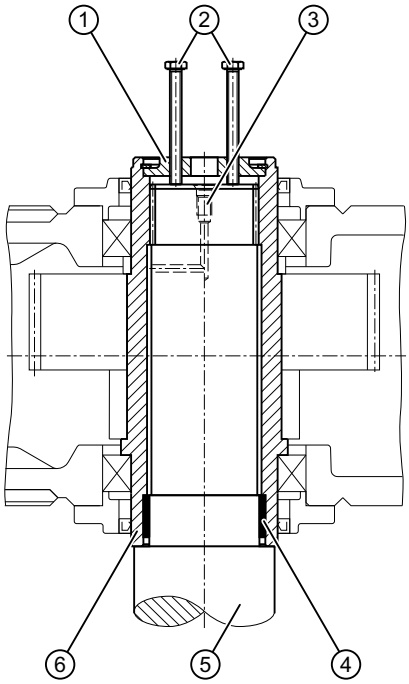

① End plate
② Jacking screws
③ Pressure oil connector
④ DU bushing
⑤ Machine shaft
⑥ Hollow shaft

Figure 5-15 Dismantling procedure with end plate for gear units with hollow shaft and spline:

The following diagram shows the dismantling procedure using hydraulic pulling equipment for gear units with hollow shaft and spline:

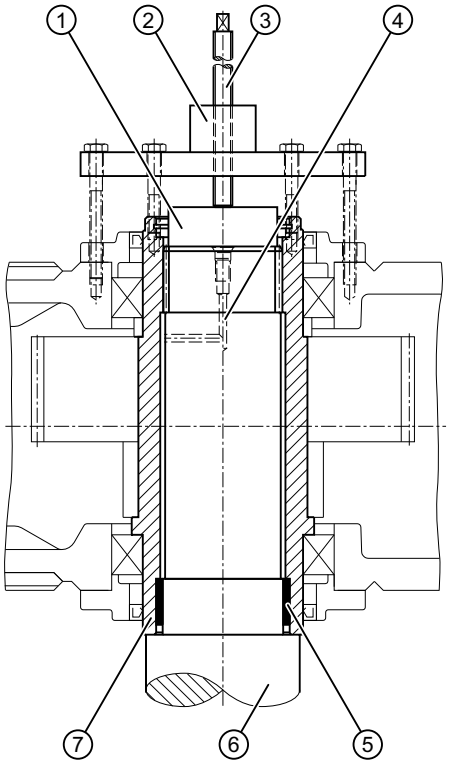

① Auxiliary plate for pressing out
② Hydraulic pulling equipment
③ Screw spindle
④ Pressure oil connector
⑤ Parallel key
⑥ Machine shaft
⑦ Hollow shaft

Figure 5-16 Dismantling using hydraulic pulling equipment for gear units with hollow shaft and spline

Note

The end plate and auxiliary plate are not included in the scope of delivery of the gear unit.

The end plate and auxiliary plate for removing the gear unit are not supplied as standard with the gear unit.

Both end faces of the hollow shaft have threaded holes for attaching the end plate to the shaft.

Further information

Additional information and detailed illustrated description of the threaded holes can be found in the dimension drawing provided in the complete gear unit documentation.

5.6 Shaft-mounted gear unit with hollow shaft and shrink disk

Introduction

The shaft end of the driven machine shaft (material C60+N or higher strength) should have a hole centred in its end face as defined by DIN 332, form DS (with thread).

Further information

Further information about the connection dimensions of the driven machine shaft can be found in the dimension drawing in the complete documentation for the gear unit.

5.6.1 Assembly

Measures to be taken prior to assembly



⚠ CAUTION
Risk of injury due to chemical substances
Observe the manufacturer's guidelines on how to handle lubricants and solvents.
Wear suitable protective clothing.

Improper use can damage the gear unit. Be sure to take the following precautions:

- Use a suitable cleaning agent to remove the corrosion protection from the hollow shaft and the machine shaft.
- Inspect the hollow shaft and machine shaft for damaged seats and edges.
- If necessary, rework the components with an appropriate tool and then clean them again.

NOTICE
Risk of damage to shaft sealing rings
Aggressive chemical cleaning agents may cause damage to shaft sealing rings.
Do not allow the cleaning agent to come into contact with the shaft-sealing rings.

Note

The bore of the hollow shaft and the machine shaft must be free of any grease

Make sure that the hollow shaft bore and the machine shaft are completely free of grease in the area around the shrink disk seat. The reliability with which torque is transmitted depends to a large extent on this.

Do not use any contaminated solvents or soiled cleaning cloths, nor any cleaning agents that contain oil (such as petroleum or turpentine) to degrease the surfaces.



⚠ DANGER

Danger of explosion

Danger to life through ignition of a potentially explosive atmosphere caused by sparks or hot surfaces.

If there is slip between the hollow shaft and stub shaft, or if the shrink disk slips on the hollow shaft, this can cause sparks and/or hot surfaces.

- Ensure that bore of the hollow shaft and the stub shaft in the area of the shrink disk seat are absolutely clean and free of any grease and oil.
- Ensure that the shrink disk is correctly mounted and tensioned before the system is switched on.

5.6.1.1 Pulling on with integrated DU bushing

Procedure

NOTICE

Damage to the gear unit

The gear unit can become damaged if it skews during assembly.

The hollow shaft must be flush with the machine shaft during assembly of the gear unit on the machine shaft. The gear unit must be prevented from skewing.

NOTICE

Damage to the rolling-contact bearings

The rolling-contact bearings can become damaged if the gear unit skews during mounting.

The hollow shaft may be mounted on a machine shaft shoulder only if the gear unit features one of the following:

- Torque arm
- Elastic pedestal
- Supported by gear unit swing base

Proceed as follows to mount the gear unit with hollow shaft and shrink disk onto the driven machine shaft with integrated DU bushing:

1. Use suitable hoisting gear to lift the gear unit.
2. Mount the gear unit using the nut and screw spindle.
   The gear unit is supported by the end plate in the hollow shaft.
3. Pull on the gear unit with hollow shaft up to the seat below the shrink disk on the machine shaft.
   The machine shaft centres itself in the seat below the shrink disk and in the DU bushing.
4. Mount the hollow shaft against the machine shaft collar:

Special aspects of shaft-mounted gear units with hollow shaft and shrink disk

Pull on the gear unit with hollow shaft up to the seat below the shrink disk on the machine shaft. The machine shaft centres itself in the seat below the shrink disk and in the DU bushing.

The following diagram shows the preparation for gear units with hollow shaft and shrink disk:

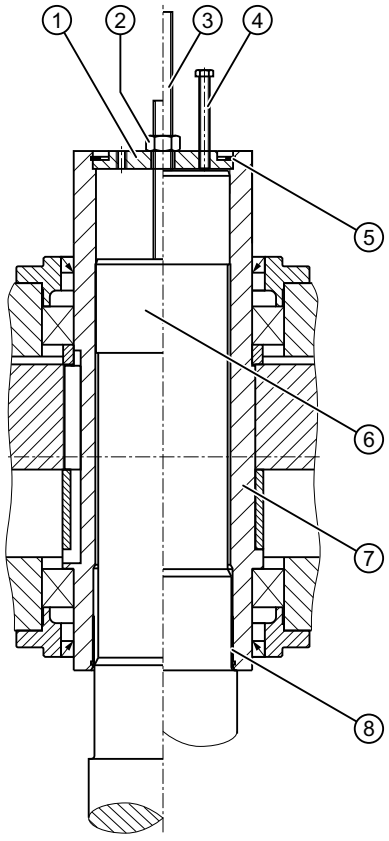

① End plate
② Nut
③ Screw spindle
④ Jacking screw
⑤ Locking ring
⑥ Machine shaft
⑦ Hollow shaft
⑧ DU bushing

Figure 5-17 Preparation for gear units with hollow shaft and shrink disk

Parts 2, 3 and 4 are not included in the scope of delivery.

5.6.1.2 Mounting with DU bushing as a separate component

Notes about mounting with DU bushing as a separate component

Canting must be avoided as the gear unit can be damaged when mounting. The hollow shaft must be flush with the machine shaft during assembly of the gear unit on the machine shaft.

The hollow shaft may be mounted on a machine shaft shoulder only if the gear unit features one of the following:

- Torque arm
- Elastic pedestal
- Bracing by gear unit swing base

Procedure

Proceed as follows to mount the gear unit with hollow shaft and shrink disk onto the driven machine shaft with a DU bushing as a separate component:

1. Push the separately supplied DU bushing onto the machine shaft.
2. Use a ratchet tie to tighten the DU bushing until it makes secure contact with the shaft.
3. Move the DU bushing together with the machine shaft into the hollow shaft of the gear unit.

Special aspects of shaft-mounted gear units with hollow shaft and shrink disk

Hydraulic pulling equipment can be used instead of the nut and screw spindle shown in the diagram.

5.6.1.3 Axial locking

Tightening the shrink disk as per specification ensures that the gear unit is properly axially locked. It is not necessary to install any further axial locking elements.

5.6.2 Dismantling the shaft-mounted gear unit

Procedure

1. Dismantle the shrink disk.
2. Lift the gear unit off the machine shaft using jacking screws until the seats under the shrink disk and the DU bushing are exposed.
3. Use suitable hoisting gear to lift the gear unit off the machine shaft.

NOTICE
Use of incorrect attachment points Use of incorrect attachment points may result in damage to the gear unit. • Only attach the gear unit at the lifting eyes provided for this purpose. • Do not use the pipework to move the gear unit. The pipework must not be damaged. • Do not use the threads in the end faces of the shaft ends for attaching lifting equipment to transport the gear unit. • Lifting equipment must be adequately designed to accommodate the weight of the gear unit.

5.7 Shaft-mounted gear unit with flange coupling

Requirement

Ensure that in the area around the shrink disk seat, the bore of the hollow shaft and the machine shaft must be absolutely free of any grease. The reliability with which torque is transmitted depends to a large extent on this. Do not use any contaminated solvents or soiled cleaning cloths, nor any cleaning agents that contain oil (such as petroleum or turpentine) to degrease the surfaces.

Mounting a shaft-mounted gear unit with flange coupling

In order to avoid damaging the gear unit by canting it and by unevenly tightening the tensioning screws proceed as follows.

1. Before tightening the tensioning screws, ensure that the flanges are centred with respect to one another.
2. Tighten the tensioning screws crosswise and evenly with the full torque.
3. Avoid deforming or distorting the gear units when tightening the tensioning screws.

Note

Replace any bolts that are no longer fit for use by new bolts of the same strength class and type.

Further information

You can find additional information about the tightening torque of the tensioning screws in the dimension drawings in the coupling operating instructions.

5.8 Couplings

Introduction

The coupling parts might become misaligned as a result of:

- Failure to accurately align the parts during assembly
- During operation of the system:
  - Due to thermal expansion
  - Due to shaft deflection
  - Due to machine frames that are too soft

NOTICE
Damage or destruction of the coupling through incorrect alignment
Refer to the coupling operating instructions for the maximum permissible displacements. Under no circumstances may these values be exceeded in operation.
Angular and radial displacement might occur simultaneously. Make sure that the total value of both displacements does not exceed the maximum permissible angular or radial displacement value.
If couplings from other manufacturers are to be used, then, specifying the radial loads that occur, ask the manufacturer which alignment errors are permissible.

The following diagram shows the possible displacements:

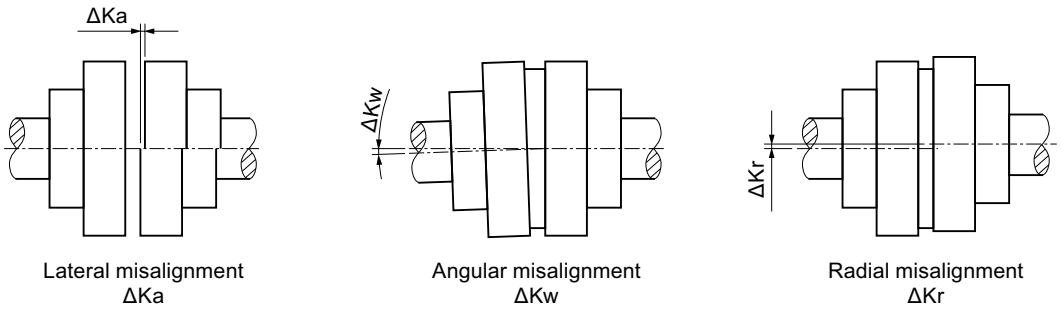

Figure 5-18 Possible displacements

Alignment

Alignment must be carried out in two axis planes that are vertical with respect to one another. This is possible using rulers (radial offset) and feeler gauges (angular offset) as shown in the diagram. You will achieve a greater degree of alignment accuracy by using a dial gauge or laser alignment system.

The diagram below shows the alignment process based on the example of a flexible coupling:

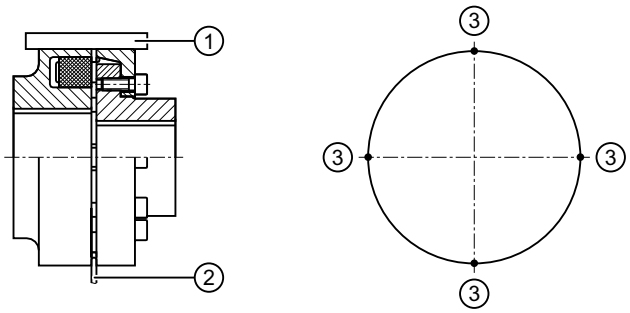

① Ruler
② Feeler gauge
③ Measuring points

Figure 5-19 Alignment process based on the example of a flexible coupling

Note

It is advisable to insert shims or metal sheets under the mounting feet in order to align the drive components in the vertical direction. It is helpful to use support paws with adjusting screws on the foundation to adjust the drive components laterally.

Note

Gear unit with motor bell housing

Couplings do not have to be aligned if the gear unit and motor are connected through a motor bell housing.

Further information

You can find additional information about the permissible alignment errors for Flender couplings in the complete documentation for the gear unit.

If couplings from other manufacturers are to be used, then, specifying the radial loads that occur, ask the manufacturer which alignment errors are permissible.

Hollow output shaft and output flange shaft

There is no need to install the output-side coupling for gear units with a hollow output shaft or flanged output shaft.

5.9 Connecting components

5.9.1 Gear units with mounted components

Depending on the order specification, the gear unit can be equipped with various components.

Connect the closed-loop control and open-loop control electrical devices corresponding to the specifications of the device supplier.

Further information

You can find additional information on operation and maintenance in the associated operating instructions, provided in the complete gear unit documentation.

You can find the technical data of the mounted components in the contract-list of equipment provided in the complete gear unit documentation.

5.9.2 Connecting the cooling coil

Procedure

To connect the cooling coil to the gear unit, proceed as follows:

1. Before connecting the cooling coil, remove the sealing plugs from the connection sleeves.
2. Flush through the cooling coil to remove any dirt or dust.
3. Connect up the cooling water inlet and drain lines. Refer to the dimension drawing for the position of the connections.

Further information

Further information about the cooling coil can be found in the complete documentation for the gear unit.

Note

Observe the information provided in chapter Cooling coils (Page 43).

5.9.3 Connecting the air-oil cooler

Procedure

To connect the air-oil cooler to the gear unit, proceed as follows:

1. Electrically connect the contamination indicator of the double changeover filter and the pressure monitor.
2. Electrically connect the fan motor.

Further information

You can find additional information on the air-oil cooler in the air-oil cooler operating instructions, provided in the complete gear unit documentation.

Note

Observe the information provided in chapter of the Mounted oil supply system with air-oil cooler (Page 44).

5.9.4 Connecting the water-oil cooler

NOTICE
Damage to the water-oil cooler
When installing the piping, it is not permissible that the connections of the water-oil cooler are subject to force, torque or vibration.

Procedure

To connect the water-oil cooler to the gear unit, proceed as follows:

1. Remove the connecting bushes from the cooling water connection before connecting the water-oil cooler.
2. Flush the water-oil cooler to remove any dirt and pollution.
3. Connect up the cooling water inlet and drain lines. Refer to the dimension drawing for the direction of flow and the position of the connections.
4. Electrically connect the pressure monitor (only for appropriately equipped gear units).

Further information

You can find additional information on the water-oil cooler in the water-oil cooler unit operating instructions, provided in the complete gear unit documentation.

Note

Observe the information provided in chapter of the Mounted oil supply system with water-oil cooler (Page 47).

5.9.5 Installing a separate oil supply system

Procedure

To connect the oil supply system to the gear unit, proceed as follows:

1. Remove the dummy flange from the suction and delivery line before connecting the system.
2. Mount the system on the gear unit in accordance with the dimension drawings in the complete documentation, or install it as a separate system.
3. Avoid distorting the piping when installing.

Further information

Further information about the oil supply system can be found in the oil supply system operating instructions in the complete documentation for the gear unit.

5.9.6 Connecting the pressure monitor

For gear units with mounted oil supply system or separate oil supply system, you must connect the pressure monitor so that it functions correctly.

Further information

You can find additional information on pressure monitoring in the pressure monitor operating instructions, provided in the complete gear unit documentation.

5.9.7 Connecting the heating element

Procedure

To connect heating elements to the gear unit, proceed as follows:

1. Check that the heating element connection is not damaged.
2. Install the electrical wiring for the heating elements.

Further information

Further information about the heating can be found in the heating operating instructions in the complete documentation for the gear unit.

5.9.8 Connecting the oil-level monitoring system

Procedure

To connect the oil-level monitoring system to the gear unit, proceed as follows:

1. Ensure that the filling level limit switch connection is not damaged.
2. Electrically connect the filling level limit switch.
3. Connect the signal so that for the "oil level too low" signal, the drive motor cannot start and an alarm is output.
   Bypass this signal in operation.

Further information

Additional information about the oil-level monitoring system can be found in the operating instructions for the oil-level monitoring system components provided in the complete gear unit documentation.

You can find technical data in the separate data sheet and in the equipment list in the complete gear unit documentation.

5.9.9 Connecting the Pt 100 resistance thermometer

Procedure

To connect the Pt 100 resistance thermometer, proceed as follows:

1. Check that the Pt 100 resistance thermometer connection is not damaged.
2. Install the electrical wiring between the Pt 100 resistance thermometer and the evaluation unit. The customer is responsible for providing the evaluation unit.

Further information

Further information about the Pt 100 resistance thermometer can be found in the Pt 100 resistance thermometer operating instructions in the complete documentation for the gear unit.

5.9.10 Connecting a speed encoder

Procedure

To connect the air-oil cooler to the gear unit, proceed as follows:

1. Ensure that the speed encoder connection is not damaged.
2. Electrically connect the speed encoder.

Further information

You can find additional information on the speed encoder in the speed encoder operating instructions, provided in the complete gear unit documentation.

5.9.11 Electrical connections

Procedure



⚠ DANGER

Electric shock

Live parts can cause electric shock.

Ensure that the entire plant is de-energised before starting electrical installation work. Carefully observe the five safety rules (Page 15).

To connect the motors and monitoring devices, proceed as follows:

1. Ensure that the connections of the motors and monitoring devices are not damaged.
2. Connect the motors and monitoring devices according to the terminal diagram.

Further information

You can find additional information about the electrical connections in the terminal diagrams and equipment lists provided in the complete gear unit documentation.

5.10 Tightening procedure

5.10.1 Introduction

Bolts

The bolts must have the following properties:

- Made of steel
- Black-annealed or phosphatised
- Lightly oiled (do not add additional oil)

Note
Replacing bolts

Replace any bolts that are no longer fit for use by bolts of the same type and strength class.

Mating threads

The mating threads must have the following properties:

- Made of steel or cast iron
- Dry, cut threads

Note
Using a lubricant

As a rule, lubricants may not be used, because this can result in the bolt connection becoming overloaded.

5.10.2 Bolt connection classes

In order to affix fastening bolts, note the information in the following table:

Table 5-1 Information on tightening fastening bolts

Mounting	Bolt connection class	Scatter of the torque emitted on the tool	Tightening procedure
Gear unit Motor Brake Torque arm	C	± 5 % to ± 10 %	• Hydraulic tightening with mechanical screwdriver • Torque-controlled tightening with a torque wrench or a signal-emitting torque wrench • Tightening with a precision mechanical screwdriver with dynamic torque measurement
	D	± 10 % to ± 20 %	• Torque-controlled tightening with mechanical screwdriver
Protection cover Sun shield	E	± 20 % to ± 50 %	• Tightening with pulse screwdriver or impact wrench, without adjustment checking device • Tightening by hand, using a wrench without torque measuring device

Further information

You can find additional information about tightening torques when mounting motor and brake in the operating instructions from the particular manufacturer.

5.10.3 Tightening torques and preload forces

The specified bolted connections must be tightened to the torques stated in the table below:

The tightening torques apply to friction values of $\mu_{total} = 0.14$.

The following table lists the preload forces and tightening torques for bolt connections, strength classes 8.8; 10.9; 12.9:

Table 5-2 Preload forces and tightening torques

Nominal thread diameter	Bolt strength class	Preload force for bolt connection classes from the table in chapter Bolt connection classes (Page 116).			Tightening torque for bolt connection classes from the table in chapter Bolt connection classes (Page 116)		
d		C	D	E	C	D	E
mm		$F_{M\ min.}$ N			M_A Nm		
M10	8.8	18 000	11 500	7 200	44.6	38.4	34.3
	10.9	26 400	16 900	10 600	65.4	56.4	50.4
	12.9	30 900	19 800	12 400	76.5	66.0	58.9
M12	8.8	26 300	16 800	10 500	76.7	66.1	59.0
	10.9	38 600	24 700	15 400	113	97.1	86.6
	12.9	45 100	28 900	18 100	132	114	101
M16	8.8	49 300	31 600	19 800	186	160	143
	10.9	72 500	46 400	29 000	273	235	210
	12.9	85 000	54 400	34 000	320	276	246
M20	8.8	77 000	49 200	30 800	364	313	280
	10.9	110 000	70 400	44 000	520	450	400
	12.9	129 000	82 400	51 500	609	525	468
M24	8.8	109 000	69 600	43 500	614	530	470
	10.9	155 000	99 200	62 000	875	755	675
	12.9	181 000	116 000	72 500	1 020	880	790
M30	8.8	170 000	109 000	68 000	1 210	1 040	930
	10.9	243 000	155 000	97 000	1 720	1 480	1 330
	12.9	284 000	182 000	114 000	2 010	1 740	1 550
M36	8.8	246 000	157 000	98 300	2 080	1 790	1 600
	10.9	350 000	224 000	140 000	2 960	2 550	2 280
	12.9	409 000	262 000	164 000	3 460	2 980	2 670
M42	8.8	331 000	212 000	132 000	3 260	2 810	2 510
	10.9	471 000	301 000	188 000	4 640	4 000	3 750
	12.9	551 000	352 000	220 000	5 430	4 680	4 180

Nominal thread diameter	Bolt strength class	Preload force for bolt connection classes from the table in chapter Bolt connection classes (Page 116).			Tightening torque for bolt connection classes from the table in chapter Bolt connection classes (Page 116)		
d		C	D	E	C	D	E
mm		$F_{M\ min.}$ N			M_A Nm		
M48	8.8	421 000	269 000	168 000	4 750	4 090	3 650
	10.9	599 000	383 000	240 000	6 760	5 820	5 200
	12.9	700 000	448 000	280 000	7 900	6 810	6 080
M56	8.8	568 000	363 000	227 000	7 430	6 400	5 710
	10.9	806 000	516 000	323 000	10 500	9 090	8 120
	12.9	944 000	604 000	378 000	12 300	10 600	9 500
M64	8.8	744 000	476 000	298 000	11 000	9 480	8 460
	10.9	1 060 000	676 000	423 000	15 600	13 500	12 000
	12.9	1 240 000	792 000	495 000	18 300	15 800	14 100
M72x6	8.8	944 000	604 000	378 000	15 500	13 400	11 900
	10.9	1 340 000	856 000	535 000	22 000	18 900	16 900
	12.9	1 570 000	1 000 000	628 000	25 800	22 200	19 800
M80x6	8.8	1 190 000	760 000	475 000	21 500	18 500	16 500
	10.9	1 690 000	1 100 000	675 000	30 500	26 400	23 400
	12.9	1 980 000	1 360 000	790 000	35 700	31 400	27 400
M90x6	8.8	1 510 000	968 000	605 000	30 600	26 300	23 500
	10.9	2 150 000	1 380 000	860 000	43 500	37 500	33 400
	12.9	2 520 000	1 600 000	1 010 000	51 000	43 800	39 200
M100x6	8.8	1 880 000	1 200 000	750 000	42 100	36 200	32 300
	10.9	2 670 000	1 710 000	1 070 000	60 000	51 600	46 100
	12.9	3 130 000	2 000 000	1 250 000	70 000	60 400	53 900

5.11 Final work

Measures

Once all the components have been assembled or connected, perform the following final work:

- Check whether all devices dismantled for transportation have been reassembled.
- Check all bolt connections for tightness after installation of the gear unit has been completed.
- Check the alignment after tightening the fastening elements. The alignment must not have changed in any way.
- Lock the oil drain valves against accidental opening.
- Protect the gear unit against falling objects.
- Check that the guards over rotating parts are securely fastened.
  Contact (accidental or deliberate) with rotating parts is not permitted.

- Perform potential equalisation in accordance with the applicable regulations and guidelines. If no threaded holes are available on the gear unit for an earth connection, please take suitable alternative measures. This work must always be done by specialist electricians.
- Protect the cable entries against penetrating moisture.

Further information

Further information about the gear unit and all assembled elements can be found in the operating instructions for assembled elements in the complete documentation for the gear unit.

You can find additional technical specifications in the separate data sheet in the complete gear unit documentation.

Commissioning 6

6.1 Measures prior to commissioning

Take the following measures before commissioning the gear unit:

- Read and observe the operating instructions.
- Replace the screw plug with the air filter or the wet-air filter. Read operating instructions BA 7300 for further information.
- Gear unit with oil retaining pipe: If required, press in grease at the oil retaining pipe.
- Gear units with backstop: Observe the appropriate measures prior to commissioning gear units equipped with backstop.
- Gear unit with auxiliary drive: Observe the appropriate measures prior to commissioning gear units equipped with auxiliary drive.
- Fill the gear unit with oil.
- Gear unit with oil supply system: Check that the oil supply system is working properly.
- Check the oil level.
- Check the gear unit for leaks.
- Gear unit with oil supply system: Observe the appropriate measures prior to commissioning gear units equipped with oil supply system.
- Ensure that all pipes and components are filled with oil.

Further information

Further information about oil and replacement of air filters can be found in the operating instructions BA 7300 in the complete documentation for the gear unit.

Further information about individual components can be found in the operating instructions for the components in the complete documentation for the gear unit.

6.1.1 Gear units with cooling coil

Implement the following measures before commissioning the gear unit with cooling coil:

- Check that connecting pipes are firmly seated and tight.
- Open wide the shutoff valves in the coolant inflow and outflow lines of the coolant system.
- Make sure that the pressure in the cooling coil does not exceed the maximum permissible pressure.
- Make sure that the temperature of the cooling water is not higher than the maximum permissible value.

Further information

Further information about the cooling coil can be found in the separate data sheet and the list of equipment in the complete documentation for the gear unit.

Further information about connection dimensions and cooling water parameters can be found in the gear unit dimensional drawing in the complete documentation for the gear unit.

Further information about the required cooling water flow rate and the maximum permissible inlet temperature can be found in the data sheet and the list of equipment in the complete documentation for the gear unit.

6.1.2 Gear units with oil supply system

Implement the following measures before commissioning the gear unit with oil supply system:

- Ensure that the maximum permissible pressure in the oil supply system components is not exceeded.
- Ensure that the maximum permissible temperature of the oil supply system components is not exceeded.
- Using the oil supply system, lubricate the gear unit for 2 minutes using a pre-lubrication phase. During this time, the rolling-contact bearings and gearing are supplied with sufficient oil for starting.
  Carefully ensure that the pre-lubrication phase is not longer than 5 minutes as the oil can foam up at low temperatures. For oil temperatures below 10 °C, heat up the oil using suitable measures and contact Flender in this regard.

Further information

You can find additional information on the oil cooling system in the separate data sheet, and in the equipment list in the complete gear unit documentation.

6.2 Measures during commissioning

Please observe the following measures to commission the gear unit and document these:

- For gear units with oil supply system: Check that the oil supply system is working properly.
- Check the oil level.
- Measure the oil sump temperature (Page 130) after the gear unit has run in.
- Check that the shaft seal on the gear unit does not leak.
- Check that no contact with rotating parts is possible.
- Check whether the shutoff valves are open.
  - Check that all of the oil drain valves are closed.
  - Ensure that all of the other shutoff valves are open.

- Check all the connection lines are securely tightened and leak-free.
- For gear units with bearing monitoring by measuring the vibration: Measure the vibration levels of the rolling-contact bearings (Page 130) to create initial and comparison values.
- When commissioning, the pressure monitor signal should be bypassed for approximately 20 seconds. This is necessary as the pressure in the gear unit must first stabilise.

Further information

You can find additional information on the topic of oil in the operating instructions BA 7300, provided in the complete gear unit documentation.

Further information about the oil supply system can be found in the oil supply system operating instructions in the complete documentation for the gear unit.

6.2.1 Heating

Please observe the following measures to commission the gear unit with heating:

- Ensure that the heating elements are not exposed.
- Check the switching points of the temperature monitor.

⚠ **WARNING**
The oil sump can catch fire
The oil sump can catch fire if exposed heating elements are switched on.
Never switch on the heating elements until you have checked that they are completely immersed in the oil bath.

Further information

Further information about heating elements can be found in the heating element operating instructions in the complete documentation for the gear unit.

Operation 7

7.1 Operating data

Introduction

To ensure correct, trouble-free operation of the system, observe the operating data of the gear unit. The valid operating data can be found in the annex Technical data.

The following operating data apply to the oil:

Table 7-1 Operating data

Maximum operating temperature	90 °C	is applicable for mineral oil, API groups I or II and saturated synthetic ester
Oil pressure of the oil supply system	> 0.5 bar	



⚠ DANGER

An explosive atmosphere can be ignited

An explosive atmosphere can be ignited by electrostatic discharge.

Do not electrostatically charge the coating. Carefully ensure that highly efficient charge generating mechanisms, which can cause layers and coatings to be electrostatically charged, are reliably avoided.

Further information

You can find additional technical data of the gear unit in the separate data sheet and in the equipment list in the complete gear unit documentation.

7.2 Irregularities in operation

Introduction

Switch off the drive assembly immediately if it exhibits irregular behaviour during operation.

A few irregularities are listed below as examples:

- Oil temperature exceeds the maximum permissible value
- Alarm tripped by the pressure monitor in the oil cooling system or oil supply system
- Unusual operating noise

NOTICE
Faults can cause damage to the gear unit
The gear unit might sustain damage if it is not shut down when a fault occurs.
Switch off the drive assembly immediately if any fault condition develops.

Rectifying irregularities in operation

Proceed as follows to rectify any irregularities in operation:

1. Switch off the drive assembly if it exhibits irregular behaviour during operation.
2. Refer to the Fault information (Page 135) to find the cause of the fault.
3. If you still cannot determine the fault cause, contact Flender Customer Services.



⚠ DANGER
An explosive atmosphere can be ignited
An explosive atmosphere can be ignited if the gear unit overheats as the oil level is too low.
Note the following measures: • Regularly check the gear unit for leaks. • Secure oil drain valves against accidental opening. • Protect any oil sight glasses against damage. • Ensure that, after safety devices respond and before recommissioning, a restart lockout must first be withdrawn.

7.3 Taking the unit out of service

If you take the unit out of service for a prolonged period, you must take the following measures depending on the length of time that the gear unit will remain out of service:

- Switch off the drive assembly.
- For gear units with a cooling coil or a water-oil cooler:
  - Drain the water out of the cooling coil or the water-oil cooler if there is a risk of frost.
  - Close the shutoff valves for the cooling water inlet and drain lines.
- For gear units with an oil supply system, perform the following steps before you preserve the gear unit:
  - Detach the connection between the oil supply system and the gear unit.
  - Seal the openings in the gear unit and oil supply system so that they are air-tight.
- Take measures to preserve the gear unit if it is to be out of service for a prolonged period. Follow the procedure described in operating instructions BA 7300.

Servicing

8

8.1 General maintenance information

The operator must ensure compliance with the stipulated time limits. This also applies if the maintenance activities are included in the operator's internal maintenance schedules.

The gear unit could be damaged if the stipulated time limits for maintenance and servicing are not observed.

The time limits stipulated in the maintenance schedule are largely dependent on the conditions of use of the gear unit. For this reason, it is only possible to state average time limits here. These refer to the following conditions of use:

- Daily operating time 24 h
- Duty cycle "ED" 100%
- Gear unit input speed 1500 rpm
- Permissible average oil temperature (Page 125)



⚠ WARNING

Danger to life due to live system

Working on a gear unit while it is in operation is hazardous and can result in potentially fatal injuries.

Always shut down the gear unit and any oil supply system (whether separate or mounted on the gear unit) before you carry out any work. Take measures to prevent the accidental restarting of the drive assembly. Display a warning notice that clearly states that work is being carried out on the gear unit.

8.2 Maintenance schedule

Maintenance and servicing activities

The following table provides an overview of all maintenance and servicing activities which you are required to perform continuously or at regular intervals.

Table 8-1 Maintenance and servicing activities

Intervals and time limits	Measures
As required	Replace the wet-air filter Clean the air filter Clean the fan and gear unit
Plate on the gear unit, gear unit dimension drawing	Replace the backstop
According to manufacturer's specifications	Check the ignition protection system
Daily	Check the oil temperature Check the oil pressure (if pressure lubrication is fitted) Check for changes in the gear unit noise
Monthly and prior to every start-up	Check for leaks Check the oil level
400 operating hours after commissioning	Check the water content of the oil Change the oil (or depending on results of the oil sample test) Check that all of the fastening bolts are tight
Every 3 months	Check the speed monitoring of the auxiliary drive Check the auxiliary drive Clean the oil filter Clean the air filter
Every 3 000 operating hours	Measure the vibration levels of the rolling-contact bearings
Every 3 000 operating hours, at least every 6 months	Regrease taconite seals
Every 5 000 operating hours, at least every 10 months	Replenish grease in the oil retaining pipe
Every 12 months	Inspect the hose lines Inspect the shrink disk Check the water content of the oil
Every 10 000 operating hours, at least every 2 years	Change the oil if using mineral oil of API Group I or II or saturated synthetic esters (or depending on the result of the oil sample test) Check the air-oil cooler (the same time as you change the oil) Check the water-oil cooler (the same time as you change the oil)

Intervals and time limits	Measures
Every 2 years	Carry out a general inspection of the gear unit Check the cooling coil Check that all of the fastening bolts are tight Clean the fan and gear unit
Every 20 000 operating hours, at least every 4 years	Change the oil if using semi-synthetic oil of API Group III, PAO or PG oil (or depending on the result of the oil sample test)
6 years after the specified date of manufacture	Change the hoses

Further information

Further information about additional maintenance and servicing activities can be found in the separate data sheet in the complete documentation for the gear unit.

Further information about installed components can be found in the operating instructions for the components in the complete documentation for the gear unit.

8.3 Maintenance and servicing work

Introduction

You can find maintenance and servicing measures relating to gear unit lubrication and preservation, which are not provided in this chapter, in BA 7300 in the complete gear unit documentation.

8.3.1 Cleaning the venting screw

Cleaning interval

For dust deposits, you must clean the venting screw before the minimum interval of 3 months expires.

⚠ CAUTION
Compressed air can cause injuries
There is a risk of eye injury when using compressed air.
Wear suitable safety goggles.

Procedure

Proceed as follows to clean the venting screw:

1. Remove the venting screw.
2. Do not allow foreign matter to enter the gear unit.
3. Wash the venting screw with cleaning solvent or a similar cleaning agent.
4. Dry the venting screw and blow it out using compressed air.

8.3.2 Checking the oil temperature

Damage to the gear unit due to excessively high oil sump temperatures.

The gear unit can sustain damage due to inadequate lubrication if you allow it to operate at oil sump temperatures above the maximum permissible temperature.

Do not operate the gear unit above the maximum permissible oil sump temperature.

Procedure

Proceed as follows to check the oil temperature:

1. Allow the gear unit to reach its normal operating temperature.
2. Operate the gear unit with the maximum driven machine power.
3. Measure the temperature of the oil in the oil sump.
4. Compare the measured value with the maximum permissible oil temperature (Page 125).
5. Immediately stop the gear unit if the maximum permissible oil temperature is exceeded. Contact Flender Customer Services.

8.3.3 Measuring the vibration levels of the rolling-contact bearings

Procedure

Proceed as follows to measure the vibration levels of the rolling-contact bearings:

1. Document the measurement results.
2. Compare the measured values with the comparison values that were documented when commissioning the gear unit.
3. Replace defective rolling-contact bearings.
4. Archive the report together with these instructions.

Further information

You can find additional information on measuring the vibration levels at rolling-contact bearings in the operating instructions of the measurement sensor provided in the complete gear unit documentation.

8.3.4 Replenish grease in the oil retaining pipe

Introduction

Only use grease that has been approved by Flender as specified in BA 7300.

The precise designation of the grease nipple is provided in the complete documentation.

The following diagram shows the lubrication points:

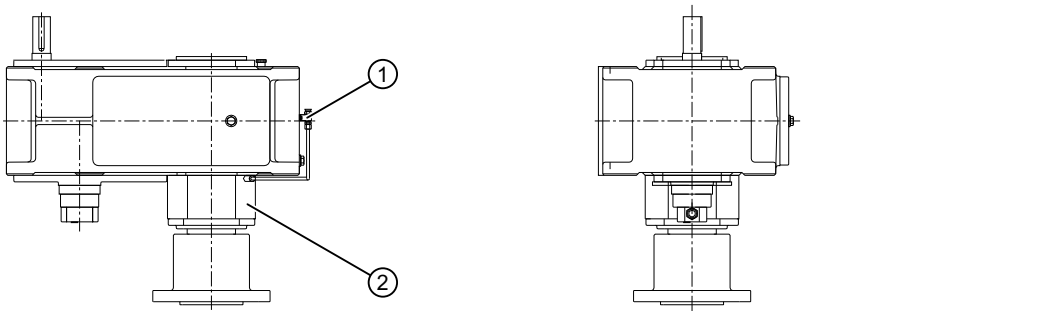

① Lubrication point
② Grease-lubricated rolling-contact bearing

Figure 8-1 Lubrication points

Requirements

Under the following preconditions, before commissioning the gear unit for the first time, you must repack grease:

- Storage extending beyond 6 months
- Storage in a position other than the mounting position

Procedure

Proceed as follows to repack grease in an oil retaining pipe:

1. Clean the grease nipple.
2. Connect the lubrication device to the grease nipple.
3. Press in the specified quantity of lithium soap-based rolling-contact bearing grease.
4. Remove the lubrication device from the grease nipple.

⚠ CAUTION
Risk of slipping as a result of grease that has escaped
There is a danger of slipping if the grease escapes from the oil retaining pipe.
Immediately remove any grease that has escaped from the oil retaining pipe and dispose of it correctly.

8.3.5 Checking the ignition protection system

Procedure

Proceed as follows to check the ignition protection system:

1. Check the ignition protection system for temperature monitoring to ensure that it is functioning correctly.
2. Check the ignition protection system for temperature monitoring for measurement accuracy.

Further information

You can find additional information on checking the ignition protection system in the operating instructions for the ignition protection system, provided in the complete gear unit documentation.

8.3.6 Cleaning the fan and gear unit

Introduction

The gear unit can sustain damage due to inadequate cooling if you operate it with a damaged or soiled fan. Depending on the conditions at the site of installation, it may therefore be necessary to clean the fan and gear unit more frequently than stipulated in the maintenance schedule.

Procedure

Proceed as follows to clean the fan and gear unit:

1. Remove the air guide cover.
2. Use a hard brush to remove any stubborn dirt from the impeller, air guide cover and protective grille. Never use a high-pressure cleaning device.
3. Remove any spots of corrosion.

4. Reinstall the air guide cover.
5. Make sure that the air guide cover is correctly fastened.
   Make sure that there is no contact between the fan and the air guide cover.



⚠ DANGER

An explosive atmosphere can be ignited

An explosive atmosphere can be ignited if the fan and air guide cover come into contact with one another as the cover has been incorrectly attached and sparks are generated.

Make sure that the air guide cover is correctly fastened. It is not permissible that the fan and air guide cover come into contact with one another.



⚠ DANGER

An explosive atmosphere can be ignited

An explosive atmosphere can be ignited if the gear unit overheats as a result of inadequate cooling.

Avoid dust from depositing on the gear unit. Adapt the cleaning intervals to the operational situation.

8.3.7 Checking the cooling coil

Introduction

A soiled cooling coil can cause damage to the gear unit. It is therefore important to check the cooling coil regularly.

Procedure

To check the cooling coil, proceed as follows:

1. Shut off the cooling water supply.
2. Disconnect the cooling water inlet and drain lines from the cooling coil.
3. Inspect the inner surface of the cooling coil for deposits.
4. If you discover that there are heavy deposits inside the cooling coil, arrange for the cooling water or the deposits to be analysed.
   Analysis services of this kind are offered by specialist chemical cleaning companies. These companies also sell special cleaning agents for removing deposits. Before you use a cleaning agent, check whether it is suitable for use on the cooling coil materials. You must consult Flender Customer Services. Carefully read the instructions for use supplied by the manufacturer before using different kinds of cleaning agent.

5. If the cooling coil is severely soiled, it must be replaced by a new one.
   Please consult Flender Customer Services for further advice.
6. Reconnect the cooling water inlet and drain lines to the cooling coil.



⚠ DANGER

An explosive atmosphere can be ignited

An explosive atmosphere can be ignited if the gear unit overheats as a result of inadequate cooling. Heat can no longer be adequately dissipated for very dirty cooling coils.

In this case, clean or replace the cooling coil.

8.3.8 Inspecting the shrink disk

Introduction

The shrink disk inspection is limited to a visual assessment of its condition.

Aspects of the inspection

Observe the following points when inspecting the shrink disk:

- Loose bolts
- Damage due to use of force
- Inner ring resting flush against the outer ring

Further information

Further information about the shrink disk can be found in the shrink disk operating instructions in the complete documentation for the gear unit.

8.3.9 Check that all of the fastening bolts are tight

Procedure

Proceed as follows to check that the fastening bolts are tight:

1. Observe the data regarding connection classes (Page 116), preload forces and tightening torques (Page 117).
2. Replace any bolts that are no longer fit for use by bolts of the same strength class and type.

8.3.10 General inspection of the gear unit

General inspection of the gear unit by Customer Services

Arrange for Flender Customer Services to perform a general inspection on the gear unit.

Thanks to their experience, these engineers are best placed to assess which gear unit components need to be replaced.

8.3.11 Final work

After you have finished all the work listed in the maintenance schedule, replace any bolts that are no longer fit for use by bolts of the same strength class and type.

8.4 Possible faults

The faults listed below are only intended as a troubleshooting guide.

If any faults occur while the unit is still under warranty, do not allow anyone except Flender Customer Services to attempt a repair.

Even after the warranty period has expired, you should still arrange for faults to be rectified by Flender Customer Services.

Note

Loss of warranty

You will invalidate the warranty for the gear unit if you modify it in any way without seeking the approval of Flender beforehand, or if you do not use original spare parts.

Only use original spare parts from Flender. Always arrange for Flender Customer Services to repair any faults that develop while the unit is still under warranty.

Possible faults and their rectification

The following table provides you with an overview of possible faults and indicates how they can be rectified.

Table 8-2 Possible faults and their rectification

Possible faults	Causes	Possible remedies
Pressure monitor triggers an alarm (For gear units with pressure lubrication or air-oil cooler).	Oil pressure < 0.5 bar	• Check the oil level at room temperature • Top up with oil if necessary • Check the oil pump • If required, replace the oil pump • Check the oil filter and coarse filter • If required, replace the oil filter or clean the coarse filter
Grease escaping at the output shaft	Defective rotary shaft sealing rings	• Inspect the rotary shaft seals and replace if necessary
Noise	Damage to gearing	• Contact Customer Services • Inspect toothed components • Replace damaged components if necessary
	The bearing play is excessive.	• Contact Customer Services • Adjust bearing play
	Defective rolling-contact bearings	• Contact Customer Services • Replace defective rolling-contact bearings
	Gear unit fastening has worked loose	• Tighten bolts and nuts to the specified tightening torque • Replace damaged bolts and nuts
Outer surface of gear unit soiled with oil	Inadequate sealing of the housing cover or joints	• Seal housing cover or joints
	Labyrinth seals soiled with oil, incorrect transport position	• Check oil filling • Clean the labyrinths
Main drive motor does not start	Motor direction of rotation incorrect	• Change polarity of motor
	Backstop cage with sprags incorrectly installed or defective	• Contact Customer Services • Install the backstop cage, rotated through 180° - or replace
	Overrunning clutch blocked	• Contact Customer Services • Replace the overrunning clutch
	Overrunning clutch cage with sprags incorrectly installed and/or defective	• Contact Customer Services • Install the overrunning clutch cage, rotated through 180° - or replace
Main drive motor can start while the auxiliary drive is operational	Defective electrical interlocking between the main and auxiliary motor	• Check the connections • If necessary, replace defective devices
	Defective speed monitoring	• Check the connections • If necessary, replace defective devices

Possible faults	Causes	Possible remedies
Auxiliary drive motor does not start	Overload at the output	• Reduce the load at the output
	Defective auxiliary drive motor	• Repair or replace motor
	Motor brake not released	• Correct the electrical connection of the motor brake • If required, replace the motor brake
The auxiliary drive motor starts, the main gear unit output shaft does not turn	Motor direction of rotation incorrect	• Change polarity of motor
	Overrunning clutch cage with sprags incorrectly installed	• Contact Customer Services • Install the overrunning clutch cage, rotated through 180° - or replace
	Defective overrunning clutch	• Contact Customer Services • Replace the overrunning clutch
Leaks	Inadequate sealing of the housing cover or joints	• Seal housing cover or joints
	Labyrinth seals oiled up or transport position incorrect	• Check oil filling • Clean the labyrinths
	Inadequate sealing of the housing cover or joints	• Check the seals • Replace, if necessary • Seal housing cover or joints
	Defective rotary shaft sealing rings	• Check the rotary shaft sealing rings • Replace, if necessary
Oil is foaming in the gear unit	Preservation agent not completely drained off	• Change the oil
	Oil supply system left in operation for too long at low temperatures	• Switch off the oil supply system • Degas the oil
	Gear unit too cold in operation	• Switch off the gear unit • Degas the oil • Start up without cooling water during cold restart
	Water in the oil	• Take test tube sample to examine oil condition for water penetration • Have the oil examined by a chemical lab • Change the oil if necessary
	Oil defoamer has run out	• Examine the oil • Change the oil if necessary
	Unsuitable mixture of oils	• Examine the oil • Change the oil if necessary
Oil escaping from the gear unit	Inadequate sealing of the housing cover or joints	• Check the seals and replace if necessary • Seal housing cover or joints • Check the compression seals and retighten screws if necessary
	Leaking pipes	• Check the pipes, and replace or seal if necessary
Oil supply system malfunction	-	• Read the operating instructions for the oil supply system

Possible faults	Causes	Possible remedies
Oil cooling system fault	-	• Carefully observe the information in the oil cooling system instructions
Elevated temperature during operation	Oil level in the gear unit housing too high	• Check the oil level • Correct the oil level if necessary
	Oil is too old	• Check when the last oil change was done • Change the oil if necessary
	Oil is severely contaminated	• Change the oil
	Oil supply system or cooling coil defective	• Check the oil supply system or cooling coil • Replace defective components if necessary • Read the operating instructions for the oil supply system
	Gear unit with oil cooling system: Cooling liquid flow rate too low or too high	• Fully open the valves in the intake and outlet pipes • Check that water and oil can freely flow through the water-oil cooler
	Gear unit with oil cooling system: The oil flow through the water-oil cooler is too low.	• Check the oil filter and coarse filter • If required, replace the oil filter or clean the coarse filter
	Gear units with cooling coil: Deposits in the cooling coil	• Clean, or if necessary, replace the cooling coil
	For gear units with fan: Air intake opening in air guide cover or gear unit housing is soiled	• Clean the air guide cover and gear unit housing
	Coolant temperature too high	• Check the temperature • Correct the temperature if necessary
	Defective oil pump	• Check the oil pump function • Repair or replace oil pump if required
Elevated temperature at bearing points	Oil level in the gear unit housing too low or too high	• Check the oil level at room temperature • Correct the oil level if necessary
	Oil is too old	• Check when the last oil change was done • Change the oil if necessary
	Oil supply system defective	• Inspect the oil supply system • Replace defective components if necessary • Read the operating instructions for the oil supply system
	Defective rolling-contact bearings	• Contact Customer Services • Inspect the rolling-contact bearings and replace if necessary
Increased backstop temperature with failure of the blocking function	Damaged backstop	• Contact Customer Services • Check the backstop • Replace, if necessary

Possible faults	Causes	Possible remedies
Elevated vibration amplitude at bearing points	Defective rolling-contact bearings	• Contact Customer Services • Inspect the rolling-contact bearings and replace if necessary
	Gear wheels defective	• Contact Customer Services • Inspect the gear wheels and replace if necessary
Contamination indicator of the double change-over filter triggers an alarm	Double change-over filter clogged	• Changeover the double change-over filter corresponding to the separate operating instructions • Clean the filter element
Water in the oil	Oil supply system or cooling coil defective	• Check the oil supply system or cooling coil • Replace defective components if necessary • Read the operating instructions for the oil supply system
	Engine room fan is blowing cold air onto gear unit: Water condenses	• Install suitable thermal insulation to protect gear unit housing • Close the air outlet or change the direction of the air outlet using structural measures.
	Climatic conditions	• Contact Customer Services • Use wet-air filter if necessary
	Oil foams in the oil sump	• Take test tube sample to examine oil condition for water penetration • Have the oil examined by a chemical lab

Service & Support

9

Contact

When ordering spare parts, requesting a customer service technician or in the case of technical queries, please contact our factory or one of our customer service addresses:

Flender GmbH

Am Industriepark 2

46562 Voerde

Germany

Tel.: +49 (0)2871 / 92-0

Fax: +49 (0)2871 / 92-1544

Further information

Further information about service and support can be found on the Internet.

Service & Support (https://www.flender.com/service)

Disposal

10

Disposal of the gear unit

When disposing of the gear unit after its useful life, please observe the following measures:

- Remove operating oil, preservative agents and coolant from the gear unit and dispose of it according to regulations.
- Dispose of the gear unit parts according to applicable national regulations or recycle them.

Environmental protection

Observe the following environmental protection measures for disposal:

- Dispose of or recycle packaging material according to applicable national regulations.
- When changing the oil, collect the used oil in suitable containers. Use oil-binding agents to clean up any oil spillages immediately.
- Store preservative agents separately from used oil.
- Dispose of used oil, preservative agents, oil binding agents and oil-soaked cloths according to the applicable environmental protection regulations.

Spare parts

11

By stocking the most important spare parts at the installation site you can ensure that the gear unit is ready for use at any time.

Note

Damage to the gear unit due to use of unsuitable spare parts

Only use original spare parts from Flender. Flender shall not accept any warranty claims for spare parts that are not supplied by Flender.

Other spare parts are not tested and approved by Flender. Non-approved spare parts may possibly change the design characteristics of the gear unit and thus impair its active or passive safety.

Flender will accept no liability or warranty whatsoever for damage occurring as a result of the use of non-approved spare parts. The same applies to any accessories which were not supplied by Flender.

The contact address of Flender Customer Services can be found under Service & Support.

Information required when ordering spare parts

To order spare parts, refer to the spare-parts list. Only use spare parts from Flender.

When ordering spare parts, please provide the following information:

- Order number with item
- Type and size
- Part number
- Quantity

Declaration of incorporation

A

Declaration of incorporation

Company name and full address of the manufacturer:

Flender GmbH
Am Industriepark 2
46562 Voerde
Deutschland - Germany

Name and address of the person authorised to compile the relevant technical documentation:

Mark Zundel
Flender GmbH
Am Industriepark 2
46562 Voerde
Deutschland - Germany

Description and identification of the partly completed machinery:

Gear unit
H..V, B..V
Sizes 23 to 28
for driving machines

The following "Essential health and safety requirements" of
– Directive 2006/42/EC Official Journal L 157, June 9, 2006, pages 24-86, Annex I,
are applied and complied with:

1.1, 1.1.2, 1.1.3, 1.1.5; 1.2.4.4, 1.2.6; 1.3.1, 1.3.2, 1.3.3, 1.3.4, 1.3.6, 1.3.7, 1.3.8, 1.3.8.1;
1.4.1, 1.4.2.1; 1.5.1, 1.5.2, 1.5.4, 1.5.5, 1.5.6, 1.5.7, 1.5.8, 1.5.9, 1.5.10, 1.5.11, 1.5.13, 1.5.15;
1.6.1, 1.6.2; 1.7.1, 1.7.1.1, 1.7.2, 1.7.4, 1.7.4.1, 1.7.4.2, 1.7.4.3

The special technical documentation as described in Annex VII Part B has been prepared.

The partly completed machinery corresponds to
– Directive 2014/34/EU Official Journal L 96, 29.3.2014, Pages 309-356

The manufacturer undertakes to transmit, in response to a reasoned request by national authorities, the relevant technical documents on the partly completed machinery electronically.

The partly completed machinery must not be put into service until
the final machinery into which it is to be incorporated is
declared to be in conformity with the provisions of Directive 2006/42/EC.

Person authorised to issue this declaration of incorporation on behalf of the manufacturer:

Flender GmbH

Voerde, 2020-06-01

M. Zundel

Mark Zundel, Vice President, Applications Plant Voerde

Original declaration of incorporation

Declaration of conformity

B

EU declaration of conformity

Product:
Gear unit
H..V, B..V
Sizes 23 to 28

Name and address of the manufacturer:
Flender GmbH
Am Industriepark 2
46562 Voerde
Deutschland - Germany

This declaration of conformity is issued under the sole responsibility of the manufacturer.

This declaration refers to the product mentioned above.

The product described above and referred to in the declaration complies with the relevant legal harmonisation regulations of the Union:
– Directive 2014/34/EU Official Journal L 96, 29.3.2014, Pages 309-356

Harmonised standards or other technical specifications,
on which the declaration of conformity is based:

EN 1127-1	: 2019
EN ISO 80079-36	: 2016
EN ISO 80079-37	: 2016
EN IEC 60079-0/AC	: 2020

The notified body, DEKRA Testing and Certification GmbH, ID number 0158, has received the technical documentation.

Signed for and on behalf of:

Flender GmbH

Voerde, 2020-06-01



Mark Zundel, Vice President, Applications Plant Voerde

Technical data

C

C.1 General technical data

Rating plate

The gear unit rating plate contains the most important technical data.

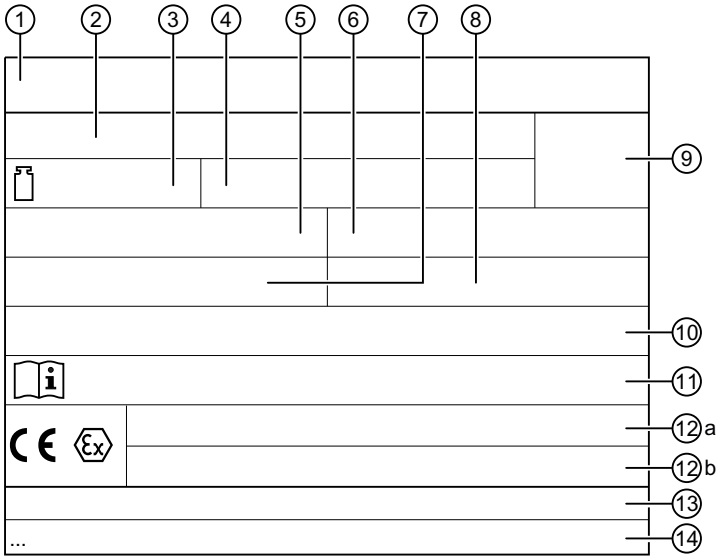

①	Company logo	⑨	Optional DMC (Data Matrix Code)
②	Serial no.: production plant code/order no. item ser. no./year of manufacture	⑩	Oil data: Oil type, oil viscosity, oil quantity
③	Total weight in kg	⑪	Numbers of operating instructions
④	For special information	⑫a	ATEX marking for explosion protection – gas marking
⑤	Type, size	⑫b	ATEX marking for explosion protection – dust marking
⑥	Power rating P_2 in kW or torque T_2 in Nm	⑬	Manufacturer documentation / Country of origin
⑦	Speed n_1	⑭	Hotline
⑧	Speed n_2		

Figure C-1 Rating plate

The limits of the intended use of the gear unit are defined on the basis of these data and the contractual agreements concerning the gear unit concluded between Flender and the customer.

Further information

Further information about these technical data can be found in the separate data sheet and the dimension drawings in the complete documentation for the gear unit.

Further information about all major accessories including their technical data can be found in the order-specific list of equipment in the complete documentation for the gear unit.

Example code

The following is an example of the code printed in line 5 of the rating plate and explains the meaning of the individual letters and numbers.

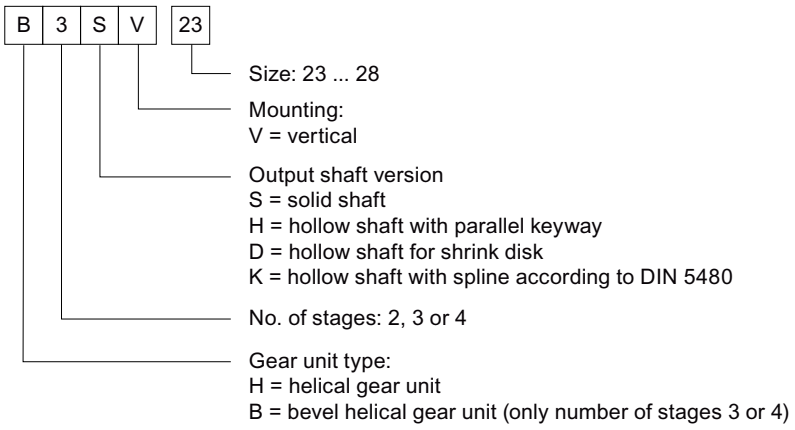

Further information

You can find additional information on the weights and the enveloping surface sound pressure levels in chapters Weights (Page 155) and Enveloping surface sound pressure level (Page 155).

Further information about these technical data can be found in the separate data sheet and the dimension drawings in the complete documentation for the gear unit.

ATEX marking

The ATEX marking for open-cast mining applications is shown in the following table:

Table C-1 ATEX marking

Equipment group	Equipment category	Explosive atmosphere	Explosion group/ dust group	Temperature class	Maximum surface temperature	Marking example
II	2, 3	Gas (G)	IIA, IIB, IIC	T1, T2 T3, T4	-	CE Ex II 2G Ex h IIA T4 Gb -20 °C ≤ T_a ≤ 40 °C
		Gas (G) or Dust (D)	IIA, IIB, IIC	T1, T2 T3, T4	-	CE Ex II 2G Ex h IIA T4 Gb -20 °C ≤ T_a ≤ 40 °C
			IIIA, IIIB, IIIC	-	120 °C, 150 °C, 200 °C	CE Ex II 2D Ex h IIIA T120 °C Db -20 °C ≤ T_a ≤ 40 °C

Please note the following points:

- **Only one** equipment category can be specified.
- **Only one** explosion group can be specified for the gas Ex atmosphere and one dust group for the dust Ex atmosphere.
- **Only one** temperature class can be specified.
- $T_{a\ min.} \leq T_a \leq T_{a\ max.}$ = permissible ambient temperature in °C:
  $T_{a\ min.}$ = minimum permissible ambient temperature
  $T_{a\ max.}$ = maximum permissible ambient temperature
  T_a = ambient temperature code
- The equipment category, explosion group, dust group, temperature class and maximum surface temperatures are specified as examples only.
- The gear unit is not designed for use in hybrid mixtures.

NOTICE
The gear unit can be damaged as a result of incorrect use
The gear unit may be damaged if used for a purpose other than the specified application.
For your particular application, observe the marking on the gear unit rating plate.

C.2 Ambient temperature

The specifications in the ATEX directive are applicable for an ambient temperature range extending from -20 °C up to 40 °C. By applying various suitable measures, the gear unit can be used in the ambient temperature range extending from -40 °C up to 60 °C. However, this must always be authorised by Flender.

In each individual case, the ambient temperature range stamped on the rating plate always applies.

C.3 Types

The gear unit is available in the following types.

H.SV

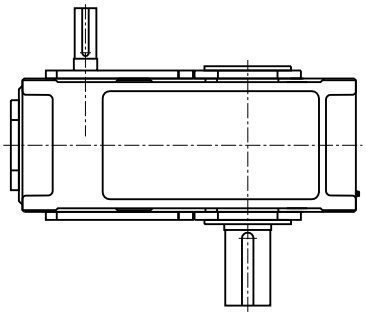

B.SV

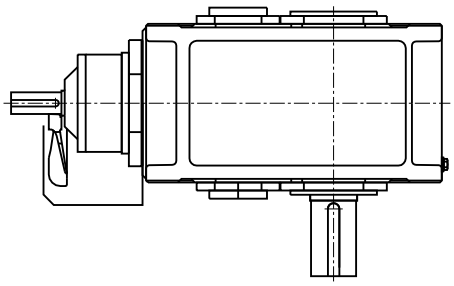

H.HV, H.KV

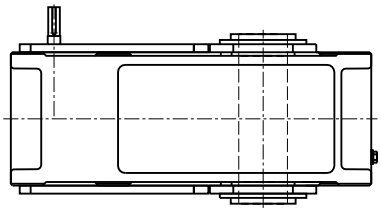

B.HV, B.KV

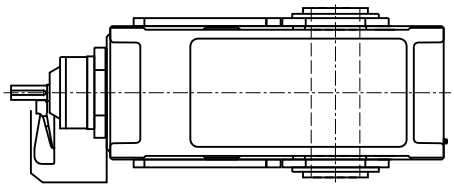

H.DV

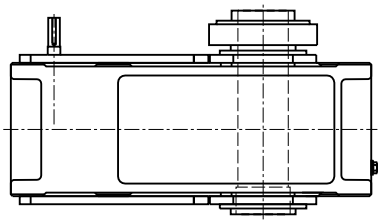

B.DV

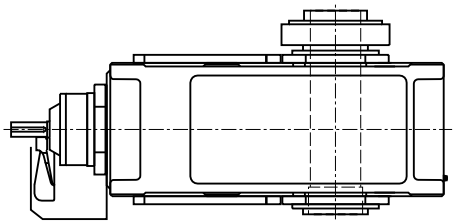

C.4 Weights

The precise weights are specified in the dimension drawings in the complete documentation or on the rating plate.

All weight specifications refer to units without oil filling or mounted components.

C.5 Enveloping surface sound pressure level

The gear unit has an enveloping surface sound pressure level at a distance of 1 m away, which can be taken from the following table.

The measurement is performed using the sound-intensity method according to DIN EN ISO 9614 Part 2.

The workplace of operating personnel is defined as the area on the measuring surface at a distance of 1 m around the gear unit and in the vicinity where persons may be present.

The sound pressure level applies to a gear unit in the warm condition at an input speed n_1 and output power P_2 according to the rating plate, for measurements carried out on a Flender test bench. If several values are given, then the highest speed and power values apply.

The enveloping surface sound pressure level includes any mounted lubrication units. With outgoing and incoming pipes, the flange is considered to be the interface.

The sound pressure levels listed in the table were obtained based on statistical evaluations carried out by our Quality Control department. With statistical certainty, it can be assumed that the gear unit complies with these sound pressure levels.

Refer to the following table for the enveloping surface sound pressure level L_{pA} in dB(A) for bevel helical gear units with fan.

Table C-2 Enveloping surface sound pressure level

Type	i_N	n_1 in rpm	Gear unit size			
			23	24	25	26
B3	20 - 31.5	1000	89	90	91	-
		750	82	84	85	85
	35.5 - 56	1000	86	87	88	89
		750	80	81	82	82
	63 - 80	1000	84	85	86	86
		750	78	79	79	80

You can obtain information about the enveloping surface sound pressure levels for gear unit sizes 27 and 28 on request.

Refer to the following table for the enveloping surface sound pressure level L_{pA} in dB(A) for bevel helical gear units without fan.

Table C-3 Enveloping surface sound pressure level

Type	i_N	n_1 in rpm	Gear unit size			
			23	24	25	26
B3	20 - 31.5	1000	88	89	90	-
		750	81	82	83	84
	35.5 - 56	1000	84	85	86	87
		750	78	80	80	80
	63 - 80	1000	81	81	83	83
		750	74	75	76	76
B4	80 - 125	1500	87	88	87	89
		1000	81	82	82	83
		750	74	75	75	76
	140 - 224	1500	83	84	85	86
		1000	78	78	79	80
		750	71	72	73	73
	250 - 355	1500	80	80	81	82
		1000	74	75	76	77
		750	67	68	69	70

You can obtain information about the enveloping surface sound pressure levels for gear unit sizes 27 and 28 on request.

Refer to the following table for the enveloping surface sound pressure level L_{pA} in dB(A) for helical gear units with fan.

Table C-4 Enveloping surface sound pressure level

Type	i_N	n_1 in rpm	Gear unit size			
			23	24	25	26
H2	6.3 - 10	750	86	-	-	-
	11.2 - 16	1000	88	88	-	-
		750	83	84	84	85
	18 - 22.4	1000	86	87	-	-
		750	82	82	82	83

You can obtain information about the enveloping surface sound pressure levels for gear unit sizes 27 and 28 on request.

Refer to the following table for the enveloping surface sound pressure level L_{pA} in dB(A) for helical gear units without fan.

Table C-5 Enveloping surface sound pressure level

Type	**i_N**	**n_1 in rpm**	**Gear unit size**			
			23	**24**	**25**	**26**
H2	6.3 - 10	750	81	-	-	-
	11.2 - 16	1000	83	83	-	-
		750	79	80	81	81
	18 - 22.4	1000	80	81	-	-
		750	77	77	78	78
H3	22.4 - 31.5	1000	81	82	83	83
		750	78	79	79	80
	35.5 - 63	1500	84	84	-	-
		1000	79	79	80	80
		750	76	76	77	77
	71 - 100	1500	81	82	82	83
		1000	76	77	77	78
		750	73	73	74	75
H4	100 - 140	1500	79	80	81	81
		1000	74	76	76	77
		750	71	72	73	73
	160 - 250	1500	76	78	78	79
		1000	72	73	74	74
		750	68	70	70	71
	280 - 400	1500	74	75	76	76
		1000	69	70	71	72
		750	65	67	68	68

You can obtain information about the enveloping surface sound pressure levels for gear unit sizes 27 and 28 on request.

Index

A

Aerator gear unit, 29
Agitator gear unit, 24
Air-oil cooler, 45, 46
  Principle of operation, 44
Alignment
  Alignment surface, 81
  Prealignment, 81
ATEX Directive, 11
Attachment points, 71

B

Bearing monitoring
  Acceleration sensor, 59
  Resistance thermometer, 55
  Shock-pulse transducer, 57

C

Centrifugal disk, 40
Check that the
  fastening bolts are tight, 134
Coloured markings, 16
Contact, 141
Cooling, 41
Cooling coil
  Commissioning, 121
  Connecting, 111
  Design, 44
  Principle of operation, 43
Copyright, 12
Coupling, 50
Coupling flange, 32
Customer Services, 141

D

Dip lubrication, 33
Directions of rotation, 23
Disclaimer, 11
Disposal, 143
Documentation landscape, 12
Dry running protection, 37

E

Environmental protection, 143
Equipment features, 25
Eye bolts, 66

F

Fan
  Air guide cover, 42
  Principle of operation, 42
Fastening bolts
  Bolt connection class, 116
  Bolts, 115
  Mating threads, 116
  Preload force, 117
  Tightening procedure, 116
  Tightening torque, 117
Fault, 135
Fault rectification, 136
Filter, 49
Final work, 118
Flange pump, 34

G

Gear unit designs, 23
Gear unit equipment, 26, 28
Gear unit housing, 25
Gear unit markings, 16
General inspection of the gear unit, 135
Grease nipple, 131

H

Heating
  Commissioning, 123
  Connecting the heating element, 113
  Design, 52
  Function, 51
  Heating elements, 51
  Oil level monitoring system, 53
  Temperature monitor, 52

I

Interval, 128
Irregularities in operation, 125

L

Lateral pulling, 66
Lubricant, 12
Lubrication point, 26

M

Maintenance activities, 128
Maintenance information, 127
Maintenance schedule, 128
Measures
during commissioning, 122
Prior to commissioning, 121
Motor pump, 35
Mounting flange, 31
Mounting position, 71

N

Note about assembly, 71

O

Oil, 12
Oil expansion unit, 26, 33
Oil level indicator, 53
Oil level monitoring system
Connecting the filling level limit switch, 114
Filling level limit switch, 54
Oil retaining pipe, 40
Replenishing grease, 131
Oil supply, 33
Oil supply system, 28, 33, 34, 35, 45, 46, 47, 48, 49
Air-oil cooler, 44
Commissioning, 122
Oil supply variants, 33
Oil temperature
Checking, 130
Oil temperature monitoring
Connecting the resistance thermometer, 114
Design, 55
Resistance thermometer, 54
Operating data, 125
Oil, 125
Ordering spare parts, 141, 145
Output shaft versions, 24

P

Pressure lubrication, 33
Pressure monitor, 49
Pressure monitoring, 49
Protective equipment, 18
Pump, 49

R

Rating plate, 151
Example of type and size, 152
Reactivating, 22
Rolling-contact bearings
Grease filling, 68
Measuring the vibration levels, 130
Rotary shaft sealing ring, 36

S

Safety rules, 15
Scope of delivery, 63
Servicing activities, 128
Shaft bearings, 36
Shaft seal, 36
Shaft-mounted gear unit
Assembly, 90
Auxiliary plate, 96
Axial locking, 93, 100
Dismantling, 94
End plate, 95, 96
Hydraulic pulling equipment, 96
Maximum forcing pressures, 97
Threaded holes, 96
Shear pulling, 66
Shipping documents, 63
Shrink disk
Checking, 134
Speed encoder, 61
Connecting, 114

T

Taconite seal, 37
Taking the unit out of service, 126

Technical data, 151
Temperature control valve, 46
Transport information, 63
Transport symbols, 65
Troubleshooting, 135
Types of danger, 18

U

Unpacking, 73
Used oil, 143
Using the gear unit, 21

V

Venting screw
    Cleaning, 129

W

Warning symbols, 17
Water-oil cooler, 47, 48

FLENDER GEAR UNITS

Gear unit
Assembly and operating instructions 5091en
Edition 06/2020

Flender GmbH
Alfred-Flender-Straße 77
46395 Bocholt
GERMANY

FLENDER