FLENDER GEAR UNITS

Girth gear units for tube mills

Assembly and machine instructions A5150-01en
Version 10/2023

DMG2 18, 22, 25,4, 30
DMG3 18, 22, 25,4

flender.com

FLENDER

Original assembly and machine instructions

A5150-01
Version 10/2023

Copyright (©2023 Flender GmbH)

V4
23/11/2023
15:39:37

Table of contents

1 Introduction 11

1.1 Naming convention 11

1.2 Legal information 11

1.3 General information 12

1.4 Lubricants 14

2 Safety instructions 15

2.1 Security notes 15

2.2 The five safety rules 15

2.3 General information 15

2.4 General warnings and symbols 17

2.5 Special types of danger and personal protective equipment 17

2.6 Intended use 20

3 Description 23

3.1 General description 23

3.2 Oil supply to the gear unit 23

3.3 Bearing arrangement of the shafts 24

3.4 Shaft seal 24

3.4.1 Introduction 24

3.4.2 Rotary shaft sealing rings 24

3.4.3 Labyrinth seals 24

3.5 Couplings 24

3.6 Bearing monitoring 25

3.6.1 Bearing monitoring using a Pt 100 resistance thermometer 25

3.7 Inductive sensor at the intermediate shaft 25

4 Application planning 27

4.1 Scope of delivery 27

4.2 Transport 27

4.3 Attachment points 29

4.4 Special aspects of gear unit lubrication and preservation 30

4.4.1 Preservation 30

5 Assembly 31

5.1 General assembly instructions 31

5.2 Unpacking the gear unit 33

5.3 Preparatory measures for mounting the gear unit 34
5.3.1 Checking the girth gear 34
5.3.2 Determining the centre of the girth gear 35
5.3.3 Checking the foundation 36

5.4 Mounting the baseplate 36
5.4.1 Tightening procedure 39
5.4.1.1 Properties of the bolts and mating threads 39

5.5 Mounting the gear unit 40
5.5.1 Fastening foundation bolts 42

5.6 Couplings 43
5.6.1 Assembling the coupling 44
5.6.2 Aligning the coupling 45

5.7 Connecting components 47
5.7.1 Making terminal box connections for pre-wired gear units 47
5.7.2 Installing a separate oil supply system 47
5.7.3 Connecting the resistance thermometer 48
5.7.4 Electrical connections 48

5.8 Final work 49

6 Commissioning 51

6.1 General warning notes on commissioning 51

6.2 Measures prior to commissioning 51
6.2.1 Flushing before first commissioning 52
6.2.2 Adjusting the inductive sensor 53
6.2.3 Gear unit with oil supply system 55
6.2.4 Checking procedure 55

6.3 Measures during commissioning 56
6.3.1 Initial test run 57

7 Operation 59

7.1 Operating data 59

7.2 Irregularities in operation 59

7.3 Taking the unit out of service 60

8 Maintenance 61

8.1 General maintenance information 61

8.2 Maintenance schedule 61
8.3 Maintenance and servicing work 63
8.3.1 Contamination limits 63
8.3.2 Servicing 64
8.3.3 Measuring the temperature at the rolling-contact bearings 64
8.3.4 Cleaning the gear unit 64
8.3.5 Check that all of the fastening bolts are tight 65
8.3.6 Retrofitting components 65
8.3.7 General inspection of the gear unit 65
8.3.8 Final work 65
8.4 Possible faults 65

9 Service & Support 69
9.1 Contact 69

10 Disposal 71

11 Spare parts 73

A Declaration of incorporation 75
A.1 Declaration of Incorporation 75

B Technical data 77
B.1 Technical representation 77
B.2 General technical data 79
B.3 Ambient temperature 80
B.4 Weights 80
B.5 Enveloping surface sound pressure level 81
B.6 Terminal diagram 81

C Checklist for maintenance and servicing 83

Index 85

List of tables

Table 2-1	Symbols and markings	16
Table 2-2	General warnings	17
Table 4-1	Transport conditions	28
Table 5-1	Tools for assembling DMG2 and DMG3 gear units	32
Table 5-2	Permissible radial and axial runout of girth gears	35
Table 5-3	Parts required to assemble the baseplate	37
Table 5-4	Technical data of the foundation bolts/nuts	43
Table 6-1	Rinsing duration	52
Table 6-2	Permissible axial offsets of the floating shaft from the centre position	54
Table 7-1	Operating values	59
Table 8-1	Maintenance and servicing activities	61
Table 8-2	Possible faults and how to rectify them	66
Table B-1	Dimensions and torques DMG2	77
Table B-2	Dimensions and torques DMG3	78
Table B-3	Weights	81
Table C-1	Check list 1	83

List of figures

Figure 3-1 Inductive sensor at the intermediate shaft 25

Figure 4-1 Transport symbols 28

Figure 4-2 Position of the attachment points for type DMG2 and DMG3 gear units 29

Figure 5-1 Positioning of the dial gauges (A, B, C) on the girth gear 35

Figure 5-2 Foundation drawing 36

Figure 5-3 Assembly drawing 38

Figure 5-4 Gear unit assembly 40

Figure 5-5 Possible misalignment 46

Figure 5-6 Alignment, based on the example of a flexible coupling 46

Figure 6-1 Inductive sensor at the intermediate shaft 53

Figure 6-2 Example of floating shaft for gear unit type DMG2 25.4 55

Figure B-1 Dimensions 77

Figure B-2 Rating plate 79

Figure B-3 Structure of gear unit markings 80

Introduction 1

1.1 Naming convention

This girth gear unit is referred to below as “gear unit”.

1.2 Legal information

Warning system

These instructions contain information you must observe for your own personal safety as well as to avoid damage to property and persons. The information regarding your personal safety is highlighted with a warning triangle. Information exclusively regarding property damage alone is not marked with a warning triangle. Depending on the hazard class, the warnings shall be depicted as follows, in descending order.

⚠ DANGER
means that death or severe physical injury **will** occur if the relevant precautionary measures are not taken.

⚠ WARNING
means that death or severe physical injury **may** occur if the relevant precautionary measures are not taken.

⚠ CAUTION
means that mild physical injury may occur if the relevant precautionary measures are not taken.

NOTE
means that damage to property may occur if the relevant precautionary measures are not taken.

If multiple hazard classes come into play, the warning for the highest level in question shall always be used. If a warning containing the warning triangle warns of harm to individuals, the same warning may also include a warning regarding damage to property.

Information

Information

Information offers additional notes, assistance and tips for handling the product.

Qualified personnel

The product/system associated with this documentation may only be used by **qualified personnel** trained to perform the relevant tasks, taking into account the associated documentation for the relevant tasks, particularly the safety information and warnings included therein. Due to their qualification and experience, qualified personnel are capable of detecting risks and avoiding potential hazards when dealing with these products/systems.

Intended use of Flender products

Please note the following:

⚠ WARNING

Flender products are only suitable for the uses set out in the catalogue and associated technical documentation. If third-party products and components are used, these must be recommended and/or authorised by Flender. Safe and flawless operation of the products requires proper transport, proper storage, setup, assembly, installation, commissioning, operation and maintenance. The permissible environmental conditions must be adhered to. Instructions in the associated documentation must be followed.

Trademarks

All designations marked with the trademark symbol ® are registered trademarks of Flender GmbH. Other designations in this document may be trademarks whose use by third parties for their own purposes may violate the rights of the owner.

Liability disclaimer

We have assessed the contents of these instructions for compliance with the hardware and software described. However, deviations cannot be ruled out, so we are unable to accept liability for full compliance. The details in these instructions are regularly reviewed and necessary corrections are contained in subsequent editions.

1.3 General information

Purpose of these instructions

These instructions describe the gear unit and provide information about its handling – from assembly to maintenance.

Please keep these instructions for later use. Please read these instructions prior to handling the gear unit and observe the information they contain.

Information

Liability disclaimer

Please make sure that every person who is commissioned to work on the gear unit has read and understood these instructions prior to handling the gear unit and adheres to all of the points. Non-adherence to the instructions can cause product or property damage or personal injury.

Flender accepts no liability for damages and disruption to operations that result from non-adherence to the instructions.

The described gear unit represents the state of the art at the time these instructions were printed.

In the interest of further development, Flender reserves the right to make such changes to the individual assembly units and accessories that increase performance and safety whilst maintaining the essential features.

Required basic knowledge

In order to understand these instructions, you will need the following general knowledge about gear units. You will also need a basic understanding of the following topics:

- Application planning
- Assembly
- Commissioning
- Maintenance

Documentation landscape

These instructions are part of the delivery of your gear unit.

These instructions form part of the complete documentation supplied with the gear unit. The complete documentation encompasses other documents, including:

- Data sheet
- List of equipment
- Dimension drawing
- Instructions 7300 on gear unit lubrication and preservation
- Instructions for mounted components
- Instructions for third-party devices

Copyright

The copyright of these instructions is held by Flender.

Without the authorisation of Flender, these instructions may not be used wholly or in parts for competitors' purposes or be given to third parties.

If you have any technical queries, please contact the Customer Services address (Page 69).

1.4 Lubricants

The quality of the oil used must meet the requirements of the Instructions 7300, which is provided as a separate item, otherwise the warranty provided by Flender will be void. Flender urgently recommends that one of the oil types listed in Instructions 7300, which have been appropriately tested and comply with the requirements, is used.

To avoid misunderstandings, Flender points out that, by making this recommendation, it is not approving the product in the sense of expressing a warranty for the quality of the lubricant supplied by your supplier. Every lubricant manufacturer is required to guarantee the quality of their products.

Information such as oil type, oil viscosity and required oil quantity can be found on the rating plate of the gear unit and in the documentation supplied with the gear unit.

The oil quantity specified on the rating plate is an approximate value. The actual quantity of oil required is determined by the marking on the oil dipstick or oil sight glass.

The instructions for the current lubricant recommendations of Flender can also be viewed on the Internet (https://www.flender.com/lubricants).

The oils listed there undergo continuous testing. As a result, the recommended oil types might in future be removed from the list or replaced by more advanced oils.

Flender recommends regular inspection to ascertain whether the selected lubricating oil is still approved by Flender. If it is not, another brand of oil should be selected instead.

Safety instructions 2

2.1 Security notes

Flender offers products and solutions with industrial security functions, which support the safe and secure operation of plants, systems, machines and networks.

In order to safeguard plants, systems, machines and networks against cyber threats it is necessary to implement (and continually maintain) a holistic industrial security concept that corresponds to the current state of the art. Flender products and solutions undergo continuous development in this respect.

Customers are responsible for preventing unauthorised access to their plants, systems, machines and networks. These systems, machines and components shall be connected to the company network or the Internet only when and to the extent that this is absolutely necessary and appropriate protective measures (e.g. firewalls and/or network segmentation) shall be taken.

You can find further information about possible protection measures as part of Industrial Security in the following international series of standards, for example: IEC 62443 "Network and system security".

Flender products and solutions undergo continuous development in order to make them even safer. Flender strongly recommends that you regularly implement product updates as soon as they become available and that you only use the current product versions. Use of older or no longer supported versions can increase the risk of cyber threats.

2.2 The five safety rules

In order to protect yourself and prevent any damage to property, always observe the safety relevant information and the following five safety rules (as per EN 50110-1 "Working on isolated equipment") when working on electrical components of the plant.

Prior to starting work on the machine, follow the safety rules listed below:

1. Disconnect
   Also disconnect auxiliary circuits such as the anti-condensation heater
2. Safeguard against restart
3. Ensure that the system is de-energised
4. Earth and short circuit
5. Cover or cordon off adjacent live parts

When all the work is complete, cancel the safety measures in the reverse sequence.

2.3 General information

Introduction

All work on the gear unit should be performed with care and only by qualified personnel.

Symbols on the gear unit

The following symbols apply to the gear unit; some of which are found as coloured markings on the gear unit:

Points labelled on the gear unit	**Symbol**	**Coloured markings**
Earth connection point		
Air relief point		yellow
Oil filling point		yellow
Oil draining point		white
Oil level indicator		red
Oil level measurement		red
Oil overflow		
Connection point for vibration monitoring		
Lubrication point		red
Apply grease		
Lifting eye		
Eye bolt		
Do not unscrew		
Alignment surface, horizontal		
Alignment surface, vertical		
These symbols indicate the oil level checking procedure using the oil dipstick.	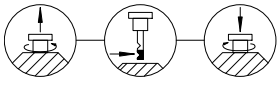	

Points labelled on the gear unit	Symbol	Coloured markings
These symbols indicate that the oil dip-stick must be firmly screwed in.	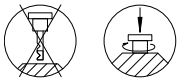	

Table 2-1: Symbols and markings

2.4 General warnings and symbols

The following table contains general warnings and their associated symbols.

ISO	ANSI	Warning
		Warning – hazardous electrical voltage
		Warning – explosive substances
	---	Warning – entanglement hazard
	---	Warning – hot surfaces
	---	Warning – corrosive substances
	---	Warning – suspended load
	---	Warning – hand injuries

Table 2-2: General warnings

2.5 Special types of danger and personal protective equipment

Requirements

Fulfil the following requirements before commencing work on the gear unit:

- Ensure that the oil pressure lines are depressurised.
- Only perform work on the gear unit when it is not in operation.
- Disconnect electrical systems from the power supply.



⚠ DANGER

Electric shock

Live parts can cause electric shock.

Ensure that the entire plant is de-energised before starting electrical installation work.

Protective equipment

Wear the following personal protective equipment when handling the gear unit:

- Safety shoes
- Overalls
- Helmet
- Safety gloves
- Safety goggles

⚠ WARNING

Risk of eye injury

Small foreign particles such as sand or dust can enter the cover plates of the rotating parts and be hurled back by them.

Wear safety goggles.

Dangers during operation

Damage to the gear unit is possible.

Switch the gear unit to standstill immediately if inexplicable changes are noticed during operation. Such changes may include unusual gear unit noise or a significant increase in operating temperature.

⚠ WARNING

Risk of falling

There is an increased risk of falling when standing or walking on the gear unit during operation.

Only walk or stand on the gear unit and its mounted components for maintenance and repair work when it is at a standstill. Do not walk or stand on shaft ends, protection covers, mounted components or pipes.



⚠ WARNING

Danger to life through rotating or moving parts

There is danger that rotating or moving parts may catch hold of you or pull you in.

Secure rotating and/or moving parts against contact using safeguards.

Surface temperature

The surface temperatures of the gear unit can become very extreme depending on the operating conditions.



⚠ WARNING

Risk of burns

Possible risk of serious burn injury from hot surfaces (> 55 °C).

Wear suitable protective gloves and protective clothing.

⚠ WARNING

Risk of scalding

Risk of serious injury possible through escaping hot operating media when these are being changed.

Wear suitable protective gloves, safety goggles and protective clothing.

⚠ WARNING

Danger due to low temperatures

Possible risk of serious injuries due to frost (pain, numbness, frostbite) on cold surfaces (< 0 °C).

Wear suitable protective gloves and protective clothing.

Chemical substances

Injuries can be sustained when using chemical substances.



⚠ WARNING

Risk of chemical burns due to chemical substances

There is a risk of chemical burns when handling aggressive cleaning agents.

Please observe the manufacturer's guidelines on how to handle cleaning agents and solvents. Wear suitable protective equipment (gloves, safety goggles). Please use binding agents to immediately clear up any spilt solvent.

⚠ CAUTION

Risk of injury due to chemically aggressive operating materials

There is a risk of injury to eyes and hands when handling chemically aggressive operating materials.

Please observe the safety instructions in the data sheets of the oil used. Wear suitable protective equipment (gloves, safety goggles). Use an oil-binding agent to immediately clean up spilt oil.

Danger of explosion

An explosion may occur in a potentially explosive atmosphere.



⚠ DANGER

Danger of explosion through ignition of a potentially explosive atmosphere

Danger to life through ignition of a potentially explosive atmosphere possible when operating the gear unit

Do not use the gear unit in potentially explosive atmospheres.

2.6 Intended use

Only use the gear unit according to the conditions specified in the service and delivery contract and the technical data in the Annex (Page 77). Deviating operating conditions are considered improper use. The user or operator of the machine or system is solely liable for any resulting damage.

When using the gear unit, please specifically observe the following:

- Do not make any modifications to the gear unit which go beyond the permissible handling described in these instructions. This also applies to the guards designed to prevent accidental contact.
- Only ever use original replacement parts.
  - Other replacement parts are not tested and approved by Flender. Non-approved replacement parts may possibly change the design characteristics of the gear unit and thus impair its active or passive safety.
  - Flender will accept no liability or warranty whatsoever for damage occurring as a result of the use of non-approved replacement parts. The same applies to any accessories which were not supplied by Flender.

If you have any questions, please contact Customer Service (Page 69).

⚠ WARNING

Risk of falling

Risk of serious injury through falling.

Only walk or stand on the gear unit for maintenance and repair work when it is at a standstill. Do not walk or stand on shaft ends, protective covers, mounted components or pipework.

Using the gear unit

When using the gear unit, please observe the following basic rules:

- Ensure that the gear unit is operationally safe.
- The gear unit must only be operated, maintained and repaired by authorised, trained, instructed and qualified personnel.

- The relevant occupational safety and environmental protection provisions must be taken into account in transport, assembly and dismantling, operation, servicing and maintenance.
- Cleaning the outside of the gear unit with a high-pressure cleaning device is not permitted.
- Do not perform any welding work anywhere on the gear unit or connected parts. Do not use the gear unit or connected parts as an earthing point for electric-welding operations. Gear parts and rolling-contact bearings may be irreparably damaged by welding.
- Perform potential equalisation in accordance with the applicable regulations and directives.
  If there are no threaded holes on the gear unit for an earth connection, other suitable measures must be taken. This work must be carried out by specialists in electrical engineering.
- In the case of gear units that are operated in combination with electrical machines that generate current or through which current flows (e.g. motors and generators), take measures to ensure that no current can flow through the gear unit.
  Current flowing through the gear unit can result in irreparable damage to rolling-contact bearings and gears. Short circuits, voltage flashovers and deposits of conductive dust, for example, can all allow current to flow.
  Use insulators and earth the gear unit properly.
- When removing any guards, store their fixings in a safe place.
- Removed guards must be re-fitted prior to starting.
- Observe the notices mounted on the gear unit, e.g. rating plate, direction of rotation arrow symbol, etc. The notices must be kept free from paint or dirt. Replace missing plates.
- Screws which have become unusable during assembly and dismantling must be replaced with new screws of the same strength class and design.

⚠ DANGER

Danger to life when the system is switched on

Death or serious injury will occur.

Always shut down the gear unit and any oil supply system (whether separate or attached to the gear unit) before you perform any work. Secure the drive aggregate against being operated accidentally as follows:

- Turn off the key-operated switch.
- Remove the fuses in the power supply.
- Attach an information notice to the start switch, clearly stating that work is being carried out on the gear unit.
- Ensure that the tube mill has settled and come to a complete stop, and secure it using a holding brake.
- Ensure that the entire system is not under a load to avoid danger during dismantling work.

Integrating the gear unit

When integrating the gear unit in machines or systems, the machine or system manufacturer is obliged to include the provisions, instructions and descriptions contained in this set of instructions in their instructions.

Description 3

3.1 General description

The gear unit described in these instructions has been developed to drive tube mills. Potential applications for this series of gear units include, for example, the cement and ore processing industries.

The gear unit is supplied as a load-sharing helical gear unit. The housing is not closed.

The shafts of the last stages each have an output pinion. These two output pinions mesh directly in the girth gear and are designed so that they can compensate any unavoidable inclination and offset motion of the girth gear. This allows the gears to mesh over most of the gear width during operation.

The gear unit input shaft extends out at both sides.

3.2 Oil supply to the gear unit

The gears as well as the rolling-contact bearings are force lubricated using an oil supply system. A piping system in the gear unit feeds and distributes the lubricant to the individual lubrication points. The nozzles and throttles used have large free cross-sections, and consequentially have a low tendency to clog up.

⚠ WARNING

Defective pressure monitor

Risk of serious injury possible due to a defective pressure monitor.

- Install two pressure monitors with two switching points in the oil feeder line to the gear unit.
- DMG2 18
  DMG3 18:
  An alarm is issued from a pressure < 0.8 bar.
  A pressure < 0.5 bar leads to the gear unit being switched off.
- DMG2 22; DMG2 25.4; DMG2 30
  DMG3 22; DMG3 25.4:
  An alarm is issued from a pressure < 1.3 bar.
  A pressure < 1.0 bar leads to the gear unit being switched off.

Further information

If the oil supply system is included in the scope of delivery, you can find further information and a detailed diagram of the oil supply system in the foundation drawing in the complete documentation for the gear unit.

You can find further information about the oil supply system in the separate data sheet, in the list of equipment or in the instructions for the oil supply system that are provided in the complete documentation for the gear unit.

3.3 Bearing arrangement of the shafts

All shafts are mounted on rolling-contact bearings.

3.4 Shaft seal

3.4.1 Introduction

Depending on requirements, shaft seals prevent oil from escaping from the gear unit or dirt from entering the gear unit.

The input shafts are sealed using a labyrinth seal and a radial shaft sealing ring.

As the housing at the output is open, this must be connected to the girth gear protective cover so that a tight seal is established.

3.4.2 Rotary shaft sealing rings

The input shaft of the gear unit is fitted with a rotary shaft sealing ring that effectively seals the interior of the delivered gear unit air-tight for the required preservation period. It is not necessary to remove the rotary shaft sealing ring when commissioning the gear unit. The reliability of the shaft seal will not be affected if the rotary shaft sealing ring is no longer capable of fulfilling its sealing function after the unit has been commissioned.

3.4.3 Labyrinth seals

Labyrinth seals as non-contact seals prevent shaft wear. They do not require any maintenance and improve the temperature behaviour of the gear unit.

To work reliably, labyrinth seals must be installed in stationary, horizontal positions without dirty water or any substantial amount of dust. Overfilling the gear unit can result in leaks, the same applies to oil with a high foam content.

3.5 Couplings

Flexible couplings or safety couplings are generally used to drive the gear unit. Other coupling variants must be agreed contractually.

Further information

You can find additional information about the couplings in the coupling instructions provided in the complete gear unit documentation.

3.6 Bearing monitoring

3.6.1 Bearing monitoring using a Pt 100 resistance thermometer

The gear unit is equipped with Pt 100 resistance thermometers for bearing monitoring.

You must connect the Pt 100 resistance thermometers to an evaluation unit supplied by the customer to measure temperatures or temperature differences. The resistance thermometers have a connection head for the wiring or are pre-wired in a terminal box.

Further information

More information, a detailed illustration of the gear unit and the position of the mounted components can be found in the dimension drawing in the complete documentation for the gear unit.

You can find further information about bearing monitoring using a Pt 100 resistance thermometer (such as control instructions) and the technical data in the instructions for the Pt 100 resistance thermometer and in the list of equipment in the complete documentation for the gear unit.

3.7 Inductive sensor at the intermediate shaft

An inductive sensor can be installed at the intermediate shaft if specified in the order.

The inductive sensor and corresponding hardware and software can be used to monitor axial misalignment of the floating shaft when in operation.

The inductive sensor at the intermediate shaft is shown in the following diagram:

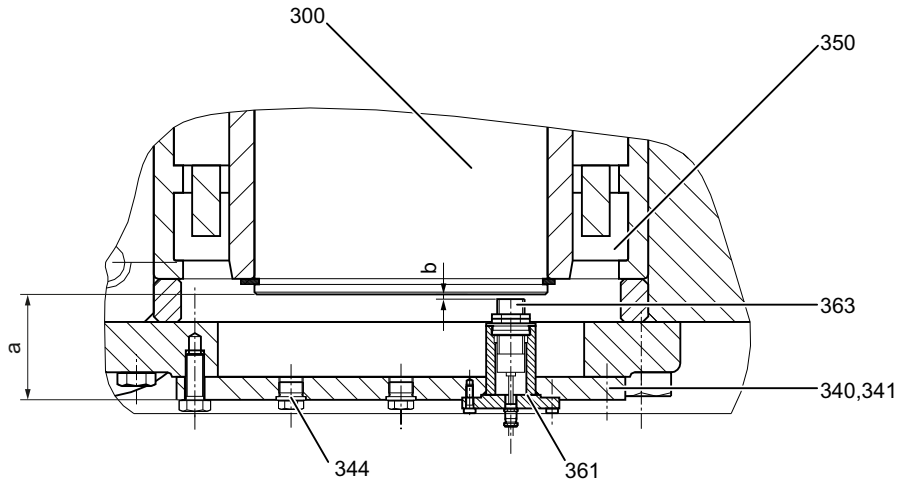

Figure 3-1: Inductive sensor at the intermediate shaft

300 Floating shaft
340 Cover
341 Cover
344 Screw plug
350 Rolling-contact bearings
361 Sensor sleeve
363 Inductive sensor

Application planning 4

4.1 Scope of delivery

The scope of delivery is listed in the shipping documents. Immediately upon receiving the gearbox, check that everything has been delivered. Report any damaged and/or missing parts to Customer Services (Page 69) immediately.

⚠ WARNING

Serious injury through defective product

Serious injury may occur.

If the gearbox exhibits any visible damage, you should not put it into operation.

4.2 Transport

General information

The gear unit is delivered fully assembled. Additional items such as couplings, oil coolers, pipework and valves may be delivered separately packaged, as necessary.

When transporting the gear unit, observe the following instructions to avoid damaging the gear unit:

- The gear unit may only be transported using suitable means of transport.
- Transport the gear unit emptied of oil and leave the gear unit on the transport packaging.
- Do not use incorrect attachment points.
  The threads in the front shaft ends must not be used for attaching lifting equipment.
- Do not use the pipework for moving the gear unit.
- Ensure that the lifting equipment is able to bear the weight of the gear unit plus a safety margin.



⚠ WARNING

Risk of crushing

There is a risk of being crushed by a component that becomes detached because the hoisting gear and load suspension device are not suitable for handling it.

When lifting, please observe the load distribution information on the packaging.

When the product is in a raised position, transport it slowly and carefully to avoid injury to persons or damage to the gear unit.

Attaching the load

For transport, only attach the gear unit at the marked attachment points intended for this purpose.

Ensure the following measures are taken when attaching, lifting, lowering and moving the load:

- Keep within the load limits
- When using loading suspension devices with several load hooks, ensure the load is evenly distributed
- Be aware that the centre of gravity may not be in the centre
- Ensure that lifting equipment is correctly secured
- Move the equipment slowly
- Load sway and attachment of the load to objects or parts of buildings is not permissible
- Load hooks must not be loaded at the tip
- Only set down products on a flat, non-slip and strong base



⚠ DANGER

Falling load

There is a risk of fatal injury from falling loads if these have not been securely attached to the lifting equipment.

Never stand or sit under suspended loads. Do not exceed the load limits of the lifting equipment.

Packaging

The gear unit is delivered fully assembled. Any additional equipment is supplied in separate packaging where applicable.

The way the gear unit is packaged may vary, depending on the transport route and size.

The symbols which appear on the packaging must be observed.

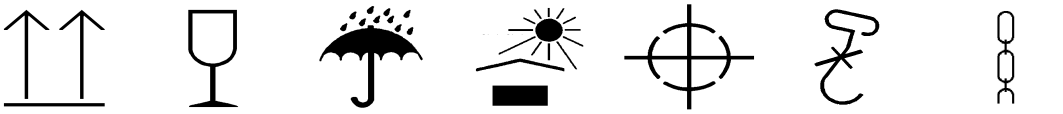

Figure 4-1: Transport symbols

Transport conditions

Carefully note the transport conditions listed in the table when transporting the unit from the factory to the customer's site.

	Gear unit size			
	18	**22**	**25.4**	**30**
Transport vehicle required	Flat-bed trailer			Flat-bed trailer with special flat bed (observe the height)

	Gear unit size			
	18	**22**	**25.4**	**30**
Number of chains required to secure the unit when transporting it	4	4	6	8
Material used for transporting the unit	4 x 10 x 12 cm timber beams attached to the gear unit			-

Table 4-1: Transport conditions

4.3 Attachment points

Lifting eyes

Lifting eyes are fitted to the gear unit to assist with its transportation during manufacture and installation.

Carefully ensure that the angle of the vertical load at the gear units lifting eyes does not exceed 45°.

Position of the attachment points

The diagram below shows the position of the attachment points for type DMG2 and DMG3 gear units:

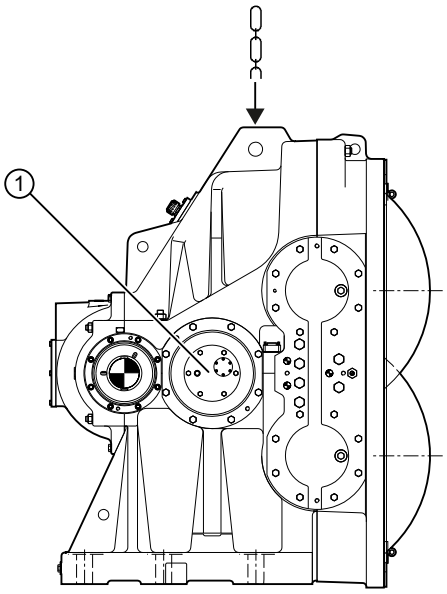

Figure 4-2: Position of the attachment points for type DMG2 and DMG3 gear units

① Transport lock

The floating intermediate shaft of the gear unit is axially held in place using a transport brace.

Store the transport brace so that it can be reused if the unit has to be transported.

Drive units with additional components mounted on the gear unit (such as drive motor, coupling, etc.) may require an extra attachment point owing to the displacement in the centre of gravity caused by the mounted components.

Further information

Further information, a detailed illustration of the gear unit and the position of the attachment points can be found in the dimension drawings in the complete documentation for the gear unit.

4.4 Special aspects of gear unit lubrication and preservation

4.4.1 Preservation

Improper use can damage the gear unit. Take the following precautions to ensure that the preservation remains effective:

- Make sure that the seals for the input shaft remain covered.
- Make sure that the protective cover (transport cover) remains mounted on the module gear unit.

NOTE

Damage to gear unit caused by corrosion

Exposing the gear unit to moisture can result in damage from corrosion.

- Do not damage or open the airtight packaging too early if the packaging is used to preserve the unit.

Information

Loss of warranty

If you remove or cause damage to the airtight packaging, Flender shall not accept any claims under the warranty for the preservation period of the gear unit.

Assembly 5

5.1 General assembly instructions

Assembly work must be performed very carefully by authorised, trained and suitably instructed personnel. Liability will be disclaimed for damage caused by the incorrect performance of this work.

Requirements

Improper use can damage the gear unit. Take the following precautions:

- Protect the gear unit against falling objects and from becoming covered over.
- Do not perform any welding work anywhere on the drive.
- Do not use the gear unit as an earthing point for electric-welding operations.
- Use all the fastening points provided in the particular unit design.
- Replace any bolts that can no longer be used with bolts of the same strength class and type.
- Make sure that sufficient hoisting gear is available.
- The open gear unit end is sealed with a protective cover (transport cover) to protect it against corrosion and the ingress of foreign particles. The gear unit is equipped with a transport brace to prevent the intermediate shaft from moving.
  Remove both components as late as possible during assembly to ensure corrosion protection.

Mounting position and attachment points

During the actual planning phase, be sure to allow for sufficient space around the gear unit to enable subsequent upkeep and maintenance work. Take suitable measures to ensure that unhindered convection across the housing surface is possible so that the gear unit does not overheat.

The foundation drawing including data regarding the dimensions, weight, load levels, design notes (connections) was already handed over for authorisation. You can find this foundation drawing in the complete gear unit documentation.

Do not use incorrect attachment points (Page 29). You will find the positions of the attachment points in the dimension drawing, which is part of the complete documentation of the gear unit. To ensure that the unit is properly lubricated during operation, please observe the mounting position specified in the dimension drawings.

NOTE

Heating of the gearbox by external heat sources

The gear unit must not be heated by external heat sources (exposure to direct sunlight, for example) while it is in operation and measures must be taken where necessary to protect it.

You can take the following measures to protect the gear unit against this hazard:

- A canopy to protect against the sun
- An additional cooling device
- A temperature monitoring device with shutdown function in the oil sump

Hotspots can develop if you use a canopy to provide protection against the sun.

If you use a temperature monitoring device, it must be capable of outputting an alarm when the maximum permissible oil sump temperature is reached. It must also be capable of switching the drive off when the maximum permissible oil sump temperature is exceeded. The operator's process might be interrupted when the drive is shut down.



⚠ WARNING

Ignition of vapours emitted from solvents

There is a risk of injury due to ignition of vapours emitted from solvents during cleaning work.

Please note the following:

- Ensure sufficient ventilation.
- Do not smoke.

The following table contains a selection of the most important tools required for assembly:

Tool		Provided by	
		Assembly technician	Customer
Levelling instrument with parallel plate micrometre			X
2 dial gauges with magnetic stands			X
Spirit level	0.02 mm/m, 200 mm long		X
Ruler (to align the baseplate)			X
Gear unit size 18	approx. 2,350 mm		
Gear unit size 22	approx. 2,710 mm		
Gear unit size 25.4	approx. 3,130 mm		
Gear unit size 30	approx. 3,770 mm		
Material for the casting frame			X
(e.g. L profile or boards, 100 to 150 mm wide)			
Gear unit size 18	Total minimum length 8 m		
Gear unit size 22	Total minimum length 9 m		
Gear unit size 25.4	Total minimum length 10 m		

Tool		Provided by	
		Assembly technician	Customer
Gear unit size 30	Total minimum length 13 m		X
If required, anchors for the L profile, sand for the boards			
Digital depth gauge or micrometer screw gauge (variable lengths) up to a depth of 500 mm			X
Height measuring stand			Purchase or in-house manufacture
Pre-tensioning device for foot fastening bolt, minimum 2,500 bar, including manual lever pump and high-pressure hose			Purchase
Gear unit size 18	Not required		
Gear unit size 22	M80x4		
Gear unit size 25.4	M90x4		
Gear unit size 30	Not required		
Measuring bar to align the gear unit			X
Gear unit size 18	Diameter 35 to 40 x 1,450		
Gear unit size 22	Diameter 45 to 50 x 1,700		
Gear unit size 25.4	Diameter 50 to 60 x 2,000		
Gear unit size 30	Diameter 65 to 75 x 2,280		
Lengths are minimum lengths; material, e.g. drawn steel			
Feeler gauge 0.05 to 2 mm			X
2x hydraulic jacks 10 t			X
2x pumps for hydraulic jacks			X
Various materials/tools: for example, solvent for Tectyl, containers to mix the grouting compound, stirring stick, drill, M30 hexagon wrench, steel cutting machine, plumb bob, tape measure			X
If required, for the pipes: Cutting tool, welding equipment, 15% HCL to acidify, 15% NaOH to neutralise			X
1 kg grease			X

Table 5-1: Tools for assembling DMG2 and DMG3 gear units

5.2 Unpacking the gear unit

Introduction

The scope of delivery is listed in the shipping documents.

⚠ WARNING

Risk of serious injury due to defective product

A defective gear unit can result in serious injury.

Do not put the gear unit into operation if any damage is visible.

Contact Customer Services (Page 69).

Requirement

Check that everything has been delivered immediately upon receipt.

NOTE

Damage to the gear unit due to corrosion

Exposing the gear unit to moisture can result in damage from corrosion.

Do not damage or open the packaging prematurely if the packaging is designed to preserve the unit.

Procedure

To unpack and use the gear unit, proceed as follows:

1. Remove packaging and transport devices in accordance with regulations.
2. Perform a visual inspection for damage and accumulations of dirt.
3. Immediately report any damaged and/or missing parts to Customer Services (Page 69).
4. Dispose of packaging material and transport devices in accordance with regulations.

5.3 Preparatory measures for mounting the gear unit

5.3.1 Checking the girth gear

Introduction

The radial runout is the difference between the maximum and minimum measurement around the circumference of the girth gear. Record the values of at least 16 measuring points.

It is not permissible for the radial and axial runout of the girth gear to exceed the maximum permissible values. You must realign the girth gear if any of the maximum permissible values are exceeded.

The permissible radial and axial runout values for girth gears are listed in the following table. If lower values are specified in the assembly instructions for the girth gear unit, then you must comply with these lower values.

Tip diameter of the girth gear in m	Permissible radial runout in mm	Permissible axial runout in mm
≤ 5.0	0.8	0.8
> 5.0 ≤ 10.0	1.0	1.0
> 10.0	1.3	1.3

Table 5-2: Permissible radial and axial runout of girth gears

The following diagram shows how the dial gauges are positioned on the girth gear:

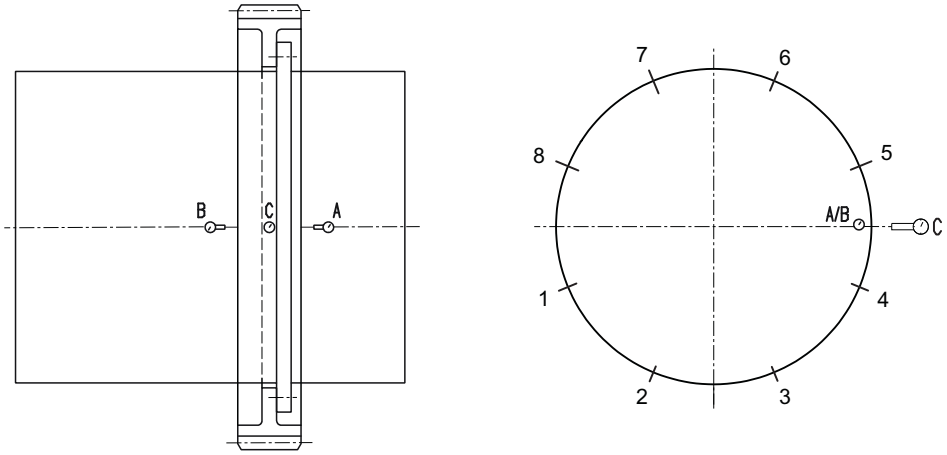

Figure 5-1: Positioning of the dial gauges (A, B, C) on the girth gear

Procedure

Proceed as follows to check the girth gear:

1. Attach three dial gauges to the girth gear. Carefully observe the position of the dial gauges on the girth gear.
2. Ensure that pressure is applied to the hydrostatic bearings.
3. Rotate the tube mill using a winch. Use a winch with reverse locking in order to prevent the tube mill from recoiling.
4. Measure the radial and axial runout and record the results. The procedure is described in the measurement report for the girth gear.
   A deviation higher than 0.2 mm between two consecutive measuring points is not permissible (e.g. between measuring points 4 and 5).
5. Mark the highest point of the radial runout.

5.3.2 Determining the centre of the girth gear

To help carry out the measurements, you can attach two measuring points, offset by 180°, at the alignment surface on the face side of the girth gear. Determine the centre of the girth gear and mark this (e.g. on a wall).

5.3.3 Checking the foundation

The foundation drawing is shown in the following diagram:

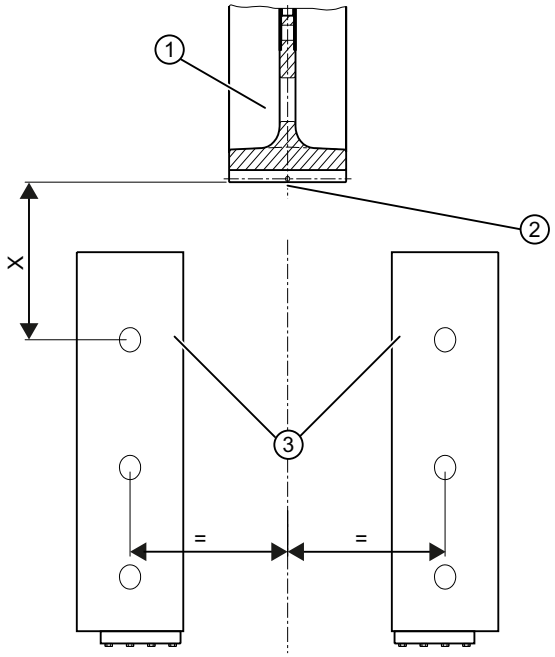

Figure 5-2: Foundation drawing

① Girth gear
② Plumb bob
③ Baseplate

Procedure

NOTE
Damage to gear unit Damage to the gear unit is possible due to production deviations. The assembly dimension “X” can be changed if permissible production deviations of the girth gear are exceeded (e.g. tooth width, tip circle diameter). In this case, contact Customer service (Page 69).

Proceed as follows to check the foundation:

1. Using the foundation drawing, sketch the arrangement of the baseplate to the girth gear on the existing foundation and carefully check this.
2. Using the plumb bob, transfer the outer diameter of the girth gear to the foundation.
3. See the foundation drawing for the assembly dimension “X”.

5.4 Mounting the baseplate

You must have the following parts to assemble the baseplate:

Part no.	Quant-ity	Designation	Part no.	Quant-ity	Designation
1	1	Baseplate	12	6	Plate
2	1	Baseplate		8	Plate for gear unit size 30
3	4	Pedestal	13	6	Steel U-section
4	24	Hexagon bolt		8	Steel U-section for gear unit size 30
5	2	Connecting plate	14	6	Threaded rod
6	8	Hexagon bolt for gear unit size 18		8	Threaded rod for gear unit size 30
	8	Hexagon bolt for gear unit size 22	15	12	Hexagon nut
	16	Hexagon bolt for gear unit size 25.4		16	Hexagon nut for gear unit size 30
	20	Hexagon bolt for gear unit size 30	21		Sealing material
11	16	Hexagon bolt for gear unit size 18	23	4	Hexagon bolt
	20	Hexagon bolt for gear unit size 22	24	4	Hexagon nut
	16	Hexagon bolt for gear unit size 25.4	30	1	Measuring stand
	16	Hexagon bolt for gear unit size 30	31	4	Hexagon bolt

Table 5-3: Parts required to assemble the baseplate

The following diagram shows the assembly drawing:

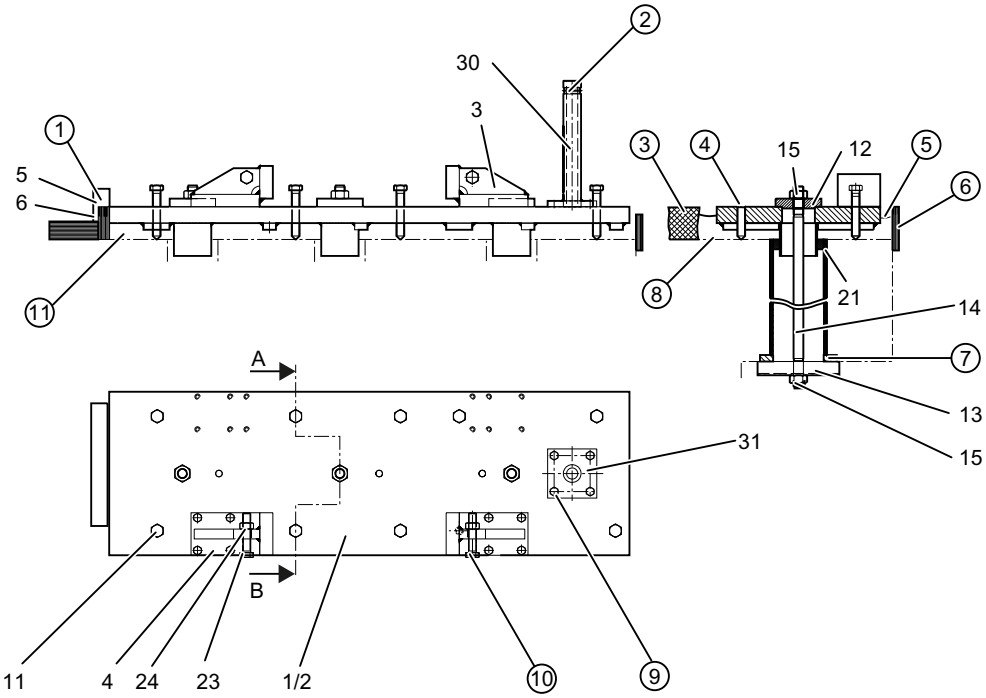

Figure 5-3: Assembly drawing

① Connecting plate (only screw on after casting)
② Measuring stand (is part of the system builder's measuring equipment; align to the centre of the girth gear)
③ Shuttering
④ Hexagon bolts (11) (after the casting compound hardens, cut off and scour)
⑤ Concrete foundation (cast, approximately 50 mm thick)
⑥ Shuttering
⑦ Steel plate
⑧ Casting mix for the concrete foundation, (non-shrinking, compression strength ≥ 90 N/mm^2)
⑨ Holes for the measuring stand
⑩ Pedestal (to longitudinally align the gear unit)
⑪ Concrete foundation

Procedure

NOTE

Damage to gear unit

Damage to the gear unit is possible due to production deviations.

Ensure that the two baseplates are precisely horizontal and flat with respect to one another. Maximum deviation must not exceed 0.1 mm per 1 m.

Proceed as follows to assemble the baseplate:

1. Position the baseplates and check the assembly dimensions.
2. Bolt the measuring stand to the first baseplate (1).
   The measuring stand has dimension-dependent markings that correspond to the centre of the main gear unit (height) in the operating condition.

3. Align the baseplates in terms of height. Carefully observe the stamping on the gear unit. There is a tolerance of +/- 0.5 mm.
4. Using the threaded rods (14) and the accessories (12, 13, 15), clamp the baseplate to the foundation and horizontally align it using the set screws (11).
5. Check that it is in a horizontal position using a spirit level. Using the levelling instrument, check the exact height over the measuring stand/fixed point in the building (tube mill axis).
6. Pre-align the second baseplate (2) using a straight-edge and assemble the second baseplate in the same way as you did the first.
7. Enclose the baseplates in shuttering and cast them using a non-shrinking material with defined attributes, as specified in the foundation drawing.
8. Seal the foundation holes so that the casting compound cannot enter them. To do this, release the threaded rods (14) individually to achieve the correct seal.
9. Comply with the special instructions for using this casting compound.
10. Check the baseplates again using a spirit level.
11. Remove the auxiliary fixtures after the casting compound has hardened.
12. Insert the foot fastening bolts for the gear unit in the foundation holes as it will not be possible to fasten the bolts later.
13. Cut off the set screws (11).

5.4.1 Tightening procedure

5.4.1.1 Properties of the bolts and mating threads

Bolts

Information

Replacing bolts

Replace any bolts that are no longer fit for use by bolts of the same type and strength class.

The bolts must have the following properties:

- Made of steel
- Black-annealed or phosphatised
- Lightly oiled (do not add additional oil)

Mating threads

Information

Using a lubricant

As a rule, lubricants may not be used, because this can result in the bolt connection becoming overloaded.

The mating threads must have the following properties:

- Made of steel or cast iron
- Dry, cut threads

5.5 Mounting the gear unit

Assembly of the gear unit is shown in the following diagram:

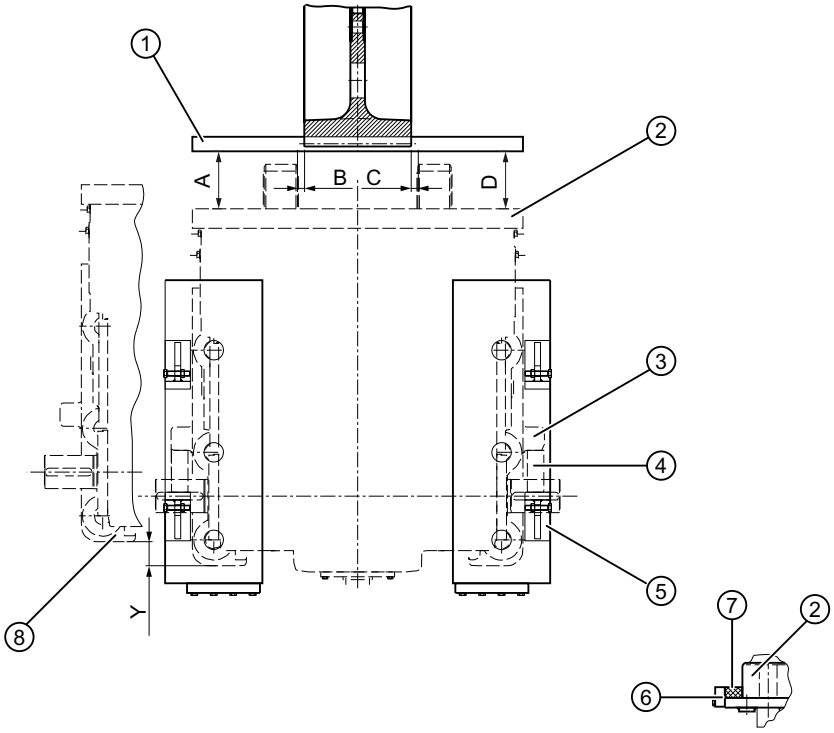

Figure 5-4: Gear unit assembly

① Measuring bar
② Gear unit
③ Cam on the gear unit housing
④ Hydraulic cylinder
⑤ Stopper on the baseplates
⑥ Stop rail
⑦ Grouting compound
⑧ Rear edge of the gear unit for zero tooth flank backlash
A Dimension A
B Dimension B
C Dimension C (B = C)
D Dimension D (A = D)
Y Pull-back distance

Requirements

⚠ DANGER

Danger to life from flying fragments

Failure to align the unit with the required degree of accuracy can cause the shaft to rupture. A ruptured shaft can result in serious or even fatal injuries.

Align the gear unit exactly so that it conforms to the specified alignment values.

Damage to the gear unit or its components or mounted components is possible.

The accuracy of the alignment between the shaft axes largely determines the service life of the shafts, rolling-contact bearings and couplings. Please therefore always endeavour to achieve zero deviation in the alignment of the shaft axes (does not apply to ZAPEX couplings). See also the relevant instructions, for example, for the requirements of couplings.

⚠ CAUTION

Risk of chemical burns from chemical substances

There is a risk of chemical burns when handling aggressive cleaning agents.

Please observe the manufacturer's instructions on how to handle cleaning agents and solvents. Wear suitable protective equipment (gloves, safety glasses). Remove any spilled solvent immediately with binding agents.

NOTE

Damage to the gear wheels

The gear can be damaged.

Proceed with extreme caution when meshing the gears and approaching a tooth flank backlash of "zero". Constantly check the backlash of both meshing positions. Under no circumstances may you continue to move the gear unit if at one meshing position a tooth flank backlash of "zero" is reached.

Improper use can damage the gear unit. Take the following precautions:

- Remove the cover (transport cover).
- Use a suitable cleaning agent to remove the corrosion protection from the input shafts and mounting surfaces.
- Remove the corrosion protection and dirt from the contact surfaces before you place the gear unit down on the baseplate.
- Do not allow cleaning agents to come into contact with the shaft sealing rings.
- Use a fitting tool to assemble the input elements (e.g. coupling parts) onto the shafts and secure them. See chapter Couplings (Page 43).
- Check that the point marked on the girth gear (highest point of the radial runout measurement) is at the height of the tube mill axis.
- Use suitable hoisting gear to place the gear unit in position.

Procedure

Proceed as follows to install the gear unit:

1. Place the gear unit down on the baseplate.
2. Check the height using the levelling instrument. Determine the centre to the girth gear in the width axis using the helical gears (part Nos. 216 and 217 in the replacement parts drawing).
   Dimensions B and C must be equal (B = C).
3. Mount a lever arm on the input shaft so that the pinions can be turned.
4. Remove the transport brace for the floating shaft. To do this, loosen the locknuts and remove the threaded rods at both sides of the gear unit. Close the bore hole in the bearing cover using an appropriate plug.
5. Using hydraulic jacks, move the main gear unit towards the girth gear until a tooth flank backlash “equal to zero” is reached.
   Carefully ensure that the pinion teeth mesh in parallel to the teeth of the girth gear.
6. At this position, insert a measuring bar between two teeth of the girth gear to precisely define the exact parallel position of the main gear unit to the tube mill axis.
   Make a measurement between the measuring bar and the flange at the main gear unit, to which the seal is attached. Dimensions A and D must be equal (A = D).
7. Align the gear unit.
8. Retract the complete drive back by dimension “Y” specified in the foundation drawing. This results in the tooth-flank backlash required for operation. To ensure that the drive is equally retracted, at the rear of the gear unit mounting feet attach two dial gauges while retracting the gear unit using the hydraulic jacks.
9. Check the shaft height of the gear unit and ensure that it is in parallel with the girth gear. The dial gauges are left in place for checking.

Further information

Further information about removing the corrosion protection can be found in the Instructions 7300 in the complete documentation for the gear unit.

You can find further information on attaching gear units to hoisting gear in cases where the weight of the gear unit necessitates the use of hoisting gear in the Application planning (Page 27) chapter.

If the gear unit is to be transported with assembled parts and components, then it may be necessary to use additional attachment points. The position of these attachment points can be found in the dimension drawing in the complete documentation for the gear unit.

5.5.1 Fastening foundation bolts

Procedure

⚠ CAUTION

Physical injury as a result of incorrect assembly

Incorrect assembly can result in damage and consequential physical injury.

- Tighten fastening screws or nuts to the specified tightening torque.
- Tension them to the specified preload force using the hydraulic pre-tensioning device.

To fasten the foundation bolts, proceed as follows:

1. Pull up the foundation bolts and temporarily fasten them with the relevant nuts and washers.
2. Tighten the bolts according to the assembly instructions.
3. Check the drive again with the fixed point “centre of girth gear” in the building and the measuring pointer in the housing. Check the reference points attached in the housing using a spirit level.
4. Record the measured values.
5. Keep the report together with these instructions at the tube mill.
6. For additional safety, cast non-shrinking material in the space between the stop rail and the gear unit feet.

The following table lists the preload forces and tightening torques for bolt connections with strength class 10.9:

Gear unit size	Type of foundation nuts	Diameter	Preload force in kN	Tightening torque in Nm
18	Superbolt	M72x4 - M16	1 750	265
22	Hexagon bolt	M80x4	1 950	-
25.4	Hexagon bolt	M90x4	2 550	-
30	Superbolt	M110x6 - M20	3 900	800

Table 5-4: Technical data of the foundation bolts/nuts

5.6 Couplings

Introduction

Improper use can damage the gear unit. Take the following precautions:

- If necessary, perform the following preparatory work in accordance with the instructions for the coupling:
  - Mill the finished bore
  - Mill the parallel keyway
  - Fit the axial locking element
  - Balance
- Align the individual components precisely with one another.
- Refer to the instructions for the coupling for instructions on how to install, maintain and operate the coupling.

⚠ WARNING

Risk of injury due to coupling rupture

Flying fragments can cause fatal injury.

Observe the instructions for the couplings.

NOTE

Serious or irreparable damage to the gear unit and coupling caused by inaccurate or incorrect alignment

Failure to accurately or correctly align the gear unit and coupling may result in serious or irreparable damage to both components.

Align the individual components precisely with one another when installing the drives. Make sure that the maximum permissible misalignment values are not exceeded during operation.

Further information

You can find further information about the couplings in the coupling instructions provided in the complete documentation for the gear unit.

5.6.1 Assembling the coupling

Introduction

The method used to mount the coupling varies according to model. The procedure described in these instructions is general rather than specific to one type of coupling.

Mount the coupling as described in the instructions for the specific coupling.

Improper use can damage the gear unit. Take the following precautions:

- Do not use force (hammer blows, etc.) to fit the coupling parts as this can cause internal damage to the gear unit.
- Do not damage the existing shaft sealing rings and the shaft running surfaces when fitting coupling parts.

Procedure

To fit the coupling, proceed as follows:

1. Carefully clean the shaft ends and the coupling parts.
2. Use a suitable fixture to mount the coupling parts on the shaft ends.
3. Lock the coupling parts to prevent axial misalignment.
4. Move the machines to be coupled close to one another and then align them (Page 45).
5. Join the coupling parts together.

Heating coupling parts prior to mounting

Depending on the order specification, it may be necessary to heat the coupling parts before mounting them.



⚠ WARNING

Risk of burns

Possible risk of serious burn injury from hot surfaces (> 55 °C).

Wear appropriate protective gloves and protective clothing.

Improper use can damage the gear unit. Take the following precautions:

- The required joining temperatures can be found in the dimension drawings in the instructions for the coupling.
- Unless otherwise instructed, heat the coupling parts by an induction burner, with a torch or in an oven.
- Use heat shields designed to protect against radiant heat in order to safeguard the shaft sealing rings against damage or heating to above 100 °C.
- Quickly fit the coupling parts on the shafts. The mounting dimensions can be found in the dimension drawings in the instructions for the coupling.

Further information

You can find additional information about the coupling in the coupling instructions provided in the complete gear unit documentation.

5.6.2 Aligning the coupling

Introduction

The coupling parts might become misaligned:

- Due to failure to accurately align the parts during assembly
- During operation of the system:
  - Due to thermal expansion
  - Due to shaft deflection
  - Due to machine frames that are too soft

Improper use can damage the gear unit or the coupling. Take the following precautions:

- Make sure that the maximum permissible misalignment values are not exceeded during operation.
  - If you are using couplings supplied by Flender, you will find the maximum permissible misalignment values in the instructions for the coupling.
  - If you are using couplings supplied by other manufacturers, contact them and ask them for the maximum permissible misalignment values, making sure that you specify the potential radial loads for your application. Archive the instructions for the coupling together with these instructions.
- Angular and radial misalignment might occur simultaneously.
  Make sure that the total value of both misalignments does not exceed the maximum permissible angular or radial misalignment value.

The diagram below illustrates the possible misalignment:

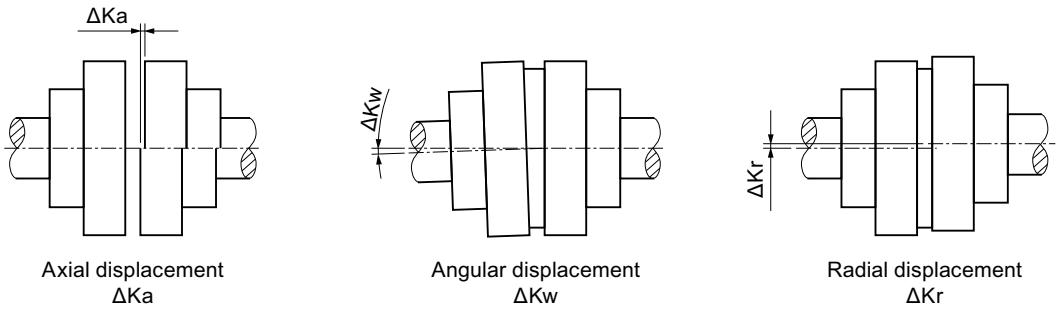

Figure 5-5: Possible misalignment

Alignment

Align the individual components in two mutually perpendicular axial planes. The following can be used as alignment tools:

- Ruler (radial misalignment)
- Feeler gauge (angular misalignment)
- Spirit level
- Dial gauge
- Laser alignment system

You will achieve a greater degree of alignment accuracy by using a dial gauge or laser alignment system.

The diagram below shows the alignment process based on the example of a flexible coupling:

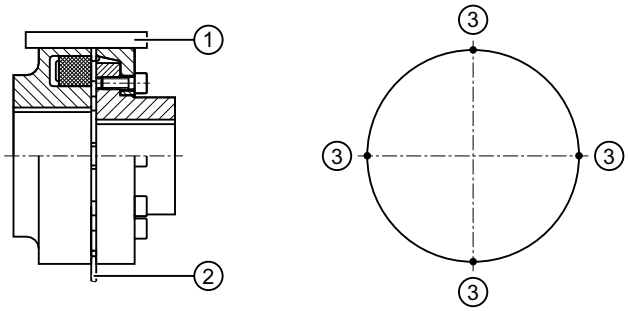

Figure 5-6: Alignment, based on the example of a flexible coupling

① Ruler
② Feeler gauge
③ Measuring points

Information

It is advisable to insert shims or metal sheets under the mounting feet to align the drive components in the vertical direction. It is helpful to use clamping claws with set screws on the foundation to adjust the drive components laterally.

Further information

You can find further information on the permissible alignment errors in the coupling instructions, which form part of the complete documentation for the gear unit, or you can contact the relevant manufacturer.

5.7 Connecting components

5.7.1 Making terminal box connections for pre-wired gear units

Procedure

Proceed as follows to wire up the gear unit:

1. Connect up all pre-wired gear units as shown on the circuit diagram in the terminal box (Page 81).
2. If a pressure monitor is installed, bypass the pressure monitor signal for around 20 seconds during commissioning.
   This is necessary as the pressure in the gear unit must first stabilise.

Further information

You can find further information about pre-wired gear units in the order-specific list of equipment in the complete gear unit documentation.

5.7.2 Installing a separate oil supply system

Procedure

To connect the oil supply system to the gear unit, proceed as follows:

1. Remove the dummy flange from the suction and delivery line before connecting the system.
2. Connect the system to the gear unit in accordance with the dimension drawings in the complete documentation and install it as a separate system.
3. When installing the system, make sure that the pipework is not subjected to mechanical stresses.

Further information

Further information about the oil supply system can be found in the oil supply system instructions contained in the complete documentation for the gear unit.

5.7.3 Connecting the resistance thermometer

To connect the resistance thermometer to the gear unit, proceed as follows:

1. Ensure that the connection of the resistance thermometer is undamaged.
2. Connect the electric wiring between the resistance thermometer and the evaluation unit supplied by the customer.

More information

Further information about the resistance thermometer is contained in the instructions of the resistance thermometer in the complete documentation for the gear unit.

5.7.4 Electrical connections

Requirements

Do not use any motor that exceeds the specified speed of the gear unit, otherwise the gear unit may become damaged. Speeds are displayed on the rating plate.

Improper use can damage the gear unit. Take the following precautions:

- Before connecting the motor, determine the phase sequence of the three-phase power system using a phase sequence indicator.
- Connect the motor corresponding to the predefined direction of rotation.

Procedure



⚠ DANGER

Electric shock

Live parts can cause an electric shock.

Ensure that the entire system is disconnected from the power supply before starting electrical installation work. Carefully observe the five safety rules (Page 15).

To connect the motors and monitoring devices, proceed as follows:

1. Ensure that the connections of the motors and monitoring devices are not damaged.
2. Connect the motors and monitoring devices according to the terminal diagram (Page 81) and the relevant instructions.
3. Insulate all cable entry points (glands) at electrical equipment as required for the environment in which the equipment will operate.

Further information

You can find further information about the electrical connections in the terminal diagrams and lists of equipment, which are part of the complete documentation of the gear unit.

5.8 Final work

Measures

Once all the elements have been assembled or connected, perform the following final work:

- Check whether all devices dismantled for transportation have been reassembled.
- Check all bolt connections for tightness after installation of the gear unit has been completed.
- Check the alignment after tightening the fastening elements. The alignment must not have changed in any way.
- Lock the oil drainage valves against accidental opening.
- Protect the gear unit against falling objects.
- Check that the guards over rotating parts are securely fastened.
  Contact (accidental or deliberate) with rotating parts is not permitted.
- Perform potential equalisation in accordance with the applicable regulations and directives. If no threaded holes are available on the gear unit for an earth connection, please take suitable alternative measures. This work must be carried out by specialists in electrical engineering.
- Protect the cable entries against penetrating moisture.

Further information

You can find additional information about the gear unit and all mounted or separately supplied components in the instructions of the relevant components included in the complete documentation for the gear unit.

You can find more technical specifications in the separate data sheet in the complete gear unit documentation.

Commissioning 6

Introduction

The precondition for the warranty is initial commissioning carried out by specialists from Flender or by skilled persons who have been appropriately trained and are authorised by Flender.

Flender urgently recommends that the aforementioned specialists or skilled persons supervise the first time the gear unit drives the tube mill.

Follow the instructions, particularly with regard to maintenance work on the tube mill, during which the mill rotates and the gear unit rotates with it.

NOTE

Damage to gear unit

Every time the drive is set in motion represents a commissioning process. Do not commission the gear unit without having the instructions at hand.

6.1 General warning notes on commissioning



⚠ DANGER

Danger to life due to rotating or moving parts

There is danger that rotating or moving parts may catch hold of you or pull you in.

- Secure rotating and/or moving parts against contact using safeguards.

⚠ CAUTION

Risk of injury due to chemically aggressive operating materials

There is a risk of injury to eyes and hands when handling chemically corrosive consumables.

- Please observe the safety information in the data sheets of the oil used.
- Wear suitable protective equipment (gloves, safety glasses).
- Immediately clean up any spilt oil using a binding agent.

6.2 Measures prior to commissioning

Take the following measures prior to commissioning the gear unit:

- Read and observe the instructions.
- Follow the checking procedure (Page 55).
- Replace the screw plugs with the air filters. Note the Instructions 7300 for this.

- Gear unit with oil supply system: Check that the oil supply system is working properly.
- Check the oil level.
- Check the gear unit for leaks.
- Gear unit with oil supply system: Take the appropriate measures before commissioning gear units with an oil supply system (Page 55).
- Ensure that all pipework and components are filled with oil.
- Restarting: Make sure that the drive cannot be restarted after safety equipment has responded unless the restarting lockout is cancelled.

Take the following measures prior to commissioning the gear unit:

- Read and observe the instructions.
- Follow the checking procedure (Page 55).
- Replace the screw plugs with the air filters. Note the Instructions 7300 for this.
- Gear unit with oil supply system: Check that the oil supply system is working properly.
- Check the oil level.
- Check the gear unit and the girth gear protective cover for leaks. Depending on the order specification, the girth gear protective cover can be included in the Flender scope of delivery.
- Gear unit with oil supply system: Take the appropriate measures before commissioning gear units with an oil supply system (Page 55).
- Ensure that all pipework and components are filled with oil.
- Restarting: Make sure that the drive cannot be restarted after safety equipment has responded unless the restarting lockout is cancelled.
- Check whether the monitoring devices are connected and switched on.

Further information

You can find further information on oil and changing the air filter in the Instructions 7300, which are part of the complete documentation of the gear unit.

Further information about individual components can be found in the instructions for the components in the complete documentation for the gear unit.

6.2.1 Flushing before first commissioning

Read and observe the Instructions 7300.

The duration of the flushing process before initial commissioning depends on the temperature of the oil.

For flushing before initial commissioning, note the information in the following table:

Oil temperature	Rinsing duration
20 °C	6 h
30 °C	5 h
40 °C	3.5 h

Oil temperature	Rinsing duration
50 °C	2 h

Table 6-1: Rinsing duration

NOTE

Mixing oils

The gear unit can be damaged by mixing oils.

At low oil temperatures, in the cover, the oil for the girth gear only flows back slowly. Before draining the oil, check that the original oil level in the oil supply system has been reached again. The oil can only be reused as flushing oil and only after it has been thoroughly cleaned.

6.2.2 Adjusting the inductive sensor

Introduction

As a result of alignment and gearing deviations of the girth gear, for a gear unit mounted in front of the girth gear, the floating shaft may have moved away from the centre position.

The inductive sensor at the intermediate shaft is shown in the following diagram:

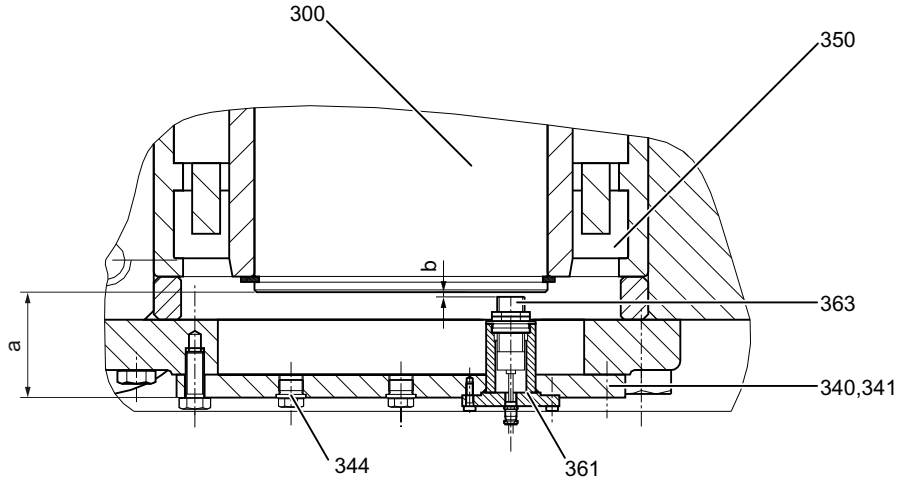

Figure 6-1: Inductive sensor at the intermediate shaft

300	Floating shaft	350	Rolling-contact bearing
340	Cover	361	Sensor sleeve
341	Cover	363	Inductive sensor
344	Screw plug		

Requirements

The following requirements must be fulfilled before the inductive sensor is adjusted:

- The girth gear unit has been mounted in front of the tube mill and is tensioned in the load direction.

- The covers have numbers stamped on them for identification. This identification corresponds to dimension "a“ for the centre position of the floating shaft.

Procedure

Proceed as follows to adjust the inductive sensor (Page 25):

1. Perform a check measurement to check the floating shaft offset.
   – Remove the sensor sleeve or the screw plug.
   – Using a depth gauge, measure dimension "a".
2. Calculate the offset from the centre position from the difference between the measured dimension "a“ and the values stamped on the covers. Also take into account the calculation example.
3. If the axial offset of the floating shaft lies within the permissible range, mount the inductive sensor with a clearance of "b" to the shaft face. You can find dimension "b“ in the list of equipment in the complete gear unit documentation. If required, reinsert the screw plug and tighten.

NOTE

Damage to the gear unit

The gear unit can be damaged as a result of the floating shaft offset.

Check that in operation the maximum permissible dynamic deflection of the floating shaft in the axial direction does not exceed the permissible value. Report any deviations to Customer Services (Page 69).

The permissible axial misalignment of the floating shaft are listed in the following table.

	Gear unit size			
	18	**22**	**25.4**	**30**
Maximum permissible axial offset from the centre position in operation, including dynamic deflection	± 4.5 mm	± 5.5 mm	± 6.0 mm	± 7.5 mm
Maximum permissible dynamic deflection during operation	± 0.7 mm			

Table 6-2: Permissible axial offsets of the floating shaft from the centre position

Example

Calculation example using gear unit size 25.4:

Value stamped on the cover (340):	115.9 mm
Value "a“ measured at the cover (340):	114.2 mm
Axial offset from the centre position:	- 1.7 mm
Value stamped on the cover (341):	115.5 mm
Value "a“ measured at the cover (341):	117.2 mm
Axial offset from the centre position:	+ 1.7 mm
Permissible axial offset from the table:	± 6.0 mm

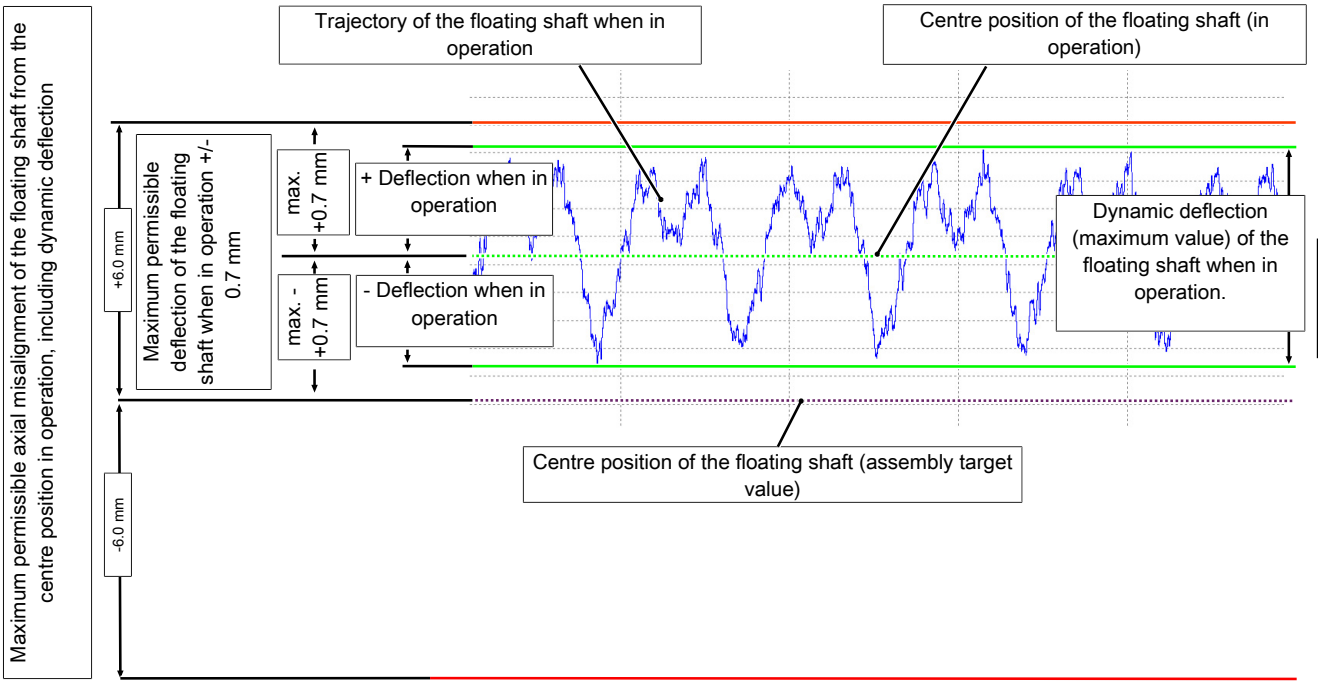

Figure 6-2: Example of floating shaft for gear unit type DMG2 25.4

6.2.3 Gear unit with oil supply system

Take the following measures before commissioning a gear unit with an oil supply system:

- Make sure that the pressure in the oil supply system components does not exceed the maximum permissible pressure.
- Ensure that the maximum permissible temperature of the oil supply system components is not exceeded.
- Using the oil supply system, lubricate the gear unit for 30–60 minutes in a pre-lubrication phase. During this time, the rolling-contact bearings and gearing are supplied with sufficient oil for starting.

Further information

You can find additional information about the oil supply system in the data sheet, in the list of equipment and in the oil supply system instructions provided in the complete gear unit documentation.

6.2.4 Checking procedure

Check all drive components after completion of assembly and before the first cold trial run. Remove all material residue, tools and assembly equipment.

If the oil supply system was supplied by Flender, it has already been function-tested. Before the test run of the tube mill, test the electrical interlocking between the oil supply system and the drive motors.

To perform the checking procedure, inspect the following items:

- ☐ Have the baseplates been completely grouted?
- ☐ Have the foundation bolts been tightened to the correct torque?
- ☐ Have the foundation bolts for the main motor been tightened as specified?
- ☐ Has the inside of the girth gear protection cover been cleaned, and is the return line clear?
- ☐ Has the girth gear been aligned according to assembly specifications?
- ☐ Have the fastening bolts of the girth gear been tightened with the specified tightening torque?
- ☐ Has the girth gear protection cover seal been attached according to specifications and is it operational?
- ☐ Has the seal where the housing is connected to the girth gear protective cover been correctly attached?
- ☐ Have all pipes been installed and cleaned according to the assembly instructions?
- ☐ Have the pipes and hoses been correctly installed?
- ☐ Have the oil tanks been filled up to the filling marks? (Check while the oil supply system is running)
- ☐ Have all monitoring devices been connected according to the circuit diagram?
- ☐ Has the function of the oil supply system been checked?
- ☐ Have the following measurements been recorded:
  - ☐ Height marks at the foundation and position of the tube mill axes
  - ☐ Height of the baseplates
  - ☐ Synchronous operation deviations of the girth gear, axial and radial values
  - ☐ Tooth flank and tip backlash between the girth gear and pinion
  - ☐ Alignment - motor, coupling and gear unit
- ☐ Has the interlocking function been checked according to the interlocking diagram or according to the description?
- ☐ Have the flow monitors, pressure switches and temperature sensors been set to the correct values?
- ☐ Is the cooling water feed open?
- ☐ Has the transport brace for the floating shaft been removed?
- ☐ If an inductive sensor belongs to our scope of delivery: Has the inductive sensor been correctly mounted?
- ☐ Does the axial offset of the floating shaft lie within the permissible range? (When performing the measurement, the gear unit must be tensioned in the load direction. Permissible values are listed in Chapter Adjusting the inductive sensor (Page 53)).

You will find further checking procedures in the instructions of the following components:

- Coupling
- Motor
- Oil supply system
- Girth gear
- Tube mill

6.3 Measures during commissioning

Take the following measures when commissioning the gear unit and document them:

- Archive the report together with these instructions.
- For gear units with oil supply system: Check that the oil supply system is working properly.
- Check the oil level.
- Check the tightness of the shaft seal on the gear unit (Page 24).
- Check that all rotating parts can move freely.
- Check whether the shutoff valves are open.
  - Check that all of the oil drain valves are closed.
  - Ensure that all of the other shutoff valves are open.
- Check that the connecting pipes are firmly seated and tight.
- Check the position of the floating shaft from the zero position, including the dynamic deflection. The maximum permissible axial misalignment and dynamic misalignment are specified in chapter Adjusting the inductive sensor (Page 53).
- For gear units with bearing monitoring using a Pt 100 resistance thermometer: Measure the temperature at the rolling-contact bearings (Page 64) to create initial and comparison values.
- Bypass the pressure monitor signal for around 20 seconds during commissioning. This is necessary as the pressure in the gear unit must first stabilise.

Further information

You can find additional information on the topic of oil in the instructions 7300, which are part of the complete documentation of the gear unit.

Further information about the oil supply system can be found in the oil supply system instructions contained in the complete documentation for the gear unit.

6.3.1 Initial test run

If a cold test run (partial load range without the mill being filled) is required, then it is only permissible that you operate the gear unit via the auxiliary drive.

When operating the system using the main motor, ensure that the tube mill is at least 80 % full.

With the tube mill 80% full, check the contact pattern. Over the tooth width, the contact patterns should indicate a contact surface of at least 80 %. Carefully check the contact patterns, and report any deviations to Customer Services (Page 69).

You can add material to the tube mill if a contact surface greater than 80% is reached.

Operation 7

7.1 Operating data

Introduction

To ensure correct, trouble-free operation of the system, observe the operating values of the gear unit and the data in the instructions for the oil supply system.

The operating values specified in the Annex Technical data (Page 77) apply.

In operation, filter the lubricating oil in the lubricating circuit using a filter with 25 µm nominal filter mesh size.

The following operating values apply to the oil:

Inlet oil temperature	40–45 °C	
Maximum inlet oil temperature	55 °C	Applicable for mineral oil, API groups I or II, and saturated synthetic ester.
	60 °C	Applicable for semi-synthetic oils, API group III, PAO and PG oils.

Table 7-1: Operating values

You will find information about the oil pressure in the data sheet, in the list of equipment or in the dimension drawing in the complete documentation for the gear unit.

Further information

Further information about the technical data of the gear unit can be found in the separate data sheet and the list of equipment in the complete documentation for the gear unit.

7.2 Irregularities in operation

Introduction

Switch off the drive aggregate immediately if it exhibits irregular behaviour during operation.

A few irregularities are listed below as examples:

- Oil temperature exceeds the maximum permissible value
- Alarm tripped by the pressure monitor in the oil cooling system or oil supply system
- Unusual operating noise
- Large axial misalignment or dynamic deflections of the floating shaft that are not permissible
- Significant increase in motor while in operation

NOTE

Faults can cause damage to the gear unit

The gear unit might sustain damage if it is not shut down when a fault occurs.

Switch off the drive assembly immediately if any fault condition develops.

Rectifying irregularities in operation

Proceed as follows to rectify any irregularities in operation:

1. Switch off the drive aggregate if it exhibits irregular behaviour during operation
2. Refer to the “Fault information” (Page 65) to find the cause of the fault.
3. If you still cannot determine the cause of the fault, contact FlenderCustomer Service (Page 69).

7.3 Taking the unit out of service

⚠ WARNING

Risk of injury to eyes from pressurised air

Water residue and dirt particles can cause damage to eyes.

Wear suitable safety glasses.

If you take the unit out of service for a prolonged period, you must take the following measures depending on the length of time that the gear unit will remain out of service:

- Switch off the drive aggregate.
- On gear units with a water-oil cooler:
  - If there is a risk of frost or the unit is to be taken out of service for a prolonged period, drain the water from the water-oil cooler and remove residual water with compressed air.
  - Close the shutoff valves for the cooling water inlet and drain lines.
- Take measures to preserve the gear unit if it is to be taken out of service for a prolonged period. Follow the procedure described in Instructions 7300.
- For gear units with a separate oil supply system, perform the following steps before you preserve the gear unit:
  - Disconnect the gear unit from the separate oil supply system.
  - Seal the openings at the gear unit and separate oil supply system so that they are air-tight.

Maintenance 8

8.1 General maintenance information



⚠ WARNING

Danger to life when the system is switched on

Working on a gear unit while it is in operation is hazardous and can result in potentially fatal injuries.

Always shut down the gear unit and any oil supply system (whether separate or mounted on the gear unit) before you carry out any work. Take measures to prevent the accidental restarting of the drive aggregate. Attach a notice stating clearly that work is being performed on the gear unit. Ensure that the tube mill has settled and come to a complete stop, and secure it using a holding brake.

The operator must ensure compliance with the stipulated time limits. This also applies if the maintenance activities are included in the operator's internal maintenance schedules.

The gear unit could be damaged if the stipulated intervals for maintenance and servicing work are not observed.

The time limits stipulated in the maintenance schedule are largely dependent on the conditions of use of the gear unit. For this reason, it is only possible to state average time limits here. These refer to the following conditions of use:

- Daily operating time 24 h
- Duty cycle "ED" 100%
- Gear unit input speed 1500 rpm
- Average oil temperature in the oil sump (see Instructions 7300)

8.2 Maintenance schedule

Maintenance and servicing activities

The following table provides an overview of all maintenance and servicing activities that you are required to perform on an ongoing basis or at regular intervals. Use the corresponding checklist (Page 83).

Intervals and time limits	Measures
As required	Clean the nozzles and throttles in the oil distribution system Clean the gear unit Replace the oil filter Clean the air filter
According to manufacturer's specifications	Maintain the oil supply system

Intervals and time limits	Measures
Weekly	Check for leaks Check the oil level Inspect the oil filter of the oil supply system for dirt Inspect instruments installed in situ (temperatures, oil pressures)
Every 2 weeks	Clean the filter cartridges
Every 4 weeks	Visually inspect the girth gear system and gear unit for cracks, leaks and damage Check the oil temperature Check for any change in the noise made by the gear unit Inspect the guards Visually inspect the condition of the gear tooth flanks and the contact patterns
Every 3 months	Clean the oil filter Clean the air filter Clean the nozzles and throttles in the oil distribution system Check that the foot fastening bolts are tight
Every 6 months	Inspect the mounted components (couplings, auxiliary drive) Perform an oil analysis Check the protective cover for the girth gear
Every 12 months	Visually inspect the gear tooth flanks for damage Inspect the hose lines Clean the overrunning clutch Check that the fastening bolts are tight Check the drive for alignment errors Main motor general overhaul
Every 10,000 operating hours, at least every 2 years	Carry out oil change if using API Groups I or II mineral oils, or saturated synthetic ester (or depending on the result of the oil sample test) Check the condition of the air-oil cooler (the same time as you change the oil) Check the condition of the water-oil cooler (the same time as you change the oil)
Every 2 years	Carry out a general inspection of the gear unit Clean the gear unit
Every 20,000 operating hours, at least every 4 years	Carry out oil change if using semi-synthetic oil of API Group III, PAO or PG oil (or depending on the result of the oil sample test)

Intervals and time limits	Measures
6 years after the stated date of manufacture	Change the hoses

Table 8-1: Maintenance and servicing activities

More information

You can find further information about additional maintenance and servicing activities in the separate data sheet in the complete documentation for the gear unit.

More information about installed components can be found in the instructions for the components in the complete documentation for the gear unit.

8.3 Maintenance and servicing work

Introduction

You can find maintenance and servicing measures relating to gear unit lubrication and preservation, which are not provided in this chapter, in instructions 7300 in the complete documentation for the gear unit.

8.3.1 Contamination limits

The following table contains the material-specific contamination values of the oil:

Material	Limit proportion in mg/kg	Possible source
Iron (Fe)	40	Girth gear, gear wheels, rolling-contact bearings
Chromium (Cr)	4	Plain and rolling-contact bearings, gear wheels
Aluminium (Al)	4	Oil pump bearings
Copper (Cu)	4	Rolling-contact bearing cages
Lead (Pb)	6	Pump plain bearing, tube mill plain bearing
Tin (Sn)	2	Pump plain bearing, tube mill plain bearing
Nickel (Ni)	2	Gear wheels
Zinc (Zn)	10	Zinc-based primer (sometimes used as an additive). In this case, contact Flender.
Silicon (Si)	20	Dust or other environmental influences
Water (H_2O)	0.03%	Condensation, water-oil cooler defective

Note that the deviation in the viscosity of the oil sample from the viscosity of the oil specified in the technical data should not exceed 10 %.

NOTE

Damage to the gear unit

The gear unit may be damaged by dirty operating oil and mixing different oil grades.

Replace the oil if the contamination limits stated in the table or the purity class 20/18/15 according to ISO 4406 is exceeded.

After changing the oil, fill the gear unit with the oil grade that was previously used. Do not mix oils of different grades or manufacturers.

8.3.2 Servicing

Preparatory measures

Servicing encompasses all of the measures required to keep and restore the reference state as well as to identify and assess the actual state of technical equipment of a system.

Attach and secure the individual components and large assemblies to the lifting equipment carefully during replacement.

8.3.3 Measuring the temperature at the rolling-contact bearings

Procedure

Proceed as follows to measure the temperature at the rolling-contact bearings:

1. Measure the temperature at the rolling-contact bearings.
2. Document the measurement results.
3. Compare the measured values with the comparison values that were documented when commissioning the gear unit.
4. Archive the report together with these instructions.
5. Replace defective rolling-contact bearings.

Further information

You can find additional information about measuring the temperature at the rolling-contact bearings in the instructions of the Pt 100 resistance thermometer, which are part of the complete documentation of the gear unit.

8.3.4 Cleaning the gear unit

Introduction

Layers of dust may affect the dissipation of heat through the surface of the gear unit, resulting in overheating. Depending on the operating conditions, it may therefore be necessary to clean the gear unit more frequently than stated in the maintenance schedule.

Procedure

To clean the gear unit, proceed as follows:

1. Use a hard brush to remove any stubborn dirt from the gear unit. Never use a high-pressure cleaning device.
2. Remove any spots of corrosion.

8.3.5 Check that all of the fastening bolts are tight

Procedure

Proceed as follows to check that the fastening bolts are tight:

1. Observe the data regarding bolt connection classes, preload forces and tightening torques.
2. Replace any bolts that are no longer fit for use with bolts of the same strength class and type.

8.3.6 Retrofitting components

If you want to retrofit components such as heating elements, contact the Flender Customer Services.

8.3.7 General inspection of the gear unit

Arrange for Flender Customer Services to inspect the gear unit. Thanks to their experience, these engineers are best placed to assess which gear unit components need to be replaced.

8.3.8 Final work

After you have finished all the work listed in the maintenance schedule, replace any bolts that are no longer fit for use by bolts of the same strength class and type.

8.4 Possible faults

The faults listed below are only intended as a troubleshooting guide.

If any faults occur while the unit is still under warranty, do not allow anyone except Flender Customer Service to attempt a repair.

Even after the warranty period has expired, you should still arrange for faults to be rectified by Flender Customer Service.

Information

Loss of warranty

You will invalidate the warranty for the gear unit if you modify it in any way without seeking the approval of Flender beforehand, or if you do not use original spare parts.

Only use original spare parts from Flender. Always arrange for Flender Customer Services to repair any faults that develop while the unit is still under warranty.

Possible faults and how to rectify them

The following table provides an overview of the possible faults and how to rectify them.

Possible faults	Causes	Possible remedies
Pressure monitor triggers an alarm.	Oil pressure has dropped below minimum value	• Check the oil level at room temperature • Top up with oil if necessary • Check the oil pump • If required, replace the oil pump • Check the oil filter and coarse filter • If required, replace the oil filter or clean the coarse filter
Noise	Damage to the gears	• Contact Customer Service • Inspect the gear components • If necessary, replace damaged components
	The bearing play is excessive	• Contact Customer Service • Adjust bearing play
	Defective rolling-contact bearings	• Contact Customer Service • Replace defective rolling-contact bearings
	Gear unit fastening has worked loose	• Tighten bolts and nuts to the specified tightening torque • Replace damaged bolts and nuts
Outer surface of gear unit soiled with oil	Inadequate sealing of the housing cover or joints	• Seal housing cover or joints
	Labyrinth seals soiled with oil, incorrect transport position	• Check oil filling • Clean the labyrinths
Leakage	Seals on the girth gear protective cover are defective	• Check the seals and if required, repair or replace them
Oil is foaming in the gear unit	Preservation agent not completely drained off	• Change the oil
	Oil supply system left in operation for too long at low temperatures	• Switch off the oil supply system • Degas the oil

Possible faults	Causes	Possible remedies
Oil is foaming in the gear unit	Gear unit too cold in operation	• Switch off the gear unit • Degas the oil • Start up without cooling water during cold restart
	Water in the oil	• Take test tube sample to examine oil condition for water penetration • Have the oil examined by a chemical lab • Change the oil if necessary
	Oil defoamer has run out	• Examine the oil • Change the oil if necessary
	Unsuitable mixture of oils	• Examine the oil • Change the oil if necessary
Oil escaping from the gear unit	Inadequate sealing of the housing cover or joints	• Check the seals and if required, replace • Seal housing cover or joints • Check the compression seals and retighten screws if necessary
	Leaking pipes	• Check the pipes, and replace or seal if necessary
Oil supply system malfunction	-	• Observe the instructions for the oil supply system
Elevated temperature during operation	Oil is too old	• Check when the last oil change was performed • Change the oil if necessary
	Oil is severely contaminated	• Change the oil
	Oil supply system is defective	• Check the oil supply system • If necessary, replace defective components • Observe the instructions for the oil supply system
	Gear unit with water-oil cooler: Coolant flow too low or too high	• Adjust the valves at the supply and return lines • Check the water-oil cooler is flowing freely
	Gear unit with oil cooling system: Inadequate oil flow through the oil cooler	• Check the oil filter and coarse filter • If required, replace the oil filter or clean the coarse filter
	Coolant temperature too high	• Check the temperature; correct if necessary
	Defective oil pump	• Check the function of the oil pump • Repair or replace the oil pump if necessary
Elevated temperature at bearing points	Oil is too old	• Check when the last oil change was performed • Change the oil if necessary.
	Oil supply system defective	• Check the oil supply system • If necessary, replace defective components • Observe the instructions for the oil supply system

Possible faults	Causes	Possible remedies
Elevated temperature at bearing points	Defective rolling-contact bearings	• Contact Customer Service • Inspect the rolling-contact bearings and replace if necessary
	Defective oil pump	• Check the function of the oil pump • Repair or replace the oil pump if necessary
	Oil is severely contaminated	• Change the oil
Increased vibration amplitude at bearing points	Foot fastening bolts have become loose	• Tighten the foot fastening bolts to the specified tightening torque
	Defective rolling-contact bearings	• Contact Customer Service • Inspect the rolling-contact bearings and replace if necessary
	Gear wheels defective	• Contact Customer Service • Inspect the gear wheels and replace if necessary
	Repercussion of tube mill fault	• Observe the instructions for the tube mill • Contact the Customer Services department of the tube mill supplier
	Foundation damage	• Contact Customer Service • Repair the foundation
Water in the oil	Oil supply system is defective	• Check the oil supply system • If necessary, replace defective components • Observe the instructions for the oil supply system
	Machinery compartment fan is blowing cold air onto gear unit: Water condenses	• Install suitable thermal insulation to protect gear unit housing • Close the air outlet or change the direction of the air outlet using structural measures
	Climatic conditions	• Contact Customer Service • Use wet-air filter if necessary
	Oil foams in the oil sump	• Take test tube sample to examine oil condition for water penetration • Have the oil examined by a chemical lab

Table 8-2: Possible faults and how to rectify them

Service & Support 9

9.1 Contact

When ordering replacement parts, requesting a customer service technician or if you have any technical queries, contact our factory or one of our Customer Service addresses:

Flender GmbH

Am Industriepark 2

46562 Voerde

Germany

Tel.: +49 (0)2871 / 92-0

Fax: +49 (0)2871 / 92-1544

More information

Further information about service and support can be found on the Internet:

Service & Support (https://www.flender.com/service)

Disposal

10

Disposal of the gear unit

When disposing of the gear unit after its useful life, please observe the following measures:

- Remove operating oil, preservation agents and coolant from the gear unit and dispose of it according to regulations.
- Dispose of the gear unit parts according to applicable national regulations or recycle them.

Environmental protection

Observe the following environmental protection measures for disposal:

- Dispose of or recycle packaging material according to applicable national regulations.
- When changing the oil, collect the used oil in suitable containers. Use oil-binding agents to clean up any oil spillages immediately.
- Store preservative agents separately from used oil.
- Dispose of used oil, preservative agents, oil binding agents and oil-soaked cloths according to the applicable environmental protection regulations.

Spare parts

11

By stocking the most important spare parts at the installation site, you can ensure that the gear unit is ready to use all the time.

Information

Damage to the gear unit due to use of unsuitable spare parts

Only use original spare parts from Flender. Flender shall not accept any warranty claims for spare parts that are not supplied by Flender.

Other spare parts are not tested and approved by Flender. Non-approved spare parts may possibly change the design characteristics of the gear unit and thus impair its active or passive safety.

Flender will accept no liability or warranty whatsoever for damage occurring as a result of the use of non-approved spare parts. The same applies to any accessories which were not supplied by Flender.

The contact address of Flender Customer Services can be found under Service & Support (Page 69).

Information required when ordering spare parts

To order replacement parts, refer to the replacement parts list. Use Flender replacement parts only.

When ordering replacement parts, provide the following information:

- Order number with item
- Model and size
- Part number
- Quantity

For further information on spare parts, please refer to the order-specific spare parts drawing and the list of spare parts that can be found in the complete documentation for the gear unit.

Declaration of incorporation

A

Declaration of Incorporation

Business name and full address of manufacturer:

Flender GmbH
Am Industriepark 2
46562 Voerde
Germany

Name and address of the person authorised to compile the relevant technical documentation:

Mark Zundel
Flender GmbH
Am Industriepark 2
46562 Voerde
Germany

Description and identification of the partly completed machine:

Girth gear units for tube mills
DMG2
Sizes 8, 22, 25.4 and 30
DMG3
Sizes 18, 22, 25.4
to power driven machines

The following “Essential Health and Safety Requirements” from – Directive 2006/42/EC Official Journal L 157, 9 June 2006, pages 24-86, Annex I, are applied and are fulfilled:

1.1.1; 1.1.2; 1.1.3; 1.1.5; 1.3.1; 1.3.2; 1.3.7; 1.3.8.1; 1.4.1; 1.5.1; 1.5.2; 1.5.4; 1.5.6; 1.5.7; 1.5.8; 1.5.9; 1.5.10; 1.6.1; 1.6.2; 1.6.5; 1.7.1; 1.7.1.1; 1.7.2; 1.7.4; 1.7.4.1; 1.7.4.2; 1.7.4.3

The relevant technical documentation according to Annex VII Part B has been created.

The manufacturer undertakes to send national authorities electronic copies of the relevant technical documentation for the partly completed machine following a reasoned request.

The partly completed machine may only be put into operation if it has been determined where applicable that the machine in which the partly completed machine is to be incorporated meets the specifications of the Directive 2006/42/EC.

Representative for issuing this Declaration of Incorporation on behalf of the manufacturer:

Flender GmbH



Voerde, 2023-10-12

Mark Zundel, Vice President, Industrial Gears, Plant Voerde

Translation of the Declaration of Incorporation

Technical data

B

B.1 Technical representation

The gear unit dimensions are shown in the following diagram:

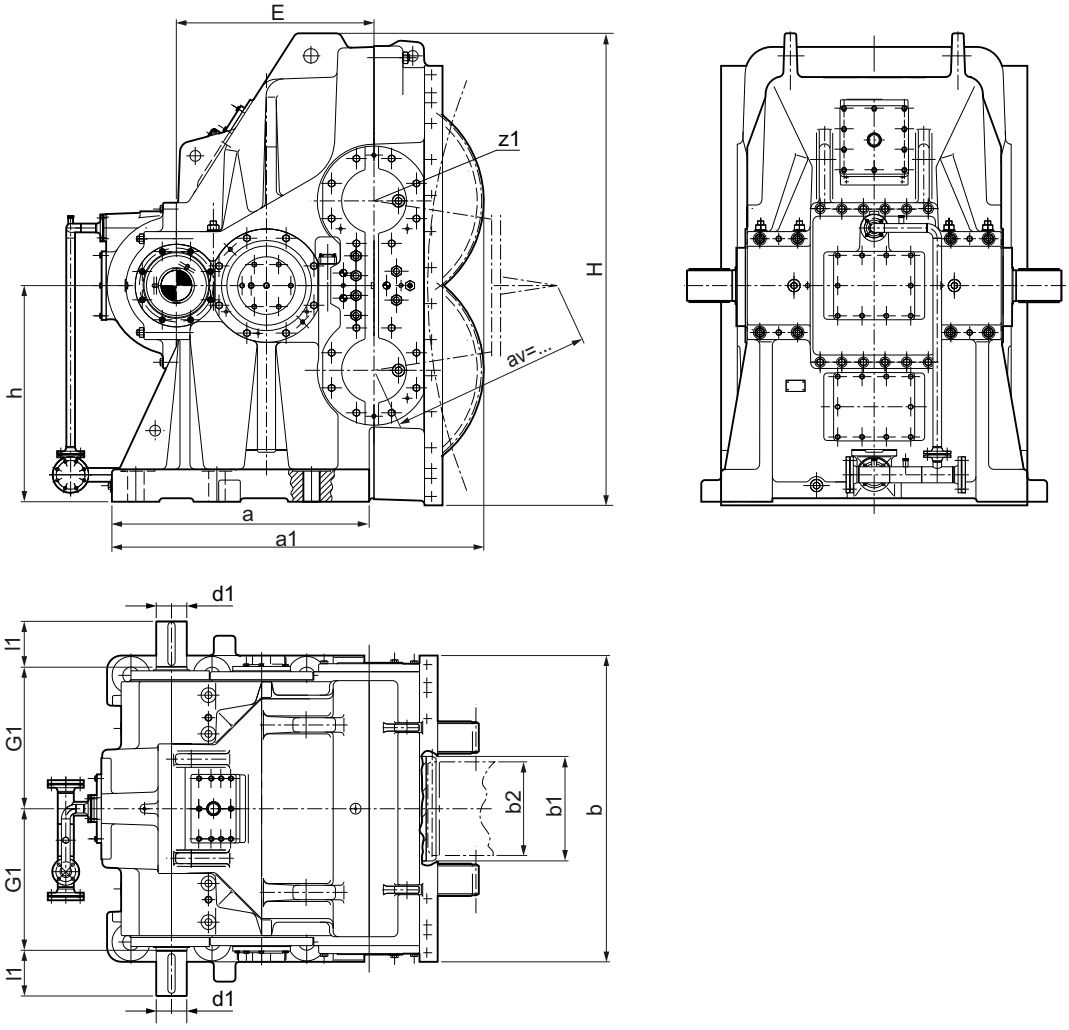

Figure B-1: Dimensions

Dimensions and torques

The dimensions and torques are listed in the following table:

DMG2		Gear unit size			
		18	**22**	**25.4**	**30**
Gear unit	Ratio i	5.45 - 11.65	5.85 - 11.42	6.17 - 11.005	6.232 - 10.32
	Max. output torque T_{rms} in kNm	173.5	270	484	700

DMG2		Gear unit size			
		18	**22**	**25.4**	**30**
Output pinion	Tooth width b_1 in mm	480	580	660	780
	Module m in mm	18	22	25.4	30
	Number of teeth z_1	31	31	31	31
Girth gear	Max. tooth width b_{2max} in mm	475	575	655	770
	Max. number of teeth z_{2max}	600	600	600	600
a in mm		1,206	1,428	1,600	1,990
a_1 in mm		1,768	2,065	2,325	2,870
b in mm		1,350	1,700	1,900	2,375
d_1 (n6) in mm		140	170	190	230
l_1 in mm		230	250	295	380
E in mm		911	1,097	1,224	1,555
G_1 in mm		750	790	930	1,100
h in mm		1,060	1,200	1,450	1,845
H in mm		2,275	2,620	3,140	3,885

Table B-1: Dimensions and torques DMG2

DMG3		Gear unit size		
		18	**22**	**25.4**
Gear unit	Ratio i	5.06 - 10.10	5.68 - 11.56	4.97 - 12.62
	Max. output torque T_{rms} in kNm	173.5	270	484
Output pinion	Tooth width b_1 in mm	480	580	660
	Module m in mm	18	22	25.4
	Number of teeth z_1	31	31	31
Girth gear	Max. tooth width b_{2max} in mm	475	575	655
	Max. number of teeth z_{2max}	600	600	600
a in mm		1,206	1,428	1,600
a_1 in mm		1,768	2,065	2,325
b in mm		1,350	1,700	1,900
d_1 (n6) in mm		140	170	190
l_1 in mm		230	250	295
E in mm		911	1,097	1,224

DMG3	Gear unit size		
	18	**22**	**25.4**
G_1 in mm	750	790	930
h in mm	1,060	1,200	1,450
H in mm	2,275	2,620	3,140

Table B-2: Dimensions and torques DMG3

Further information

Further information about these technical data can be found in the separate data sheet and the dimension drawings in the complete documentation for the gear unit.

B.2 General technical data

Rating plate

The rating plate of the gear unit contains the most important technical data.

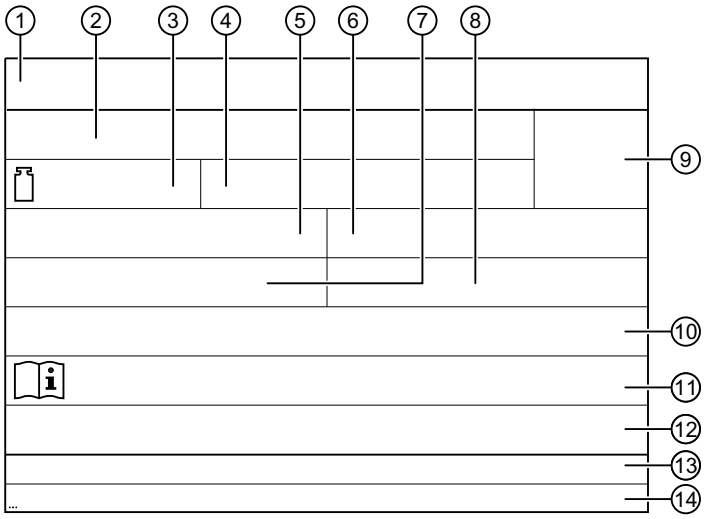

Figure B-2: Rating plate

① Company logo
② Serial no.: Plant code / order no.-item ser. no. / year of manufacture
③ Total weight in kg
④ For special information
⑤ Model, size
⑥ Power specification P_2 in kW or torque T_2 in Nm
⑦ Speed n_1
⑧ Speed n_2
⑨ Optional DMC (Data Matrix Code)
⑩ Oil data: Oil type, oil viscosity, oil quantity
⑪ Number(s) of instructions, including issue date
⑫ For special information
⑬ Manufacturer details / Country of origin
⑭ Hotline

The limits of the intended use of the gear unit are defined on the basis of these data and the contractual agreements concerning the gear unit concluded between Flender and the customer.

Further information

Further information about these technical data can be found in the separate data sheet and the dimension drawings in the complete documentation for the gear unit.

You can find additional information about all major accessories including their technical data and control instructions in the order-specific list of equipment in the complete documentation for the gear unit.

Structure of gear unit markings

Field 5 of the rating plate contains the gear unit markings. The following table explains the meaning of each letter and number.

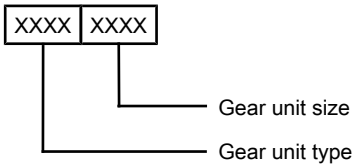

Figure B-3: Structure of gear unit markings

Gear unit type

DMG2	Girth gear units for tube mills
DMG3	Girth gear units for tube mills

Gear unit size

18	Gear unit size 18, 22, 25.4, 30

Further information

Further information about these technical data can be found in the separate data sheet and the dimension drawings in the complete documentation for the gear unit.

B.3 Ambient temperature

Unless otherwise contractually agreed, the gear unit must not be exposed to any harmful atmospheres or substances such as aggressive chemical products. By applying various suitable measures, the gear unit can be used in the ambient temperature range extending from 0 °C up to 40 °C. However, this must always be authorised by Flender and specified in the order text.

B.4 Weights

The precise weights are specified in the dimension drawings in the complete documentation or on the rating plate.

All weight specifications refer to units without oil filling or mounted components.

Refer to the following table for gear unit weights (approximate values, in kg):

Type	Gear unit size			
	18	22	25.4	30
DMG2	16,000	23,500	36,000	69,000
DMG3	16,000	22,000	37,000	-

Table B-3: Weights

B.5 Enveloping surface sound pressure level

It is not possible to specify an enveloping surface sound pressure level for a gear unit in operation because the unit is operated under no load on the Flender test stand during the trial run.

B.6 Terminal diagram

Depending on the specific order, electrical components are installed on the gear unit, which is pre-wired in one or more terminal boxes.

Further information

Further information can be found in the list of equipment and terminal diagram provided in the complete documentation for the gear unit.

Further information about components can be found in the instructions for the components in the complete documentation for the gear unit.

Checklist for maintenance and servicing

C

Check the following points, and list the results in the table.

Date				
Time				
Operating hours				
Power drawn by the main motor in kW (over a period of 5 min)	max.			
	min.			
Position of the floating shaft in mm				
Vibration velocity at the measuring point 1 in mm/s				
Bearing temperature at the measuring point in °C	1			
	2			
	3			
Oil temperature in the pipe in °C				
Oil pressure in the pipe	Bottom			
	Top			
Others (for example, noise, machine damage, environmental conditions, etc.)				
Change the filter cartridge				
Oil change				
Stop the system				
Start the system				
Signature				

Table C-1: Check list 1

Index

A

Attachment points, 31

B

Bearing monitoring
    Resistance thermometer, 25

C

Checking procedure, 55
Coloured markings, 16
Contamination limits, 63
Copyright, 13
Coupling
    Alignment, 45
    Mounting, 44

D

Danger of explosion, 20
Dimensions, 77
Disposal, 71
Documentation landscape, 13

E

Environmental protection, 71

F

Fastening bolt, mating thread, 39
Fastening bolts, 65
Fastening bolts, screws, 39
Fault, 65
Fault rectification, 66
Fault-finding, 65
Final work, 49
Flushing, 52

G

Gear unit markings, 16
Gear unit use, 20
General inspection of the gear unit, 65

I

Inductive sensor, 25
Integration note, 21
Interval, 61
Irregularities in operation, 59

L

Labyrinth seal, 24
Liability disclaimer, 12
Lubricant, 14

M

Maintenance, 61
Maintenance information, 61
Maintenance schedule, 61
Measures
    Checking procedure, 55
    During commissioning, 56
    Prior to commissioning, 51, 52
Mounting position, 31

N

Notes regarding assembly, 31

O

Oil, 14
    Contamination limits, 63
Oil supply system
    Commissioning, 55
Operating values, 59
    Oil, 59
Ordering spare parts, 73

P

Preservation
    Special aspects, 30
Protective equipment, 18

R

Rating plate, 79
    Example of model and size, 80
Resistance thermometer connection, 48

Rolling-contact bearings
Measure temperature, 64

S

Safety rules, 15
Scope of delivery, 27
Servicing, 64
Servicing activities, 61
Shaft bearings, 24
Shaft seal, 24
Shipping documents, 27

T

Taking out of service, 60
Technical specifications, 79
Torques, 77
Transport conditions, 28
Transport note, 27
Transport symbol, 28
Types of danger, 17

U

Unpacking, 33
Used oil, 71

W

Warning symbols, 17

FLENDER GEAR UNITS

Girth gear units for tube mills
Assembly and machine instructions A5150-01en
Version 10/2023

Flender GmbH
Alfred-Flender-Strasse 77
46395 Bocholt
Germany

FLENDER