FLENDER COUPLINGS

N-ARPEX

Assembly and operating instructions M8714-01en
Version 07/2026

ARN-6, ARN-8, ARN-10



flender.com

FLENDER

Original assembly and operating instructions

M8714-01
Version 07/2026

45035996662449931-V6
TU-
03/09/2026
12:14:34

Copyright (©2026 Flender GmbH)

Table of contents

1 Introduction 11

1.1 Legal information 11

1.2 About these instructions 12

1.3 Text attributes 13

1.4 Copyright 13

2 Safety information 15

2.1 General information 15

2.2 Intended use 17

2.2.1 Rated torques, maximum torques, overload torques and friction-locked connections 17

2.2.2 Coupling service life 18

2.3 Safety information for a coupling when used in potentially explosive atmospheres 18

2.3.1 Marking 19

2.3.2 Conditions of use 19

2.4 General warning notices 20

3 Description 23

4 Application planning 29

4.1 Transport of the coupling 29

4.2 Storage of the coupling 29

5 Assembly 31

5.1 Preparatory work 31

5.1.1 Mill the finished bore 32

5.1.2 Mill the parallel keyway 33

5.1.3 Machining an axial locking mechanism 33

5.1.4 Balancing the coupling 34

5.2 Mounting the coupling 35

5.2.1 Assembling the hubs 36

5.2.1.1 Mounting hubs with shaft-hub connection using a parallel key 36

5.2.1.2 Assembling hubs with shaft and hub connected through a pressurised oil interference fit, warm fitting 37

5.2.1.3 Assembling hubs with shaft and hub connected through a pressurised oil interference fit, cold fitting 38

5.2.1.4 Assembling the clamping hubs 39

5.2.2 Assembling couplings that are integrally balanced 41

5.2.3 Aligning the units ... 42
5.2.4 Assembling the sleeve ... 43
5.2.5 Assembling the intermediate unit ... 43
5.2.6 Assembling the plate pack ... 47

6 Commissioning ... 49

7 Operation ... 51

7.1 Normal operation of the coupling ... 51
7.2 Faults – causes and rectification ... 51
7.2.1 Procedure in the event of faults ... 51
7.2.2 Identifying the fault cause ... 51
7.2.2.1 Possible faults ... 52
7.2.2.2 Possible causes ... 53
7.2.2.2.1 Unsuitable coupling ... 53
7.2.2.2.2 Assembly-related causes ... 53
7.2.2.2.3 Maintenance-related causes ... 53
7.2.2.2.4 Specific assembly-related and maintenance-related causes ... 54
7.2.3 Correcting faults ... 54
7.2.3.1 Replacing the plate pack ... 54
7.2.3.2 Correcting the changed alignment ... 54

8 Maintenance ... 55

8.1 Maintenance intervals ... 55
8.2 Replacing the plate pack ... 55
8.3 Dismantling the coupling ... 56
8.3.1 Disassembling the sleeve ... 57
8.3.2 Disassembling the intermediate unit ... 58
8.3.3 Disassembling the hubs ... 58
8.3.3.1 Disassembling hubs with shaft-hub connection through a parallel key ... 59
8.3.3.2 Disassembling the hub with shaft and hub connected through a pressurised oil interference fit ... 59
8.3.3.3 Disassembling the clamping hubs ... 61

9 Service and support ... 63

9.1 Contact ... 63

10 Disposal ... 65

11 Replacement parts ... 67

11.1 Ordering replacement parts ... 67
11.2 Spare parts drawing and spare parts list ... 67
11.2.1 Model NEN / NHN / NZN ... 68

11.2.2 Model BEB ... 69
11.2.3 Model BEN ... 70
11.2.4 Model MCECM / MCHCM / MCZCM ... 71
11.2.5 Model MFEFM / MFHFM / MFZFM ... 72
11.2.6 Screw plug ... 73
11.2.7 Additional hubs ... 74
11.2.7.1 Clamping hub, complete ... 74

A Technical specifications ... 75

A.1 Torques, speeds, geometry data and weights ... 75
A.1.1 Dimension drawing of model NEN / NHN / NZN ... 76
A.1.2 Technical data of model NEN / NHN / NZN ... 76
A.1.3 Dimension drawing of model BEB ... 78
A.1.4 Technical data of model BEB ... 79
A.1.5 Dimension drawing of model BEN ... 80
A.1.6 Technical data of model BEN ... 80
A.1.7 Dimension drawing of model MCECM / MCZCM ... 81
A.1.8 Technical data of model MCECM / MCHCM / MCZCM ... 82
A.1.9 Dimension drawing of model MFEFM / MFHFM / MFZFM ... 84
A.1.10 Technical data of model MFEFM / MFHFM / MFZFM ... 84
A.1.11 Dimension drawing of the complete clamping hub ... 86
A.1.12 Technical data of the complete clamping hub ... 87

A.2 Shaft misalignment values during operation ... 89

A.3 Tightening torques and widths A/F ... 91
A.3.1 Bolt connection C flange with the M hub ... 91
A.3.2 Bolt connections F flange with the M hub ... 92
A.3.3 Bolt connection of the complete clamping hub ... 93

A.4 Tightening procedure ... 94

A.5 Lubricant ... 94

B Declaration of conformity ... 95

B.1 EU Declaration of Conformity ... 95

List of tables

Table 2-1 General warnings 15

Table 2-2 Temperature classes for explosive atmospheres as a result of gases, vapours or mists 19

Table 4-1 Types of preservative agents for long-term storage 30

Table 5-1 Recommended assigned fits for bores with parallel key connection 32

Table 5-2 Threaded hole, tightening torque and width A/F for the B hub, N hub and the M hub 34

Table 7-1 Table of faults 52

Table 11-1 Spare parts list for models NEN / NHN / NZN 68

Table 11-2 Replacement parts list for model BEB 69

Table 11-3 Replacement parts list for model BEN 70

Table 11-4 Spare parts list for models MCECM / MCHCM / MCZCM 71

Table 11-5 Spare parts list for model MFEFM / MFHFM / MFZFM 72

Table 11-6 Spare parts list for models KEK, KEN, KHK, KHN, KZK, KZN, or BEK 74

Table A-1 Rated torques, speeds, geometry data and weights of model NEN / NHN / NZN 76

Table A-2 Torques, speeds, geometry data and weights of model BEB 79

Table A-3 Torques, speeds, geometry data and weights of model BEN 80

Table A-4 Torques, speeds, geometry data and weights of models MCECM / MCHCM / MCZCM 82

Table A-5 Torques, speeds, geometry data, and weights of the model MFEFM / MFHFM / MFZFM 84

Table A-6 Speeds, geometry data and weights of the complete clamping hub 87

Table A-7 Maximum torque that can be transmitted by the clamping hub depending on the finished bore 88

Table A-8 Maximum permissible shaft misalignment values during operation 89

Table A-9 Tightening torques and widths across flats for the bolt connection C flange with the M hub 91

Table A-10 Tightening torques and widths across flats for the bolt connection F flange with the M hub 92

Table A-11 Tightening torques and widths across flats for the bolt connection of the complete clamping hub 93

Table A-12 Tightening procedure 94

List of figures

Figure 3-1 Model NEN 24
Figure 3-2 Model MCECM 25
Figure 3-3 Model MFEFM 25
Figure 3-4 Plate design 26
Figure 3-5 Detailed view of the fitting bolt connection 27
Figure 3-6 Detailed view of the conical bolt connection 27
Figure 4-1 Transport symbols 29
Figure 5-1 Tolerances for finished bore 33
Figure 5-2 Position of the balancing bore for single-plane balancing 35
Figure 5-3 Position of the balancing bore for two-plane balancing 35
Figure 5-4 Complete clamping hub assembly unit (12) or (22) 41
Figure 5-5 Marking for total balancing as assembly 42
Figure 5-6 Installing intermediate unit CEC / CHC / CZC 45
Figure 5-7 Install intermediate unit FEF / FHF / FZF 46
Figure 8-1 Detailed view of the fitting bolt connection 56
Figure 8-2 Detailed view of the conical bolt connection 57
Figure 8-3 Complete clamping hub assembly unit (12) or (22) 62
Figure 11-1 Spare parts drawing, model NEN / NHN / NZN 68
Figure 11-2 Spare parts drawing, model BEB 69
Figure 11-3 Spare parts drawing, model BEN 70
Figure 11-4 Spare parts drawing, model MCECM / MCHCM / MCZCM 71
Figure 11-5 Spare parts drawing, model MFEFM / MFHFM / MFZFM 72
Figure 11-6 Screw plug 73
Figure A-1 Model NEN / NHN / NZN 76
Figure A-2 Model BEB 78
Figure A-3 Model BEN 80
Figure A-4 Model MCECM / MCHCM / MCZCM 81

Figure A-5 Model MFEFM / MFHFM / MFZFM 84

Figure A-6 Clamping hub 86

Introduction 1

1.1 Legal information

Warning system

These instructions contain information you must observe for your own personal safety as well as to avoid damage to property and persons. The information regarding your personal safety is highlighted with a warning triangle. Information exclusively regarding property damage alone is not marked with a warning triangle. Depending on the hazard class, the warnings shall be depicted as follows, in descending order.

⚠ DANGER

means that death or severe physical injury **will** occur if the relevant precautionary measures are not taken.

⚠ WARNING

means that death or severe physical injury **may** occur if the relevant precautionary measures are not taken.

⚠ CAUTION

means that mild physical injury may occur if the relevant precautionary measures are not taken.

NOTE

means that damage to property may occur if the relevant precautionary measures are not taken.

If multiple hazard classes come into play, the warning for the highest level in question shall always be used. If a warning containing the warning triangle warns of harm to individuals, the same warning may also include a warning regarding damage to property.

Information

Information

Information offers additional notes, assistance and tips for handling the product.

Qualified personnel

The product/system associated with this documentation may only be used by **qualified personnel** trained to perform the relevant tasks, taking into account the associated documentation for the relevant tasks, particularly the safety information and warnings included therein. Due to their qualification and experience, qualified personnel are capable of detecting risks and avoiding potential hazards when dealing with these products/systems.

Intended use of Flender products

Please note the following:

⚠ WARNING

Flender products are only suitable for the uses set out in the catalogue and associated technical documentation. If third-party products and components are used, these must be recommended and/or authorised by Flender. Safe and flawless operation of the products requires proper transport, proper storage, setup, assembly, installation, commissioning, operation and maintenance. The permissible environmental conditions must be adhered to. Instructions in the associated documentation must be followed.

Trademarks

All designations marked with the trademark symbol ® are registered trademarks of Flender GmbH. Other designations in this document may be trademarks whose use by third parties for their own purposes may violate the rights of the owner.

Liability disclaimer

We have assessed the contents of these instructions for compliance with the hardware and software described. However, deviations cannot be ruled out, so we are unable to accept liability for full compliance. The details in these instructions are regularly reviewed and necessary corrections are contained in subsequent editions.

1.2 About these instructions

These instructions describe the coupling and provide information about its handling – from assembly to maintenance. Keep these instructions for later use.

Read these instructions prior to handling the coupling. The instructions should be observed.

1.3 Text attributes

In addition to the warnings that you must observe for safety reasons, you will find the following text features in these instructions:

1. Procedural instructions are shown as a numbered list. Always perform the steps in the order given.

- Lists are formatted as bulleted lists.
  - The dash is used for lists at the second level.

(1) Numbers in brackets are part numbers.

1.4 Copyright

The copyright of these instructions is held by Flender.

These instructions must not be used wholly or in parts without our authorisation or be given to third parties.

If you have any technical queries, please contact our factory or one of our service outlets (refer to Service and support (Page 63)).

Safety information 2

2.1 General information

Instructions

These instructions include all of the important information necessary for using this product safely. Ensure that the valid operating instructions are available for all work on the coupling. The currently valid operating instructions are available for download on the website of Flender GmbH (http://www.flender.com/). Earlier versions of the operating instructions are available upon request.

Please make sure that every person who is commissioned to work on the coupling has read and understood these instructions prior to handling the coupling and observes all of the points.

Only the knowledge of these instructions can avoid faults on the coupling and ensure fault-free and safe operation. Non-adherence to the instructions can cause product or property damage and/or personal injury. Flender does not accept any liability for damage or operating failures that are due to non-adherence to these instructions.

These instructions apply to couplings that can be used in potentially explosive atmospheres as well as in atmospheres that are not potentially explosive.
If you use the coupling in potentially explosive atmospheres, the coupling must have a corresponding marking. The declaration of conformity in the annex only applies to these couplings.

State of the art

The coupling described here has been designed in consideration of the latest findings for demanding technical requirements. This coupling is state-of-the-art at the time of printing these instructions.

In the interest of further development, Flender reserves the right to make such changes to the individual assembly units and accessories that increase performance and safety while maintaining the essential features.

Symbols

ISO	ANSI	Warning
		Warning – hazardous electrical voltage
		Warning – explosive substances
	---	Warning – entanglement hazard

ISO	ANSI	Warning
	---	Warning – hot surfaces
	---	Warning – corrosive substances
	---	Warning – suspended load
	---	Warning – hand injuries
		Explosion protection approval

Table 2-1 : General warnings

Integration of the couplings in the drive system

The coupling is used to connect the drive and the output shaft to transmit torque; it is classified as a structural component of the drive system. The coupling is not considered a standalone machine, a partly completed machine or a safety component. The coupling will therefore not be issued an EU Declaration of Conformity.

Explosion Protection Directive

The term “Explosion Protection Directive” used in these instructions refers to the harmonization legislation of the European Union relating to equipment and protective systems intended for use in potentially explosive atmospheres complied with in accordance with the co-applicable EU Declaration of Conformity.

Protective clothing

In addition to the generally prescribed personal protective equipment (safety shoes, overalls, helmet, etc.), also wear suitable protective gloves and safety glasses when handling the coupling.

Using the coupling

The relevant occupational safety and environmental protection regulations must be complied with at all times during transport, assembly, installation, dismantling, operation and maintenance of the coupling.

Only qualified personnel may operate, assemble, maintain and repair the coupling. Information about qualified personnel can be found in the legal notes at the beginning of these instructions.

If hoisting gear or load lifting devices are used for transporting, these have to be suitable for the weight of the coupling.

If the coupling has visible damage, it may not be assembled or put into operation.

The coupling may only be operated in a suitable housing or with touch protection according to applicable standards. This also applies to test runs and rotational direction checks.

Work on the coupling

Only carry out work on the coupling when it is not in operation and is not under load.

Ensure that the drive aggregate cannot be inadvertently switched on. Attach an information notice to the start switch stating clearly that work is being carried out on the coupling. Ensure that the entire unit is not under load.

2.2 Intended use

Only use the coupling according to the conditions specified in the service and delivery contract and the technical data in the annex. Deviating operating conditions are considered improper use. The user or operator of the machine or system is solely liable for any resulting damage.

When using the coupling please specifically observe the following:

- Do not make any modifications to the coupling that go beyond the permissible machining described in these instructions. This also applies to touch protection equipment.
- Use only original replacement parts from Flender. Flender only accepts liability for original replacement parts from Flender.
  Other spare parts are not tested and approved by Flender. Non-approved replacement parts may possibly change the design characteristics of the coupling and thus impact active and/or passive safety.
  Flender will accept no liability or warranty whatsoever for damage occurring as a result of the use of non-approved spare parts. The same applies to any accessories that were not supplied by Flender.

If you have any queries, please contact our Customer Service (see Service and support (Page 63)).

2.2.1 Rated torques, maximum torques, overload torques and friction-locked connections

Rated torque

Rated torques T_{KN} are listed in the technical data for the particular model in Section Torques, speeds, geometry data and weights (Page 75).

Maximum torques

Maximum torque T_{max} is the largest load that acts on the coupling in normal operation.

Maximum torque T_{max} is permissible up to 5-times per hour, and must be less than the coupling maximum torque T_{Kmax}.

The maximum coupling torque T_{Kmax} is 2-times the rated torque T_{KN}.

On the ARN-10 series, the maximum coupling torque T_{Kmax} is 1.75-times the rated torque T_{KN}.

Overload torques

Overload torque T_{OL} is the highest load that acts on the coupling for special, infrequent operating conditions. The overload state must not last longer than a fraction of a second.

Overload torque T_{OL} is permissible up to 1-time per month, and must be less than the coupling overload torque T_{KOL}.

The coupling overload torque T_{KOL} is 2.5-times the rated torque T_{KN}.

On the ARN-10 series, the coupling overload torque T_{KOL} is 2.25-times the rated torque T_{KN}.

Information

Carry out a visual inspection if an overload torque has occurred.

Friction-locked connections in potentially explosive atmospheres

Shaft-hub connections using a pressurised oil interference fit or clamping hub connections belong to friction-locked connections.

In potentially explosive atmospheres, the maximum torque that can occur in operation must not exceed the maximum torque that can be transmitted using the friction-locked connection.



⚠ WARNING

Risk of explosion when the maximum torque that can be transmitted by the friction-locked connection is exceeded

Refer to the dimension drawing provided for the maximum torque of the pressurised oil interference fit that can be transmitted.

Refer to Section Technical data of the complete clamping hub (Page 87) for the maximum clamping hub connection torque that can be transmitted.

2.2.2 Coupling service life

N-ARPEX couplings are not subject to any wear. The couplings have an unlimited service life when professionally and correctly mounted and when used as intended.

2.3 Safety information for a coupling when used in potentially explosive atmospheres

Information

Declaration of conformity

A declaration of conformity required depending on the corresponding Explosion Protection Directive/Regulations can be found in Chapter Declaration of conformity (Page 95).

2.3.1 Marking

You can find an illustration of the coupling parts in Chapter Description (Page 23).

A coupling designed in accordance with the Explosion Protection Directive has a marking on the coupling parts.

Maximum marking

The maximum marking according to the Explosion Protection Directive appears as shown below:

Flender GmbH	CE	II 2G Ex h IIC T6 ... T2 Gb X
D 46393 Bocholt		II 2D Ex h IIIC T85 °C ... 280 °C Db X
ARPEX	<Year of manufacture>	I M2 Ex h Mb X

Reduced marking

A reduced marking may be affixed due to structural conditions. The reduced marking is representative of the maximum markings listed above.

2.3.2 Conditions of use

A coupling designed in accordance with the Explosion Protection Directive is suitable for the following conditions of use:

- Device group I (permissible ambient temperature range -60 °C to +150 °C)
  - Category M2
- Device group II (permissible ambient temperature range -60 °C to +260 °C)
  - Category 2 and 3
  - Group of substances G, zone 1 and 2
  - Group of substances D, zone 21 and 22
  - Explosion group IIA, IIB and IIC

1. Gases, vapours or mists

Check the ambient temperature for use of the coupling in the relevant temperature class.

The maximum surface temperature of the coupling for a potentially explosive atmosphere as a result of gas/vapour/mist mixtures is obtained from the maximum ambient temperature and/or the maximum temperature of the adjacent components. The self-heating of the coupling is minor. In normal atmospheric conditions for explosion protection applications, a maximum surface temperature <85 °C can be expected.

Max. ambient temperature	Temperature class	Max. surface temperature
-60 °C to +260 °C	T2	<280 °C
-60 °C to +180 °C	T3	<200 °C

Max. ambient temperature	Temperature class	Max. surface temperature
-60 °C to +115 °C	T4	<135 °C
-60 °C to +80 °C	T5	<100 °C
-60 °C to +65 °C	T6	<85 °C

Table 2-2 : Temperature classes for explosive atmospheres as a result of gases, vapours or mists

2. Dust/air mixtures

Check the ambient temperature.

The maximum surface temperature of the coupling for a potentially explosive atmosphere as a result of dust/air mixtures is obtained from the maximum ambient temperature and/or the maximum temperature of the adjacent components. The self-heating of the coupling is minor. In normal atmospheric conditions for explosion protection applications, a maximum surface temperature <85 °C can be expected.

Notes concerning operation of the coupling in potentially explosive atmospheres

- Only use the coupling underground in mines in potentially explosive atmospheres together with drive motors that can be switched off in the event of the formation of an explosive atmosphere.
- Earth machines that are connected via the coupling with a leakage resistance of less than 10^6 Ω.
- If you want to use a coated coupling in potentially explosive atmospheres, please note the requirements concerning the conductivity of the paint and the limitation on the paint layer thickness applied in accordance with EN 80079-36. No build-up of electrostatic charges is to be expected with a paint layer thickness of less than 200 µm.

2.4 General warning notices



⚠ DANGER

Risk of explosion if not used as intended

The coupling can burst. There is a risk of fatal injury from flying fragments. Personal injury, property damage and fire damage caused by sparks may occur. If a coupling bursts in an area at risk of explosion, then this can result in an explosion.

- Use the coupling for the purpose for which it is intended.



⚠ DANGER

Risk of explosion when using coupling parts without Ex marking

Coupling parts without Ex marking have not been approved for use in potentially explosive atmospheres. These coupling parts can lead to an explosion during operation. There is a risk to life.

- Only use couplings with Ex marking in potentially explosive atmospheres.



⚠ DANGER

Risk of explosion due to the use of unsuitable and/or damaged components

The use of unsuitable and/or damaged components can lead to an explosion in potentially explosive atmospheres. There is a risk to life.

- Observe the information regarding conditions of use.



⚠ DANGER

Risk of explosion due to improper operation

Improper operation of the coupling can lead to an explosion in potentially explosive atmospheres. There is a risk to life.

- Please observe the notes concerning operation of the coupling in potentially explosive atmospheres.



⚠ DANGER

Risk of explosion from hot coupling parts

Risk of burns on hot surfaces. Hot coupling parts can lead to an explosion in potentially explosive atmospheres. There is a risk to life.

- Wear suitable protective equipment (gloves, safety glasses).
- Make sure that the area is not at risk of explosion.



⚠ WARNING

Risk of chemical burns due to chemical substances

There is a risk of chemical burns when handling aggressive cleaning agents.

- Please observe the manufacturer's information on how to handle cleaning agents and solvents.
- Wear suitable protective equipment (gloves, safety goggles).



⚠ WARNING

Risk of crushing due to falling components

Falling components can cause crushing, serious injury and death. The components can be damaged.

- Secure the components to prevent them from falling
- Only use suitable and technically flawless hoisting gear and load lifting attachments.
- Only use hoisting gear and load lifting attachments with sufficient load-bearing capacity.

Description 3

The N-ARPEX couplings described here are torsionally rigid multiple-disc couplings that are free of torsional backlash and are available in various models and sizes. The couplings can be used in accordance with the Explosion Protection Directive in potentially explosive atmospheres if they have a marking.

These instructions describe mounting and operating an N-ARPEX coupling in a horizontal arrangement. The shaft-hub connection is available in the following versions:

- Shaft-hub connection using a cylindrical or tapered bore with parallel key according to DIN 6885/1.
- Shaft-hub connection using a cylindrical or tapered bore with pressurised oil interference fit.
- Shaft-hub connection using a clamping hub.

Please consult Flender if you want to use a different model of installation.

Application

N-ARPEX couplings are designed for use in all kinds of machines.

The version with an E sleeve as an intermediate sleeve is available for each model of the N-ARPEX couplings. The E sleeve is machined on all sides in accordance with the specifications of the API 671.

An H sleeve is used for a large distance between shafts S and the correspondingly long intermediate sleeve. The H sleeve is left in the delivery condition on the inside and outside diameter of the tube and does not therefore meet the specifications of the API 671. If a coupling is implemented with an H sleeve instead of an E sleeve, the designation of the model changes. An NEN becomes an NHN, and an MFEFM becomes an MFHFM.

Like the H sleeve, the Z sleeve is used especially for longer shaft distances (up to 6,500 mm). The difference to the H sleeve is an enlarged tube diameter to increase the critical bending speed and the torsional rigidity of the coupling. Z sleeves are supplied with an unprocessed, primed sleeve tube. If a coupling is implemented with a Z sleeve instead of an E sleeve, the designation of the model changes. An NEN becomes an NZN, and an MFEFM becomes an MFZFM.

B hubs are only combined with an E sleeve.

Structure

N-ARPEX couplings are all-steel couplings. Plate packs are arranged between the flanges, which are bolted with one another on alternating sides.

The plate packs comprise ring plates or segmented plates of the hexagonal, octagonal and decagonal models that are crimped together.

In the ARN-6 series, fitting bolts and nuts are used to connect the plate packs to the flanges. In the ARN-8 and ARN-10 series, tapered bolts and nuts/hexagon bolts are used to connect the plate packs to the flanges.

On all series, a capture assembly secures the sleeve if the plates were to break.

The N-ARPEX coupling is torsionally stiff and transmits the torque without any backlash through the plate pack arrangement. The coupling can absorb axial, radial and angular misalignment of the connected loads.

The diagrams show the ARN-6 series models NEN, MCECM and MFEFM with their components and the associated part numbers, plate design and the various bolt connections of the plate packs.

Additional models are shown in Section Spare parts drawing and spare parts list (Page 67).

For the components of the plate packs, refer to the associated mounting instructions provided in Section Assembling the plate pack (Page 47).

Model NEN

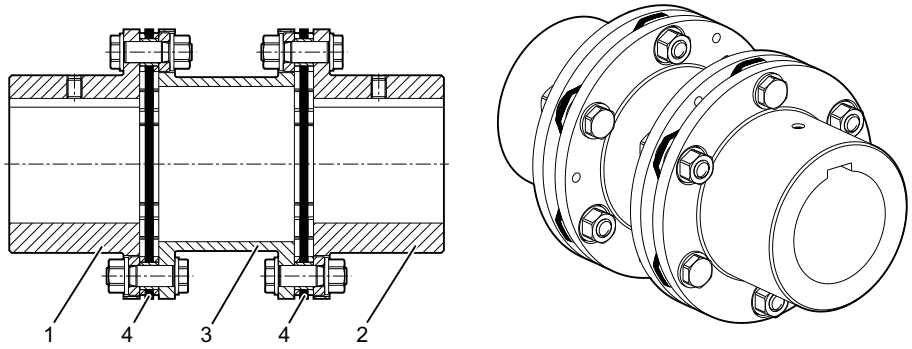

Figure 3-1: Model NEN

1 N hub
2 N hub
3 E sleeve
4 Plate pack

Model MCECM

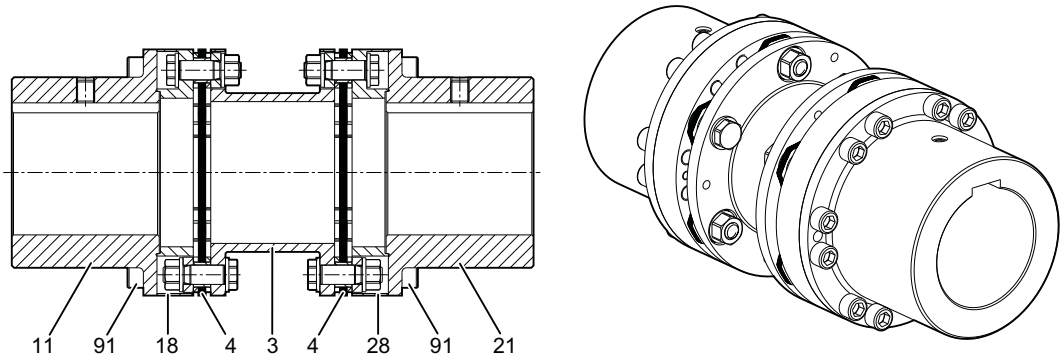

Figure 3-2: Model MCECM

3	E sleeve
4	Plate pack
11	M hub
18	C flange
21	M hub
28	C flange
91	Bolt

If not expressly ordered in any other way, intermediate unit CEC (18; 4; 3; 4; 28) is supplied already mounted.

Model MFEFM

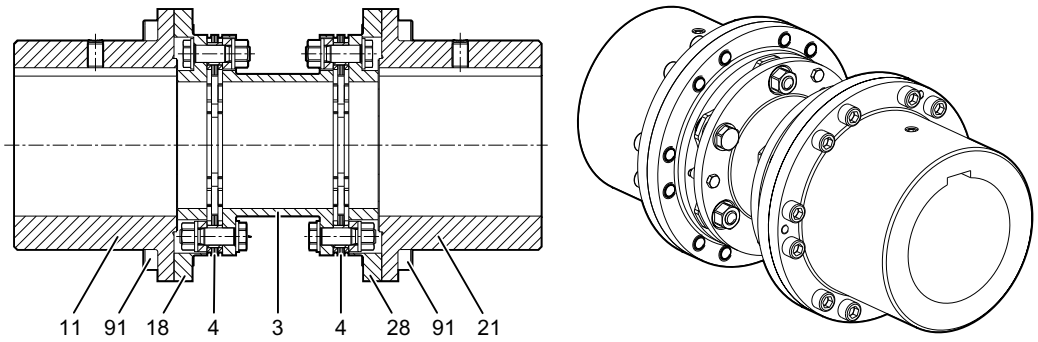

Figure 3-3: Model MFEFM

3	E sleeve
4	Plate pack
11	M hub
18	F flange
21	M hub
28	F flange
91	Screw: as of size 291-6: Fitting bolts (91) and nuts (92)

If not expressly ordered in any other way, intermediate unit FEF (18; 4; 3; 4; 28) is supplied already mounted.

Plate design

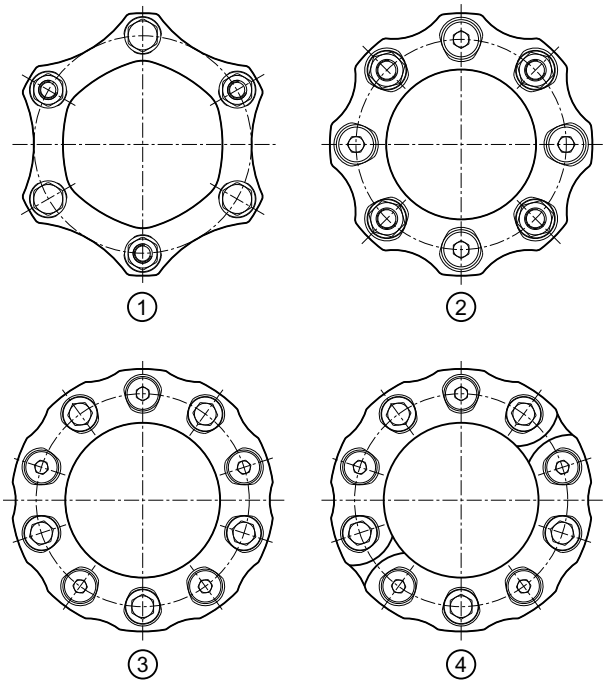

Figure 3-4: Plate design

① Ring plate, hexagonal
② Ring plate, octagonal
③ Ring plate, decagonal, as of size 631-10
④ Segmented plate, decagonal, as of size 694-10

Bolted joint of the plate pack

The bolt connection of the plate pack varies depending on the model and size.

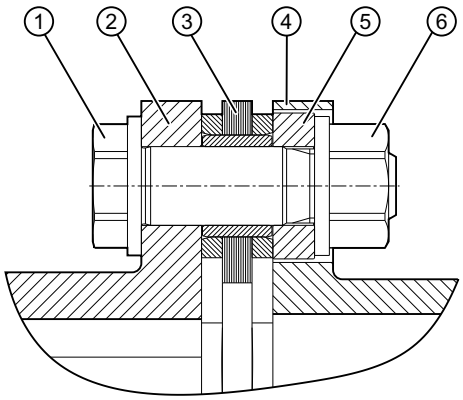

Figure 3-5: Detailed view of the fitting bolt connection

Model ARN-6

① Fitting bolt
② Flange
③ Plate pack
④ Flange
⑤ Guard ring
⑥ Nut

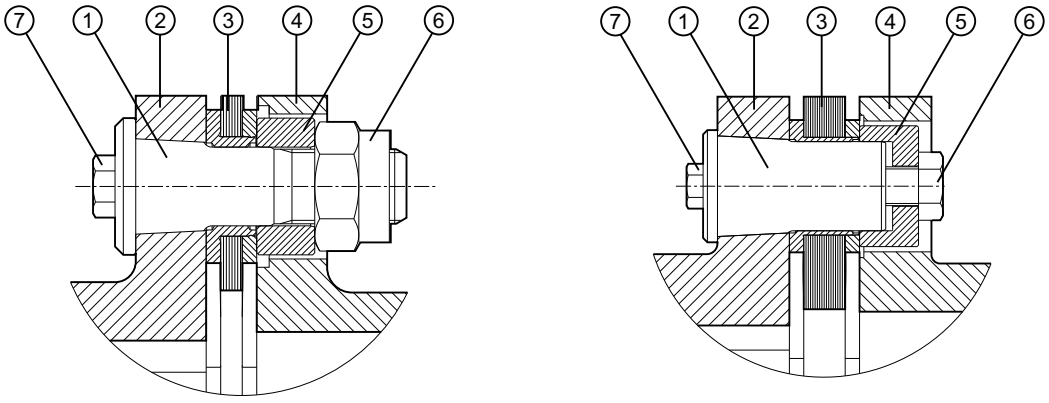

Figure 3-6: Detailed view of the conical bolt connection

Model ARN-8, sizes 219-8 to 354-8

① Tapered bolt
② Flange
③ Plate pack
④ Flange
⑤ Guard ring
⑥ Nut
⑦ Hexagon bolt

Model ARN-8, sizes 387-8 to 631-8
Model ARN-10, sizes 495-10 to 988-10

① Tapered bolt
② Flange
③ Plate pack
④ Flange
⑤ Guard ring
⑥ Tensioning screw
⑦ Hexagon bolt

Application planning 4

Check the delivery for damage and for completeness. Report any damage and/or missing parts to Flender immediately.

The coupling is delivered in individual parts and preassembled groups. Preassembled groups may not be dismantled.

4.1 Transport of the coupling



⚠ WARNING

Risk of crushing due to improper transport

Falling components can cause crushing, serious injury and death. The components can be damaged.

- Only use suitable and technically flawless hoisting gear and load lifting attachments.
- Only use hoisting gear and load lifting attachments with sufficient load-bearing capacity.
- The symbols on the packaging must be observed.

Unless otherwise agreed contractually, the packaging complies with the HPE Packaging Guidelines.



Figure 4-1: Transport symbols

4.2 Storage of the coupling

NOTE

Property damage due to improper storage

Negative changes to the physical properties of the coupling and/or coupling damage.

- Please observe the procedure for storing the coupling.

The coupling, unless not specifically ordered otherwise, is supplied with preservation and can be stored for up to 3 months.

Information about storing the coupling

Ensure that the storage room is dry (relative humidity < 65 %) and free of dust.

Ensure that there is no condensation.

Do not store the coupling together with corrosive chemicals, acids, caustic solutions, etc.

Store the coupling on suitable supports or in suitable containers.

Long-term storage

NOTE

Property damage due to improper long-term storage

Negative changes to the physical properties of the coupling and/or coupling damage.

- Please observe the procedure about long-term storage.

1. You can find the required model of preservative agent in the following table (types of preservative agents for long-term storage).
2. Clean the coupling parts.
3. Apply the stipulated preservative agent.
4. Store the coupling parts.

Preservative agent	Features	Indoor storage	Outdoor storage
Oil spray	Corrosion protection agent	Up to 12 months	Up to 4 months
Tectyl 846 or similar	Long-term preservative agent on wax basis	Up to 36 months	Up to 12 months
Emulsion cleaner + VCI foil	Active system, reusable	Up to 5 years	Up to 5 years

Table 4-1 : Types of preservative agents for long-term storage

Assembly 5

Assembly of the coupling comprises the following steps:

- Preparatory work (Page 31)
- Mounting the coupling (Page 35)



⚠ DANGER

Risk of explosion if specifications relating to assembly are not adhered to

If you do not observe the information stipulated here regarding assembly, this can lead to bursting of the coupling during operation. There is a risk of fatal injury from flying fragments. If a coupling bursts in an area at risk of explosion, then this can result in an explosion.

- Carefully observe all of the specifications relating to assembly.

Notes for assembling the coupling

- Only use undamaged components when assembling the coupling.
- Follow the assembly sequence.
- Please ensure that there is sufficient space at the assembly location and that the location is tidy and clean in order to be able to assemble and maintain the coupling without any risk.
- If a dimension drawing has been created for the coupling, please observe the information it contains as a matter of priority.

⚠ CAUTION

Cutting hazard due to sharp edges

Sharp edges on the parallel keyway and parallel key groove may cause hand injuries.

- Wear protective gloves.

5.1 Preparatory work

Please consult Flender if you want to machine a tapered finished bore.

Carry out the following steps if the coupling does not have a finished bore:

- Mill the finished bore (Page 32)
- Mill the parallel keyway (Page 33)
- Machining an axial locking mechanism (Page 33)
- Balancing the coupling (Page 34)

Information

The customer is responsible for execution of the finishing work on the coupling. Flender shall have no liability whatsoever for claims under warranty arising from finishing work that has not been carried out adequately.

5.1.1 Mill the finished bore

The diameter of the finished bore depends on the shaft used.

Recommended assigned fits

In the following table you can find the recommended assigned fits for bores with a parallel key connection.

Description	Interference fit									
	Suitable for reversing operation					not suitable for reversing operation				
Shaft tolerance	h6	k6	m6	n6	p6	h6	k6	m6	n6	p6
Bore tolerance	P7	M7	K7	J7	H7	N7	H7	H7	H7	F7

Table 5-1 : Recommended assigned fits for bores with parallel key connection

Bore diameter



DANGER

Risk of explosion if maximum bore diameter is exceeded

The coupling can burst. There is a risk of fatal injury from flying fragments. In an area at risk of explosion, a burst coupling may result in an explosion.

- Adhere to the maximum bore diameter specified.

The maximum diameters are listed in Section Torques, speeds, geometry data and weights (Page 75)

Procedure

1. Remove the preservation and clean the hubs to be machined.
2. Clamp the hub to the areas marked with ⌐ in the diagram below.
3. Machine the finished bore in accordance with the diagram below.

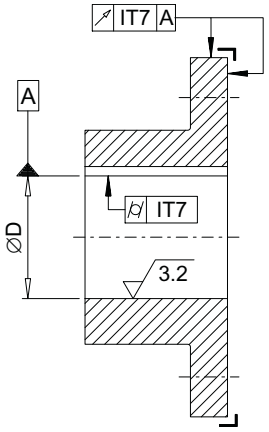

Figure 5-1: Tolerances for finished bore

5.1.2 Mill the parallel keyway

Position of the parallel keyway

Arrange the parallel keyway with sufficient clearance to the pulling-off holes.

Applicable standards

- For one parallel keyway, machine it according to DIN 6885/1 ISO P9.
- For two parallel keyways, machine them according to DIN 6885/1 ISO JS9.
- If you want to mill a parallel keyway that does not correspond to DIN 6885/1, please consult Flender.

5.1.3 Machining an axial locking mechanism

The hub is secured by a set screw or an end plate to prevent axial motion.

Please consult Flender if you want to use an end plate.

Note the following when using a set screw:

- Diameter and axial position of the threaded hole in the hub
- Position of the threaded hole with respect to the parallel keyway
- Selection of the set screw

Diameter and axial position of the threaded hole in the hub

The axial position of the threaded hole is in the centre of the hub.

The set screw size may be a maximum of 2/3 of the parallel keyway width.

The following table lists the tightening torques and the widths A/F for the set screws.

Threaded hole d_1	Tightening torque T_A Nm	Width across flats Hexagon socket wrench mm
M5	2	2.5
M6	4.8	3
M8	10	4
M10	17	5
M12	40	6
M16	80	8
M20	140	10
M24	240	12

Table 5-2 : Threaded hole, tightening torque and width A/F for the B hub, N hub and the M hub

Apply the specified tightening torques as listed in Section Tightening procedure (Page 94).

Position of the threaded hole with respect to the parallel keyway

The threaded hole for the set screw is positioned on the parallel keyway.

Selection of set screw

⚠ CAUTION

Risk of injury from protruding set screw

There is a risk of injury if the set screw protrudes out of the hub.

- Please observe the information about selecting the set screw.

Use set screws with hexagon socket and cup point in accordance with ISO 4029. The size of the set screw is determined by the threaded hole made. The set screw should fill out the threaded hole as much as possible and not protrude beyond the hub.

5.1.4 Balancing the coupling

Please note the following when balancing the coupling:

- Select the balancing quality according to the application (but at least G16 in accordance with DIN ISO 21940).
- Observe the balancing specification according to DIN ISO 21940-32.
- Machine the balancing bore on a large radius with adequate clearance to the flange bores and the outer contour.
- Carefully deburr the balancing bore.

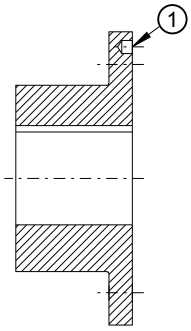

Figure 5-2: Position of the balancing bore for single-plane balancing

① Balancing bore

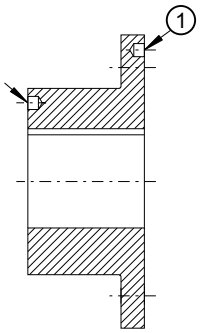

Figure 5-3: Position of the balancing bore for two-plane balancing

① Balancing bore

5.2 Mounting the coupling

NOTE

Property damage due to improper handling

Improper handling can damage the shaft ends, coupling and/or parallel keys.

- Ensure that you do not damage the bores with hoisting gear or similar equipment.
- Follow the handling instructions regarding assembling the coupling parts.

Assembly of the coupling comprises the following steps:

- Assembling the hubs (Page 36)
- Assembling couplings that are integrally balanced (Page 41)
- Aligning the units (Page 42)
- Assembling the sleeve (Page 43)
- Assembling the intermediate unit (Page 43)
- Assembling the plate pack (Page 47)

5.2.1 Assembling the hubs

NOTE

Damage to property

Damage to the shaft end, the hub and/or the parallel key.

- Note the handling instructions regarding assembling the hub.

The procedure for assembling the hubs varies depending on the selected shaft-hub connection.

- Mounting hubs with shaft-hub connection using a parallel key (Page 36)
- Assembling hubs with shaft and hub connected through a pressurised oil interference fit, warm fitting (Page 37)
- Assembling hubs with shaft and hub connected through a pressurised oil interference fit, cold fitting (Page 38)
- Assembling the clamping hubs (Page 39)

5.2.1.1 Mounting hubs with shaft-hub connection using a parallel key

Procedure

1. Unscrew the set screw until a collision with the parallel key or the shaft is no longer possible.
2. Clean the bores, shaft ends, fitting holes and contact surfaces.
3. Coat the bores of the hubs and the shafts with MoS_2 mounting paste (e.g. Microgleit LP 405).
4. Place the hubs on the shaft.



⚠ DANGER

Risk of explosion from incorrectly mounted hub with conical bore

If you do not observe the information stipulated here when assembling the hub with a conical bore, then this can cause the coupling to burst in operation. There is a risk of fatal injury from flying fragments. Bursting of the coupling can lead to an explosion in potentially explosive atmospheres.

- Mount the hubs with conical bore and parallel keyway on the shaft in the cold condition.
- Secure the hubs with suitable end plates without pulling the hubs further onto the taper (fitting dimension = 0) or according to the dimension drawing that is provided.

Information

Hubs with cylindrical bore

To make assembly easier, you can heat the hub with a cylindrical bore up to a maximum of 120 °C if required.

- Ensure that the area is not at risk of explosion.
- Protect adjacent components against damage and impermissible heating.

5. Secure the hubs using a set screw or an end plate. If secured with a set screw, the shaft must not protrude or be set back from the inner side of the hub.
6. Tighten the set screw or the screw to attach the end plate to the specified tightening torque T_A (for the set screw, please see Section Machining an axial locking mechanism (Page 33)).

5.2.1.2 Assembling hubs with shaft and hub connected through a pressurised oil interference fit, warm fitting

Shaft-hub connections using a pressurised oil interference fit belong to friction-locked connections.

In potentially explosive atmospheres, the maximum torque that can occur in operation must not exceed the maximum torque that can be transmitted using the friction-locked connection.



⚠ WARNING

Risk of explosion when the maximum torque that can be transmitted by the friction-locked connection is exceeded

Refer to the dimension drawing provided for the maximum torque of the pressurised oil interference fit that can be transmitted.

Procedure

1. Unscrew the screw plugs (10) and/or (20). You will find a description of the screw plugs in Section Screw plug (Page 73).
2. Clean the bores, shaft ends, fitting holes and contact surfaces.
3. Degrease and dry the bores and shaft ends.
4. Clean and dry the oil channels and the oil circulation grooves.
5. Protect adjacent components against damage and impermissible heating.
6. Heat up the hub to the temperature specified in the dimension drawing.
   Make sure that no dirt or contaminants can soil the bores again during the heating process.
7. Mount the hubs quickly on the shaft according to the instructions in the dimension drawing.
8. Secure the hubs to stop them from moving until they have cooled down.
9. Allow the hubs to cool down to the ambient temperature.
10. Use an end plate to secure the hubs that have a tapered pressurised oil interference fit or retaining nut.
11. In order to protect the oil channels of the hubs against corrosion, fill them with a suitable pressurised oil. Close the oil channels using the screw plugs (10) and/or (20).

5.2.1.3 Assembling hubs with shaft and hub connected through a pressurised oil interference fit, cold fitting



⚠ DANGER

Oil pressure in excess of maximum permissible value

The coupling can burst. There is a risk of fatal injury from flying fragments. Bursting of the coupling can lead to an explosion in potentially explosive atmospheres.

- Do not exceed the maximum oil pressure specified in the dimension drawing.
- Keep the oil pressure constant in all oil channels during the entire procedure.



⚠ DANGER

Danger as a result of improper handling of fixtures and pumps

Failure to handle fixtures and pumps properly can result in a risk of injury. The coupling can burst. There is a risk of fatal injury from flying fragments. Bursting of the coupling can lead to an explosion in potentially explosive atmospheres.

- Please follow the manufacturer's instructions on handling the following tools:
  - ⇨ Fitting tools
  - ⇨ Pumps

⚠ WARNING

Risk of injury as a result of the hub or the fitting tool suddenly releasing.

When fitting, the released hub or fitting tool can fall.

- Use suitable hoisting gear to hold the hub and the fitting tool.
- Attach an axial locking element if the pressurised oil interference fit is tapered.

Information

Leaking oil

- When fitting the coupling part, catch any oil that escapes.
- Dispose of the oil according to the valid regulations.

Tools required

The required tools can be found in Section Disassembling the hub with shaft and hub connected through a pressurised oil interference fit (Page 59).

Procedure

1. Unscrew the screw plugs (10) and/or (20). You will find a description of the screw plugs in Section Screw plug (Page 73).
2. Clean the bores, shaft ends, fitting holes and contact surfaces.
3. Degrease and dry the bores and shaft ends.
4. Clean and dry the oil channels and the oil circulation grooves.
5. Place the hub/assembly unit onto the shaft.

6. Attach a measuring device that allows you to measure the fitting distance. Determine the zero point.
7. Vent the oil pumps and connect them to the oil ducts.
8. Pressurise the oil pumps to the pressure specified in the dimension drawing until oil starts to escape from the front faces. Keep the pressure constant.
9. Pressurise the hydraulic cylinder if oil escapes from both front faces as a closed oil ring. Push the hub/assembly unit onto the shaft with the specified fitting distance.
10. When you reach the end position, continue to hold the pressure on the hydraulic cylinder while draining the pressure oil from the fitting joint and dismantling the oil pumps.
11. Measure the axial position. If the measured fitting distance differs from the fitting distance in the order-related coupling drawing, correct the axial position.
12. Leave the hydraulic cylinder under pressure for at least 24 hours until the oil has escaped from the fitting joint and the friction lock is working.
13. Secure the hubs with an end plate or retaining nut.
14. In order to protect the oil channels of the hubs against corrosion, fill them with a suitable pressurised oil. Close the oil ducts using the screw plugs (10) and/or (20).

5.2.1.4 Assembling the clamping hubs

Shaft-hub connections using clamping hub connections belong to friction-locked connections.

In potentially explosive atmospheres, the maximum torque that can occur in operation must not exceed the maximum torque that can be transmitted using the friction-locked connection.



⚠ WARNING

Risk of explosion when the maximum torque that can be transmitted by the friction-locked connection is exceeded

Refer to Section Torques, speeds, geometry data and weights (Page 75) for the maximum clamping hub connection torque that can be transmitted

Information

The complete clamping hub assembly unit (12) or (22) is supplied ready to be installed. Do not dismantle the clamping hub (7) and the clamping ring (5) before assembling for the first time.

NOTE

Coupling damage by combining various different parts.

Only use the complete clamping hub assembly unit (12) or (22) supplied from the manufacturer. Do not combine parts from various complete clamping hub assembly units.

NOTE

Incorrect cleaning can diminish the reliability of torque transmission

Ensure that the bore of the clamping hub (7) and shaft (4) in the area of the clamping ring seat are absolutely clean and free of any grease and oil.

- Only use clean cloths and solvent.
- Use solvents or chemical cleaning agents free of any oil.

Procedure

1. Clean the bores and shaft ends.
2. Check that all of the parts are in a perfect condition.
3. Slightly release the tensioning screws (1).
4. Slightly withdraw the clamping ring (5) from the clamping hub (7) so that the clamping ring (5) is loose.
5. Place the complete clamping hub assembly unit (12) or (22) on the shaft.
6. Tighten the tensioning screws (1) one after the other as follows:
   - When going around the circumference for the first time, use half the tightening torque from Section Bolt connection of the complete clamping hub (Page 93).
   - When going around the circumference for the second time and for all other iterations, apply the full tightening torque from Section Bolt connection of the complete clamping hub (Page 93).
   - Once you have reached the tightening torque, and the clamping ring (5) is located at the flange of the clamping hub (7), then the complete clamping hub assembly unit (12) or (22) has been correctly assembled.
7. Contact Flender if the clamping ring (5) is not located at the clamping hub (7).

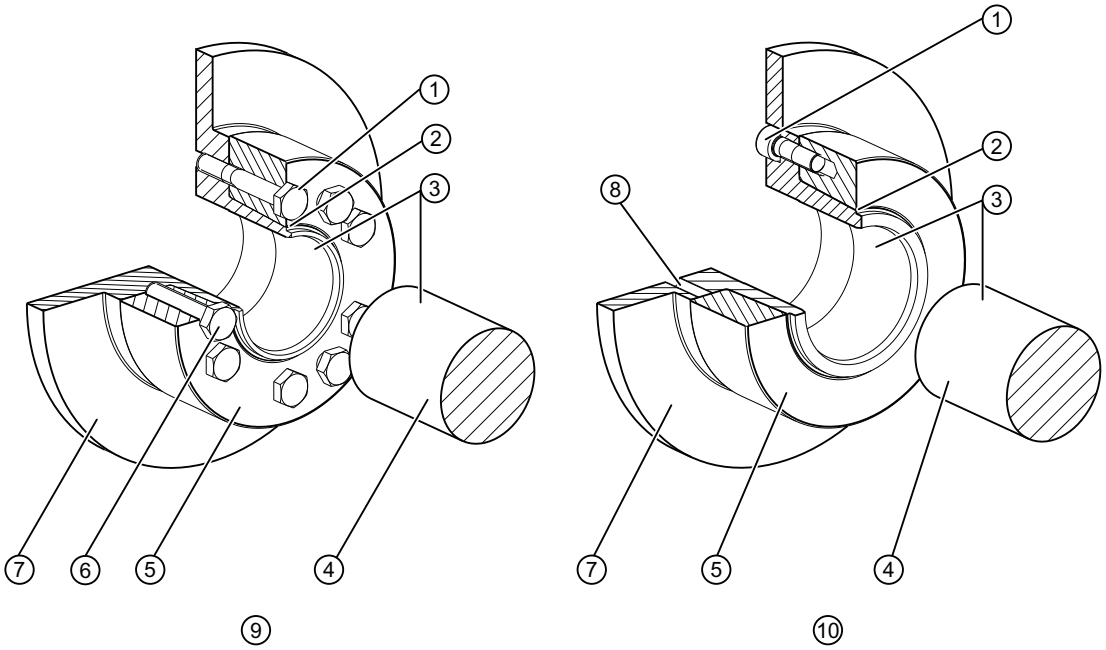

Figure 5-4: Complete clamping hub assembly unit (12) or (22)

① Tensioning screw
② Tapered surface lubricated
③ Grease-free
④ Shaft
⑤ Clamping ring
⑥ Jacking screw (not included in the scope of delivery)
⑦ Clamping hub
⑧ Jacking threaded hole
⑨ Clamping hub, complete, model 124 (part no. 12 or 22)
⑩ Clamping hub, complete, model 125 (part no. 12 or 22)

5.2.2 Assembling couplings that are integrally balanced

NOTE

Property damage as a result of inadequate balancing quality

Negative impact on the balancing quality by not observing the marking.

- Only bolt coupling parts together with the same numbers at the outer diameter.
- Arrange the coupling parts so that the numbers are in one line and can be read from one direction (see the diagram).

For couplings, which are integrally balanced, each individual coupling components has a multi-digit number at the outer flange diameter.

In the diagram, as example, the number 9999 is selected.

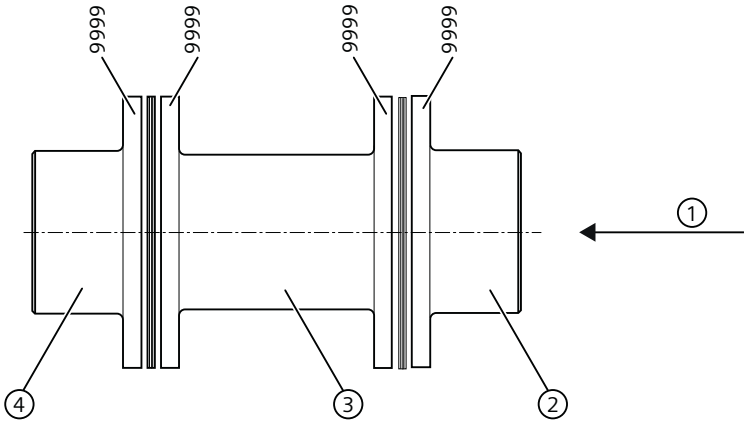

Figure 5-5: Marking for total balancing as assembly

① Can be read from this direction
② Hub
③ Sleeve/intermediate unit
④ Hub
9999 Any number to mark total balancing as assembly

5.2.3 Aligning the units

Models NEN, MCECM, MFEFM, NHN, MCHCM, MFHFM, NZN, MCZCM, MFZFM

1. Move the machines to be coupled close to one another. Comply with the distance S stated in Section Torques, speeds, geometry data and weights (Page 75).
2. Carefully align the machines.
3. Assemble the intermediate unit on models MCECM / MCHCM / MCZCM or MFEFM / MFHFM / MFZFM. Follow the instructions given in Section Assembling the intermediate unit (Page 43)
4. For model NEN / NHN / NZN, mount the sleeve. Follow the instructions given in Section Assembling the sleeve (Page 43).
5. For model NEN / NHN / NZN, mount the plate pack. Follow the instructions provided in Section Assembling the plate pack (Page 47) of the relevant assembly instructions.

Models BEB or BEN

1. For model BEN, position the plate pack between the sleeve and B hub. For model BEB, position the plate packs between the sleeve and two B hubs.
2. Mount the sleeve. Follow the instructions given in Section Assembling the sleeve (Page 43).
3. Move the machines to be coupled close to one another. Comply with the distance S1 stated in Section Torques, speeds, geometry data and weights (Page 75).
4. Carefully align the machines.
5. For model BEN, position the plate pack between the sleeve and a N hub.
6. Assembling the plate pack. Follow the instructions provided in Section Assembling the plate pack (Page 47) of the relevant assembly instructions.

5.2.4 Assembling the sleeve

Procedure

1. Clean the sleeve.
2. Check the holes and the contact surface of the flange to ensure that they are in a perfect condition.
3. Position the sleeve. Hold or support the sleeve.
4. Align the bolting points. Observe any markings that might be provided corresponding to Section Assembling couplings that are integrally balanced (Page 41).

5.2.5 Assembling the intermediate unit

The intermediate unit is supplied as individual parts

1. Clean the sleeve.
2. Check the centring, the holes and the contact surfaces of the flange to ensure that they are in a perfect condition.
3. Assemble the individual parts to create the intermediate unit. Follow the instructions provided in Section Assembling the plate pack (Page 47) of the relevant assembly instructions.
4. Attach the spacer sleeves (81) and the screws (82) of the transport lock.
5. Assemble the intermediate unit corresponding to the following instructions. Start with Point 4.

Preassembled intermediate unit

1. The intermediate unit with preassembled plate packs remains assembled. The plate packs are secured using transport locks (81; 82).
2. Clean the intermediate unit.
3. Check the centring and the contact surfaces of the flange to ensure that they are in a perfect condition.
4. Tighten screws (82) one after the other until the spacer sleeves (81) are in contact with the flange.
5. Position the intermediate unit between the flanges. Hold or support the intermediate unit.
6. Align the bolting points. Observe any markings that might be provided corresponding to Section Assembling couplings that are integrally balanced (Page 41).
7. Tighten the bolts (91) or nuts (92) hand-tight:
   - Model MCECM / MCHCM / MCZCM: Bolts (91)
   - Model MFEFM / MFHFM / MFZFM, ARN-6 up to size 268-6: Bolts (91)
   - Model MFEFM / MFHFM / MFZFM, ARN-6 as of size 291-6, ARN-8, ARN-10: Fitting bolts (91) and nuts (92)
8. Remove the screws (82) and spacer sleeves (81).

⚠ WARNING

Danger when operated with transport locks

Remove all of the transport locks (81 and 82), before you tighten bolts (91) or nuts (92) with the specified tightening torque.

9. Tighten the bolts (91) or nuts (92) in diagonal pairs and evenly.
   The tightening torques can be found in the Section Bolt connection C-flange to the M-hub (Page 91) or Section Bolt connections F flange with the M hub (Page 92).

Pre-assembled intermediate unit with axial backlash limitation

1. The intermediate unit with preassembled plate packs remains assembled. The plate packs are secured using transport locks (81; 82).
2. Clean the intermediate unit.
3. Check the centring and the contact surfaces of the flange to ensure that they are in a perfect condition.
4. For versions with axial backlash limitation, move one of the mounted coupling parts or one of the shaft ends to be coupled slightly axially to assemble the intermediate unit.
5. Position the intermediate unit between the flanges. Hold or support the intermediate unit.
6. Align the bolting points. Observe any markings that might be provided corresponding to Section Assembling couplings that are integrally balanced (Page 41).
7. Tighten the bolts (91) or nuts (92) hand-tight:
   - Model MCECM / MCHCM / MCZCM: Bolts (91)
   - Model MFEFM / MFHFM / MFZFM, ARN-6 up to size 268-6: Bolts (91)
   - Model MFEFM / MFHFM / MFZFM, ARN-6 as of size 291-6, ARN-8, ARN-10: Fitting bolts (91) and nuts (92)
8. After positioning the intermediate unit with axial backlash limitation, push the coupling part or shaft end to be coupled that was moved in point 4 back into its original position.
9. Remove the screws (82) and spacer sleeves (81).

⚠ WARNING

Danger when operated with transport locks

Remove all of the transport locks (81 and 82), before you tighten bolts (91) or nuts (92) with the specified tightening torque.

10. Tighten the bolts (91) or nuts (92) in diagonal pairs and evenly.
    The tightening torques can be found in the Section Bolt connection C-flange to the M-hub (Page 91) or Section Bolt connections F flange with the M hub (Page 92).

Intermediate unit CEC / CHC / CZC

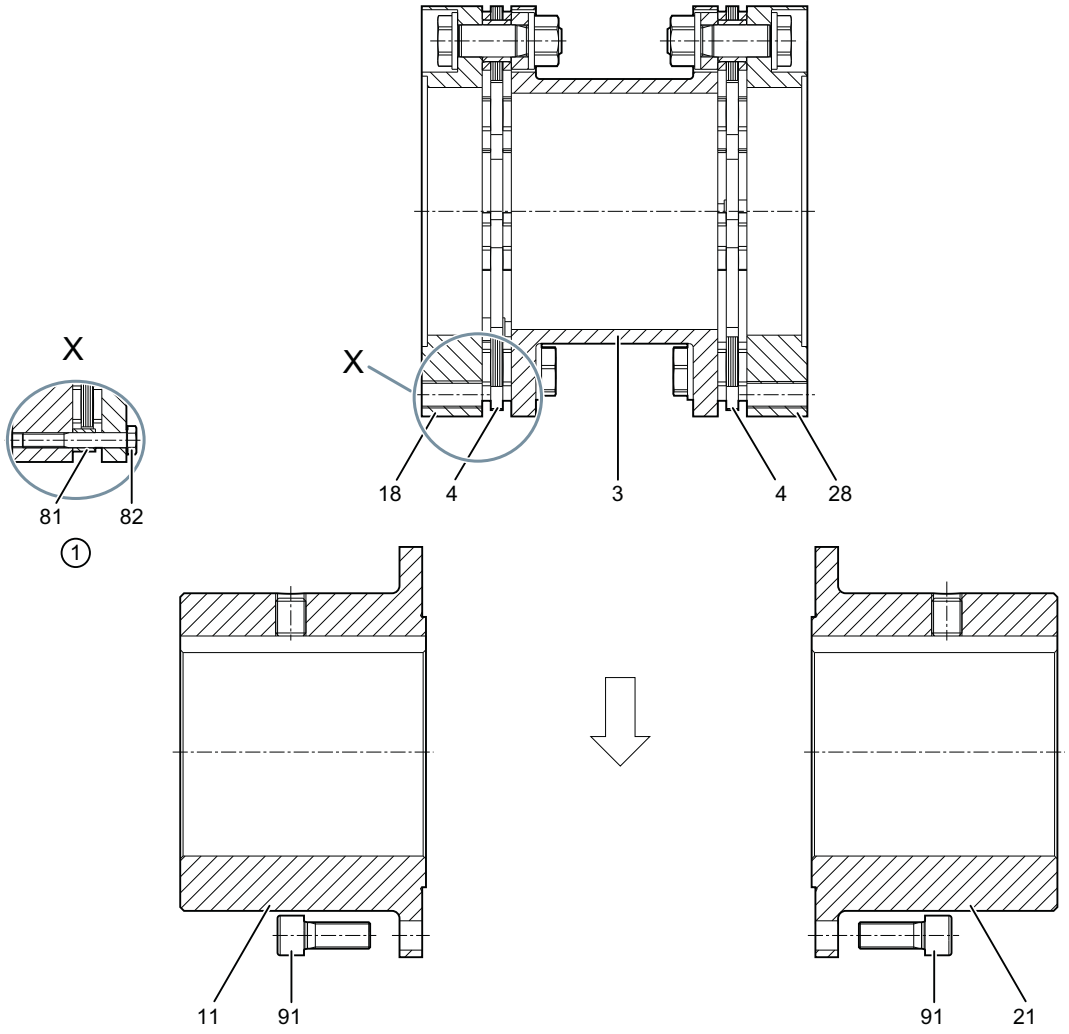

Figure 5-6: Installing intermediate unit CEC / CHC / CZC

3	E sleeve / H sleeve / Z sleeve
4	Plate pack
11	Hub
18	C flange
21	Hub
28	C flange
81	Spacer sleeve (transport lock)
82	Screw (transport lock)
91	Bolt
①	Individual unit X: Transport lock

Intermediate unit FEF / FHF / FZF

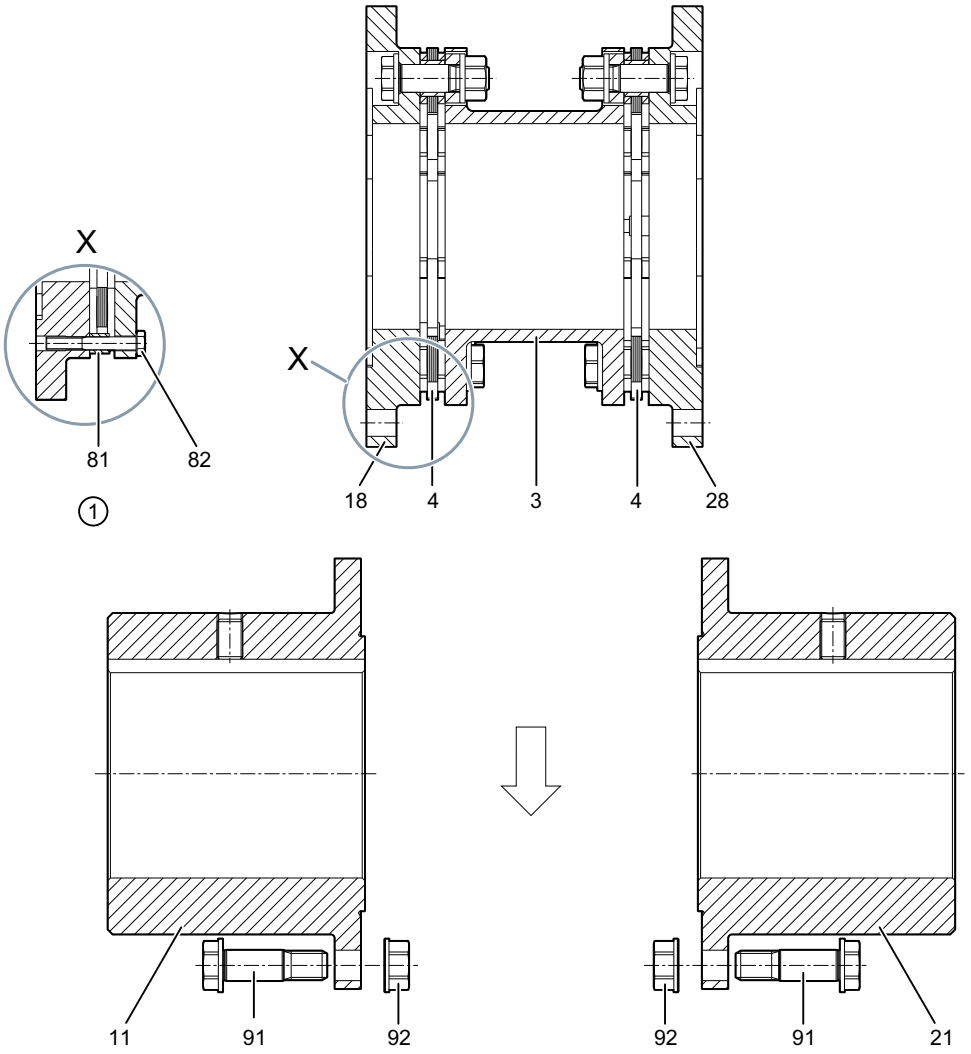

Figure 5-7: Install intermediate unit FEF / FHF / FZF

3	E sleeve / H sleeve / Z sleeve
4	Plate pack
11	Hub
18	F flange
21	Hub
28	F flange
81	Spacer sleeve (transport lock)
82	Screw (transport lock)
91	Bolt: ARN-6 up to size 268-6 Fitting bolt: ARN-6 as of size 291-6, ARN-8, ARN-10
92	Nut: ARN-6 as of size 291-6, ARN-8, ARN-10
①	Individual unit X: Transport lock

5.2.6 Assembling the plate pack

Assemble the plate pack according to the associated assembly instructions.

Plate packs are supplied in individual packages. The scope of delivery includes German assembly instructions for the plate packs. Instructions in other languages must be separately ordered.

The following data and instructions are included in the assembly instructions for plate packs:

- Instructions to assemble plate packs.
- Tightening torques for the bolt connection of the plate packs.
- Data on aligning the coupling.

Refer to the table for the associated assembly instructions.

Series	Model	Assembly instructions
ARN-6	3-part; with fitting bolt connection NEN, BEB, BEN, KEK, KEN, BEK NHN, KHK, KHN NZN, KZK, KZN	M4280-01
	5-part; with fitting bolt connection MCECM, MFEFM MCHCM, MFHFM MCZCM, MFZFM	
ARN-8	3-part; with conical bolt connection NEN NHN	M4281-01
	5-part; with conical bolt connection MCECM, MFEFM MCHCM, MFHFM	
ARN-10	3-part; with conical bolt connection NEN NHN	M4281-01
	5-part; with conical bolt connection MFEFM MFHFM	

Commissioning 6



DANGER

Risk of explosion due to ignition of deposits

When used in potentially explosive atmospheres, deposits from heavy metal oxides (rust) can ignite due to friction, impact or friction sparks and lead to an explosion. There is a risk to life.

- Ensure through the use of an enclosure or other suitable measures that heavy metal oxide (rust) deposits on the coupling are not possible.

In order to ensure safe commissioning, carry out various inspections prior to commissioning.

Testing before commissioning



DANGER

Risk of explosion due to overload conditions during commissioning

The coupling can burst. There is a risk of fatal injury from flying fragments. If a coupling bursts in an area at risk of explosion, then this can result in an explosion.

- Carry out the tests prior to commissioning.
- Do not touch the rotating coupling.

1. Carefully check that all of the transport locks (81) and (82) have been removed.
2. Check the tightening torques of the screws of the coupling in accordance with section Tightening torques and widths A/F (Page 91) and in accordance to the associated assembly instructions from Section Assembling the plate pack (Page 47).
3. Check the tightening torques of the foundation bolts of the coupled machines.
4. Check whether suitable enclosures (ignition protection, coupling guard, touch protection) have been installed and that the function of the coupling has not been adversely affected by the enclosure. This also applies to test runs and direction of rotation checks.

Operation 7

7.1 Normal operation of the coupling

The coupling runs quietly and shock-free during normal operation.

7.2 Faults – causes and rectification

A form of behaviour which is different to normal operation is classed as a fault and has to be rectified immediately.

Look out specifically for the following faults during coupling operation:

- Unusual coupling noise
- Sudden occurrence of shocks

7.2.1 Procedure in the event of faults



⚠ DANGER

Risk of explosion if any faults occur

The coupling can burst. There is a risk of fatal injury from flying fragments. Bursting of the coupling can lead to an explosion in potentially explosive atmospheres.

- Switch off the unit at once if any faults occur.
- Note during the repair work the possible causes of faults and the notes on rectifying them.

Proceed as described below if there is a fault of the coupling during operation:

1. Turn the drive off immediately.
2. Initiate the required action for repair taking into consideration the applicable safety regulations.

If you cannot determine the cause or if you cannot carry out repair work with your own means, request one of our Customer Service technicians from one of our Customer Service locations.

7.2.2 Identifying the fault cause

Faults occur frequently due to application errors or they occur due to operational circumstances such as wear of wearing parts or changes to the system.

The faults and fault causes listed below only serve as an indication for troubleshooting. In the case of a complex system be sure to include all the system components in the search for the fault.



⚠ WARNING

Risk of being pulled in by rotating parts

There is a danger of being caught or pulled in by rotating or moving parts and being injured as a result.

- Only carry out work on the coupling when it is at a standstill.
- Secure the drive aggregate against unintentional startup.
- Attach an information notice to the start switch stating clearly that work is being carried out on the coupling.
- Before starting any work, make sure that the unit is free from loads.

Intended use

The coupling is only approved for the applications specified in these instructions. Please observe the specifications in Section Intended use (Page 17).

7.2.2.1 Possible faults

Fault	Cause	Rectification
Sudden changes in the noise level and/ or sudden occurrences of shocks	Broken plate	Follow the instructions given in Section Replacing the plate pack (Page 54).
	Alignment changes	Follow the instructions given in Section Correcting the changed alignment (Page 54).
	Coupling not suitable for the operating conditions. Check the possible causes given in section Unsuitable coupling (Page 53).	Use a coupling that is suitable for the operating conditions.
	Incorrect coupling assembly. Check the possible causes given in sections Assembly-related causes (Page 53) and Specific assembly-related and maintenance-related causes (Page 54).	Reassemble the coupling in compliance with these instructions. Please observe all the stipulations and requirements given in chapter Assembly (Page 31).
	Incorrect maintenance of the coupling. Check the possible causes given in sections Maintenance-related causes (Page 53) and Specific assembly-related and maintenance-related causes (Page 54).	Please observe all the stipulations and requirements given in chapter Maintenance (Page 55).
	Exceeding the coupling overload torque	Make a visual inspection.

Table 7-1 : Table of faults

7.2.2.2 Possible causes

7.2.2.2.1 Unsuitable coupling

- Important information on the description of the drive unit and the environment were not available when the coupling was chosen.
- System torque too high and/or torque dynamics not permissible.
- System speed too high.
- Application factor not selected correctly.
- Chemically aggressive environment not taken into consideration.
- Coupling not suitable for the ambient temperature.
- Diameter and/or assigned fit of the finished bore not permissible.
- Width across corners of the parallel keyways greater than the width across corners of the parallel keyways in accordance with DIN 6885/1 for the maximum permissible bore.
- Shaft-hub connection incorrectly sized.
- Maximum permissible load conditions not taken into consideration.
- Maximum permissible overload conditions not taken into consideration.
- Dynamic load conditions not taken into consideration.
- Coupling and the machine and/or drive train form a critical torsional, axial or bending vibration system.

7.2.2.2.2 Assembly-related causes

- Damaged component installed.
- Shaft diameter outside the stipulated tolerance range.
- Coupling parts interchanged and hence not assigned to the specified shaft.
- Stipulated locking elements to prevent axial movements not installed.
- Stipulated tightening torques not adhered to.
- Bolts inserted dry or greased.
- Flange surfaces of screwed connections not cleaned.
- Alignment and/or shaft misalignment values not set in accordance with the instructions.
- Coupled machines were not correctly connected to the foundation so that a shifting of the machines leads to an impermissible displacement of the coupling parts.
- Coupled machines not earthed adequately.
- Coupling guard used is not suitable.

7.2.2.2.3 Maintenance-related causes

- Stipulated maintenance intervals not adhered to.
- Replacement parts that were used were not original replacement parts from Flender.
- Flender spare parts that were used were old or damaged.
- Leak in the area of the coupling not detected so that chemically aggressive substances damage the coupling.
- Indications of faults, such as noise or vibration, were not heeded.

- Stipulated tightening torques not adhered to.
- Alignment and/or shaft misalignment values not set in accordance with the instructions.

7.2.2.2.4 Specific assembly-related and maintenance-related causes

- Plate packs not assembled.
- Plate packs do not comply with the technical specification for the specific application
- Clamping ring is not in contact with the clamping hub.

7.2.3 Correcting faults

7.2.3.1 Replacing the plate pack

1. Checking the plate pack.
2. If a plate is broken, then replace the complete plate pack. Observe the instructions provided in Section Replacing the plate pack (Page 55).

7.2.3.2 Correcting the changed alignment

A changed alignment of the coupling during operation often occurs when the coupled machines shift compared to one another. A cause of this can be loose foundation bolts.

Procedure

1. Correct the cause for the change in alignment.
2. Check the couplings for damage.
3. Check the locking elements that prevent axial movements and correct these as required.
4. Realign the coupling. Observe the instructions provided in the associated assembly instructions from Section Assembling the plate pack (Page 47).

Maintenance 8

8.1 Maintenance intervals



⚠ DANGER

Risk of explosion if maintenance intervals are not adhered to

The coupling can burst. There is a risk of fatal injury from flying fragments. If a coupling bursts in an area at risk of explosion, then this can result in an explosion.

- Please observe all the specifications for coupling maintenance in this section.



⚠ WARNING

Risk of being pulled in by rotating parts

There is a danger of being caught or pulled in by rotating or moving parts and being injured as a result.

- Only carry out work on the coupling when it is at a standstill.
- Secure the drive aggregate against unintentional startup.
- Attach an information notice to the start switch stating clearly that work is being carried out on the coupling.
- Before starting any work, make sure that the unit is free from loads.

Check the coupling every 12 months for any abnormalities. Carry out a visual inspection.

Rectify any faults. Troubleshooting notes are provided in Chapter Operation (Page 51).

8.2 Replacing the plate pack



⚠ DANGER

Danger if the coupling fractures

If you do not observe the information stipulated here regarding replacement of plate packs, this can cause the coupling to break-up in operation. There is a risk of fatal injury from flying fragments. Bursting of the coupling can lead to an explosion in potentially explosive atmospheres.

- Please observe all the stipulations concerning the replacement of plate packs.

Information

Replacing the plate pack assembly unit

If individual parts of the plate pack are damaged, replace the complete plate pack assembly unit.

If you must replace the plate pack, then we recommend that you return the half coupling to Flender for repair and balancing.

If you replace the plate pack yourself, do not move the coupled machines.

Remove the sleeve or the intermediate unit corresponding to the instructions in Section Dismantling the coupling (Page 56).

When removing and when re-assembling the plate packs, carefully follow the instructions in the associated assembly instructions from Section Assembling the plate pack (Page 47).

8.3 Dismantling the coupling

Disassembling the coupling involves the following steps:

- Disassembling the sleeve (Page 57)
- Disassembling the intermediate unit (Page 58)
- Disassembling the hubs (Page 58)

The bolt connection of the plate pack varies depending on the model and size. You will find the illustrations of the various bolt connections below:

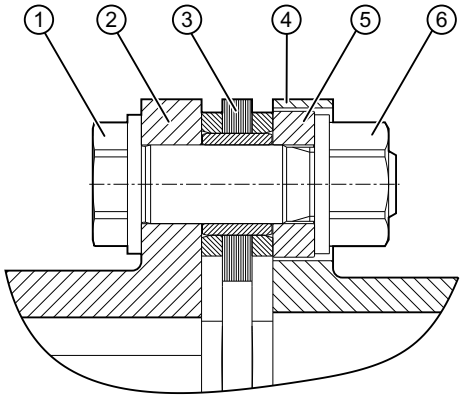

Figure 8-1: Detailed view of the fitting bolt connection

Model ARN-6

① Fitting bolt
② Flange
③ Plate pack
④ Flange
⑤ Guard ring
⑥ Nut

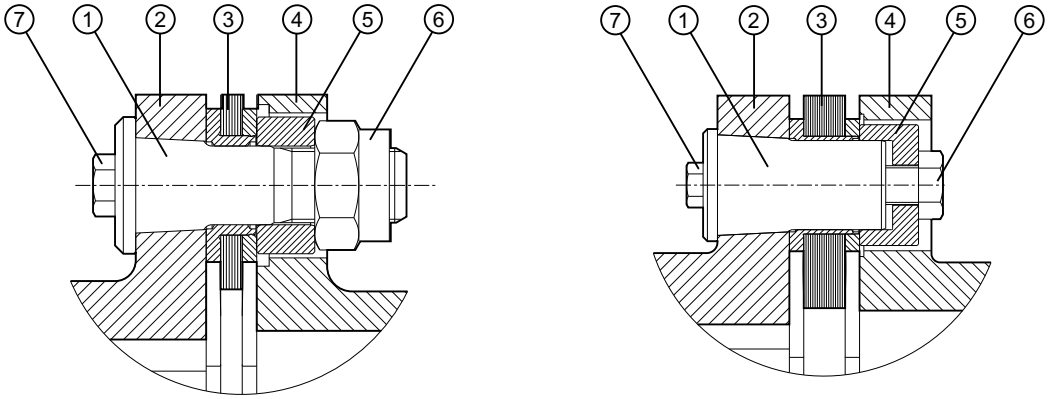

Figure 8-2: Detailed view of the conical bolt connection

Model ARN-8, sizes 219-8 to 354-8

① Tapered bolt
② Flange
③ Plate pack
④ Flange
⑤ Guard ring
⑥ Nut
⑦ Hexagon bolt

Model ARN-8, sizes 387-8 to 631-8
Model ARN-10, sizes 495-10 to 988-10

① Tapered bolt
② Flange
③ Plate pack
④ Flange
⑤ Guard ring
⑥ Tensioning screw
⑦ Hexagon bolt

8.3.1 Disassembling the sleeve

Procedure

1. Support the sleeve.
2. Secure the fitting bolts (1) / tapered bolts (1) against turning. Brace the anti-rotation device (counter holder) on the flange to which the plate pack is connected. Unscrew all of the nuts (6) / tensioning screws (6) one after the other.
3. Remove the nuts (6), the fitting bolts (1) and the guard rings (5) on the ARN-6 series.
4. On the ARN-8 and ARN-10 series, remove the nuts (6) / tensioning screws (6), the tapered bolt (1) and the guard rings (5).
5. For models without B hub, remove the sleeve and the plate packs without moving the coupled machines.
6. For models with B hub, remove the sleeve and the plate packs by shifting the coupled machines.
7. Check the hubs, sleeve and the plate packs for damage.
8. Protect them against corrosion.
9. Replace damaged parts.

When reassembling the sleeve, follow the instructions in Chapters Assembly (Page 31) and Commissioning (Page 49).

8.3.2 Disassembling the intermediate unit

Procedure

1. Attach the spacer sleeves (81) of the transport lock. Insert the screws without tightening them (82).
2. Support the intermediate unit.
3. Remove the bolts (91) and nuts (92).
4. Tighten screws (82) one after the other until the spacer sleeves (81) are in contact with the flange.
5. For the version with axial backlash limitation, move one of the mounted coupling parts or one of the shaft ends to be coupled slightly axially to disassemble the intermediate unit.
6. Remove the intermediate unit from the centring by screwing the jacking screws into the jacking threaded holes.
7. Remove the intermediate unit.
8. Check the hubs, intermediate unit and the plate packs for damage.
9. Protect them against corrosion.
10. Replace damaged parts.

When reassembling the intermediate unit, follow the instructions in Chapters Assembly (Page 31) and Commissioning (Page 49).

Disassembling the intermediate unit

1. Secure the individual parts.
2. Secure the fitting bolts (1) / tapered bolts (1) against turning. Brace the anti-rotation device (counter holder) on the flange to which the plate pack is connected. Unscrew all of the nuts (6) / tensioning screws (6) one after the other.
3. Remove the nuts (6), the fitting bolts (1) and the guard rings (5) on the ARN-6 series.
4. On the ARN-8 and ARN-10 series, remove the nuts (6) / tensioning screws (6), the tapered bolt (1) and the guard rings (5).
5. Remove the plate pack.
6. Check the individual parts for damage.
7. Protect them against corrosion.
8. Replace damaged parts.

When reassembling the intermediate unit, follow the instructions in Chapters Assembly (Page 31) and Commissioning (Page 49).

8.3.3 Disassembling the hubs

NOTE
Damage to property Damage to the shaft end, the hub and/or the parallel key. • Note the handling instructions when disassembling the hub.

The procedure for disassembling the hubs varies depending on the selected shaft-hub connection.

- Disassembling hubs with shaft-hub connection through a parallel key (Page 59)
- Disassembling the hub with shaft and hub connected through a pressurised oil interference fit (Page 59)
- Disassembling the clamping hubs (Page 61)

8.3.3.1 Disassembling hubs with shaft-hub connection through a parallel key



⚠ DANGER

Risk of explosion from burners and hot hub

Risk of burns due to burners and hot surfaces. Burners or hot hubs can lead to an explosion in potentially explosive atmospheres. There is a risk to life.

- Wear suitable protective equipment (gloves, safety glasses).
- Ensure that the area is not at risk of explosion.

Procedure

1. Move the coupled machines apart.
2. Secure the hub to prevent it from falling.
3. Remove the axial locking element (set screw, end plate).
4. Use a suitable pulling fixture.
5. Heat up the hub using a burner above the parallel keyway along its length to maximum of 80 °C.
6. Withdraw the hub. Use suitable lifting gear when doing this.
7. Check the hub bore and the shaft for damage and protect them against corrosion.
8. Replace damaged parts.

When reinstalling the coupling parts, please observe the information in Chapters Assembly (Page 31) and Commissioning (Page 49).

8.3.3.2 Disassembling the hub with shaft and hub connected through a pressurised oil interference fit



⚠ DANGER

Risk of explosion if oil pressure exceeds maximum permissible value

The coupling can burst. There is a risk of fatal injury from flying fragments. If a coupling bursts in an area at risk of explosion, then this can result in an explosion.

- Do not exceed the maximum oil pressure specified in the dimension drawing.
- Keep the oil pressure constant in all oil channels during the entire procedure.



⚠ DANGER

Risk of explosion due to improper handling

Failure to handle fixtures and pumps properly can result in injuries. The coupling can burst. There is a risk of fatal injury from flying fragments. In an area at risk of explosion, a burst coupling may result in an explosion.

- Use the fixtures and pumps as intended.
- Follow the manufacturer's instructions for handling the pulling fixtures and the pumps.

⚠ WARNING

Risk of injury as a result of the hub or the pulling fixture suddenly releasing.

Falling hubs or pulling fixtures can cause crushing, serious injury and death. The hubs can be damaged.

- Use suitable hoisting gear to secure the hubs and the pulling fixture.
- Attach an axial locking element if the pressurised oil interference fit is tapered.

⚠ CAUTION

Risk of injury and danger to the environment from spilled lubricant

There is a risk of injury from slipping. The lubricant may be harmful to the environment.

- Make sure you capture any lubricant that might escape.
- Dispose of the lubricant in accordance with applicable regulations.

Tools required

- One oil pump with pressure gauge (at least 2,500 bar) per oil channel.
  Or: One motor-driven oil pump. One connection that can be closed independently is required for each oil channel.
  Refer to the dimension drawing for the number of oil channels.
- With a stepped bore:
  A motor-driven oil pump at the oil channel located at the point of transition from the smaller to the larger bore. A large quantity of oil per unit of time is needed here.
- Suitable connections and pipes.
- Suitable pulling fixture.
  Or: Retaining plate with retaining screws or threaded spindles with nuts. Material of the screws and spindles must have at least strength class 10.9; material of the nuts depending on the material of the screws or spindles.
- Hydraulic cylinder with oil pump. Note displacement and pressure of the hydraulic cylinder. Refer to the dimension drawing for the required axial force.

Procedure

1. Move the coupled machines apart.
2. Use a suitable pulling fixture.
3. Secure the hub and the pulling fixture so that they cannot fall.
4. Remove the screw plugs (10) or (20) from the oil channels. You will find a description of the screw plugs in Section Screw plug (Page 73).

5. Vent an oil pump. Connect the oil pump to the oil channel that is below the largest outer diameter.
6. Pressurise the oil pump to the pressure specified in the dimension drawing until oil starts to escape from the adjacent connections or the front faces. Keep the pressure constant.
7. Deaerate the next oil pump and connect it to the adjacent oil channel.
8. Repeat steps 6 and 7 for the remaining oil ducts.
9. If so much oil escapes when pressure is applied that the pump cannot maintain the pressure, use a higher-viscosity oil.
10. Pressurise the hydraulic cylinder if oil escapes from both front faces as a closed oil ring. Make sure that the hub is immediately pulled off in a swift, smooth movement.

NOTE

Removal in several strokes

If several strokes of the hydraulic cylinder are required to remove the part, make sure that the shaft end is positioned between two oil channels at the end of the stroke.

11. Remove the oil pump and the pulling fixture from the hub.
12. Check the hub bore and the shaft for damage and protect them against corrosion.
13. Replace damaged parts.

When reinstalling the coupling parts, please observe the information in Chapters Assembly (Page 31) and Commissioning (Page 49).

8.3.3.3 Disassembling the clamping hubs

⚠ WARNING

Risk of injury through incorrect disassembly

Risk of severe injury if the clamping ring (5) suddenly releases.

- Carefully comply with the described procedure.

Procedure

1. Move the coupled machines apart.
2. Secure the clamping hub (7) and the clamping ring (5) so that they cannot fall.
3. Carefully release all of the tensioning screws (1) one after the other through 1/4 revolution.
4. Repeat Step 3 until the clamping ring (5) releases.
5. If the clamping ring (5) is not released, you can use the jacking threaded holes arranged in an offset configuration to release it. Tighten the jacking screws (6) one after the other in several iterations.
6. Withdraw the clamping hub (7) together with the clamping ring (5). Use suitable lifting gear when doing this.
7. Clamping hub connections that have been released do not have to be disassembled and regreased.

8. Check all of the individual parts for damage and protect them against corrosion.
9. Replace damaged parts.

When reassembling the hubs, observe the instructions in chapters Assembly (Page 31) and Commissioning (Page 49).

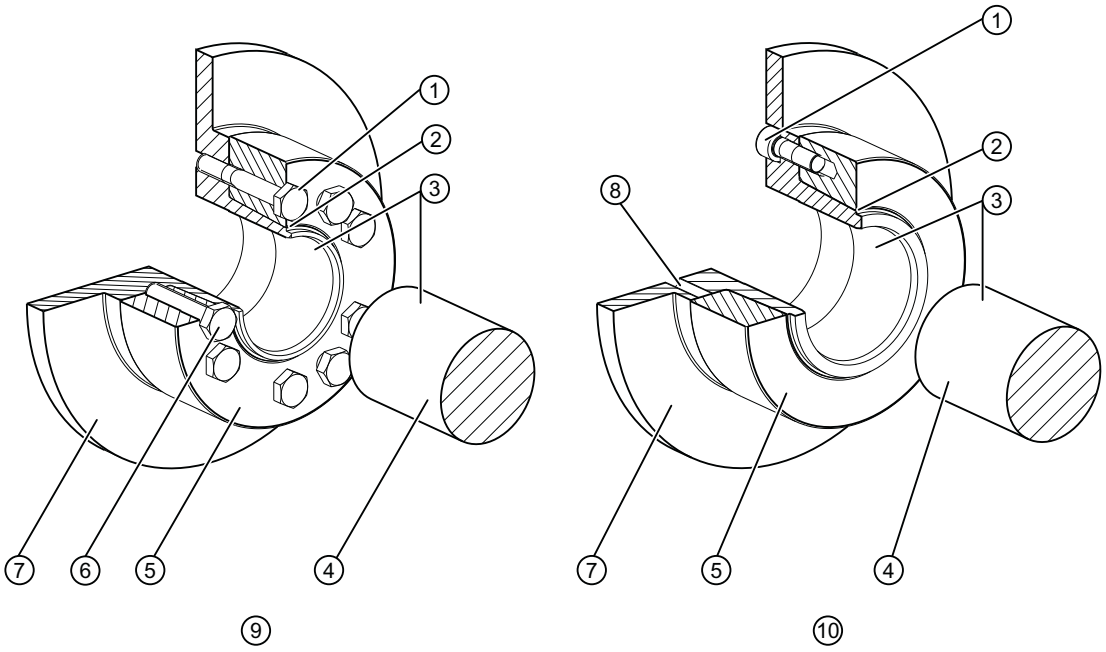

Figure 8-3: Complete clamping hub assembly unit (12) or (22)

① Tensioning screw
② Tapered surface lubricated
③ Grease-free
④ Shaft
⑤ Clamping ring
⑥ Jacking screw (not included in the scope of delivery)
⑦ Clamping hub
⑧ Jacking threaded hole
⑨ Clamping hub, complete, model 124 (part no. 12 or 22)
⑩ Clamping hub, complete, model 125 (part no. 12 or 22)

Service and support 9

9.1 Contact

When ordering replacement parts, requesting a customer service technician or if you have any technical queries, contact our factory or one of our Customer Service addresses:

Flender GmbH

Schlavenhorst 100

46395 Bocholt

Germany

Tel.: +49 (0)2871/92-0

Fax.: +49 (0)2871/92-2596

Flender GmbH (http://www.flender.com/)

More information

Further information about service and support can be found on the Internet:

Service & Support (https://www.flender.com/service)

Disposal

10

Disposal of the coupling

Dispose of the coupling parts according to applicable national regulations or recycle them.

Replacement parts 11

11.1 Ordering replacement parts

By stocking the most important replacement parts at the installation site, you can ensure that the coupling is ready for use at any time.

Only ever use original replacement parts from Flender. Flender only accepts liability for original replacement parts from Flender.

You can find the available replacement parts for the coupling described here under Spare parts drawing and spare parts list (Page 67).

You can find our contact data for ordering replacement parts here: Service and support (Page 63).

Information required when ordering replacement parts

- Flender order number with item
- Flender drawing number
- Coupling model and size
- Part number (refer to Spare parts drawing and spare parts list (Page 67))
- Dimensions of the replacement part, for example:
  - Bore
  - Bore tolerance
  - Parallel keyway and balancing
- Special dimensions, for example, flange connection dimensions, intermediate sleeve length or brake drum dimensions
- Any special properties of the replacement part, such as, for example:
  - Temperature resistance
  - Electrical insulation
  - Operating fluid
  - Use in potentially explosive atmospheres
- Quantity

11.2 Spare parts drawing and spare parts list

Information

Replacing the plate pack assembly unit

If individual parts of the plate pack are damaged, replace the complete plate pack assembly unit.

For information about the plate pack design and structure, refer to the associated assembly instructions provided in Section Assembling the plate pack (Page 47).

11.2.1 Model NEN / NHN / NZN

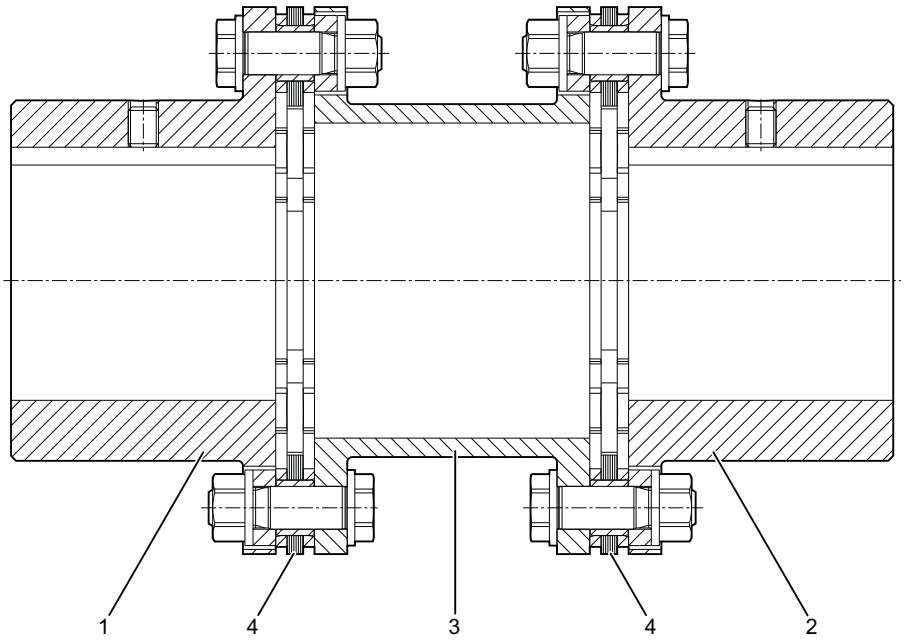

Figure 11-1: Spare parts drawing, model NEN / NHN / NZN

Model NEN		Model NHN		Model NZN	
Part number	**Designation**	**Part number**	**Designation**	**Part number**	**Designation**
1	N hub	1	N hub	1	N hub
2	N hub	2	N hub	2	N hub
3	E sleeve	3	H sleeve	3	Z sleeve
4	Plate pack [2)]	4	Plate pack [2)]	4	Plate pack [2)]
10	Screw plug[1)]	10	Screw plug[1)]	10	Screw plug[1)]
20	Screw plug[1)]	20	Screw plug[1)]	20	Screw plug[1)]

Table 11-1 : Spare parts list for models NEN / NHN / NZN

[1)] Screw plugs (10, 20) are only used in combination with a pressurised oil interference fit

[2)] ARN-6 (apart from sizes 318 and 343): Plate pack with bolt connection part no. 4
ARN-6 (sizes 318 and 343) and ARN-8/-10: Plate pack part no. 41, bolt connection part no. 42

You can find an illustration of the screw plugs in Section Screw plug (Page 73).

11.2.2 Model BEB

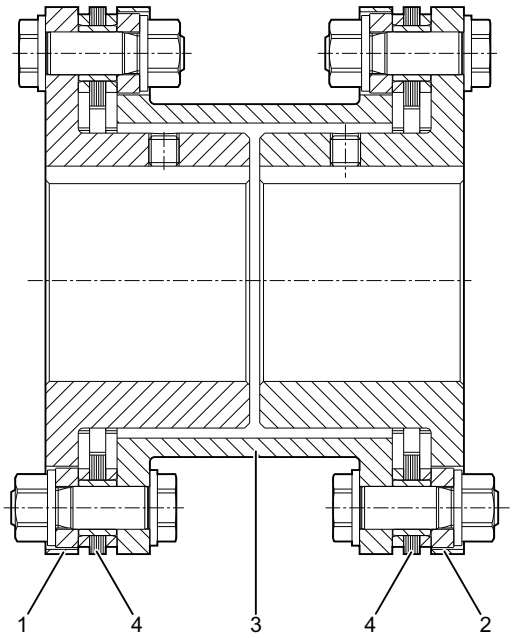

Figure 11-2: Spare parts drawing, model BEB

Part number	Designation
1	B hub
2	B hub
3	E sleeve
4	Plate pack[2)]
10	Screw plug[1)]
20	Screw plug[1)]

Table 11-2 : Replacement parts list for model BEB

[1)] Screw plugs (10, 20) are only used in combination with a pressurised oil interference fit.

[2)] ARN-6 (apart from sizes 318 and 343): Plate pack with bolt connection part no. 4
ARN-6 (sizes 318 and 343) and ARN-8/-10: Plate pack part no. 41, bolt connection part no. 42

You can find a description of the screw plugs in Section Screw plug (Page 73).

11.2.3 Model BEN

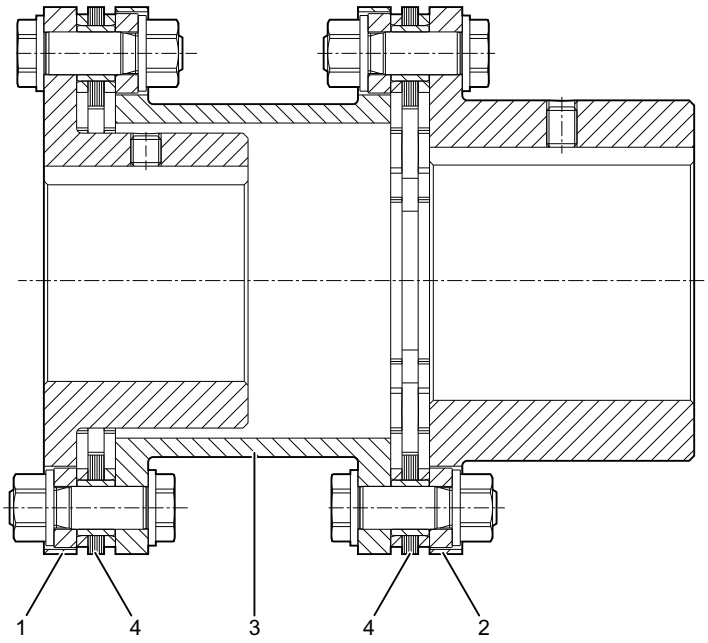

Figure 11-3: Spare parts drawing, model BEN

Part number	Designation
1	B hub
2	N hub
3	E sleeve
4	Plate pack[2)]
10	Screw plug[1)]
20	Screw plug[1)]

Table 11-3 : Replacement parts list for model BEN

[1)] Screw plugs (10, 20) are only used in combination with a pressurised oil interference fit.

[2)] ARN-6 (apart from sizes 318 and 343): Plate pack with bolt connection part no. 4
ARN-6 (sizes 318 and 343) and ARN-8/-10: Plate pack part no. 41, bolt connection part no. 42

You can find a description of the screw plugs in Section Screw plug (Page 73).

11.2.4 Model MCECM / MCHCM / MCZCM

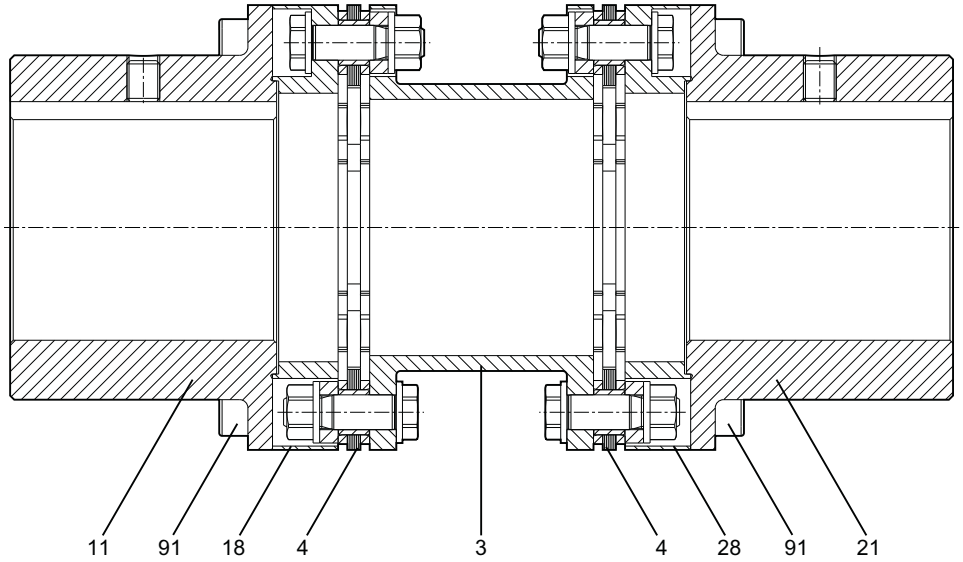

Figure 11-4: Spare parts drawing, model MCECM / MCHCM / MCZCM

Model MCECM		Model MCHCM		Model MCZCM	
Part number	**Designation**	**Part number**	**Designation**	**Part number**	**Designation**
3	E sleeve[1)]	3	H sleeve[2)]	3	Z sleeve[3)]
4	Plate pack[1) 5)]	4	Plate pack[2) 5)]	4	Plate pack[3) 5)]
10	Screw plug [4)]	10	Screw plug [4)]	10	Screw plug [4)]
11	M hub	11	M hub	11	M hub
18	C flange[1)]	18	C flange[2)]	18	C flange[3)]
20	Screw plug [4)]	20	Screw plug [4)]	20	Screw plug [4)]
21	M hub	21	M hub	21	M hub
28	C flange[1)]	28	C flange[2)]	28	C flange[3)]
91	Screws	91	Screws	91	Screws

Table 11-4 : Spare parts list for models MCECM / MCHCM / MCZCM

[1)] The C flange (18), plate pack (4), E sleeve (3), plate pack (4) and C flange (28) form the intermediate unit CEC

[2)] The C flange (18), plate pack (4), H sleeve (3), plate pack (4) and C flange (28) form the intermediate unit CHC

[3)] The C flange (18), plate pack (4), Z sleeve (3), plate pack (4) and C flange (28) form the intermediate unit CZC

[4)] Screw plugs (10, 20) are only used in combination with a pressurised oil interference fit

[5)] ARN-6 (apart from sizes 318 and 343): Plate pack with bolt connection part no. 4
ARN-6 (sizes 318 and 343) and ARN-8/-10: Plate pack part no. 41, bolt connection part no. 42

You can find an illustration of the screw plugs in Section Screw plug (Page 73).

11.2.5 Model MFEFM / MFHFM / MFZFM

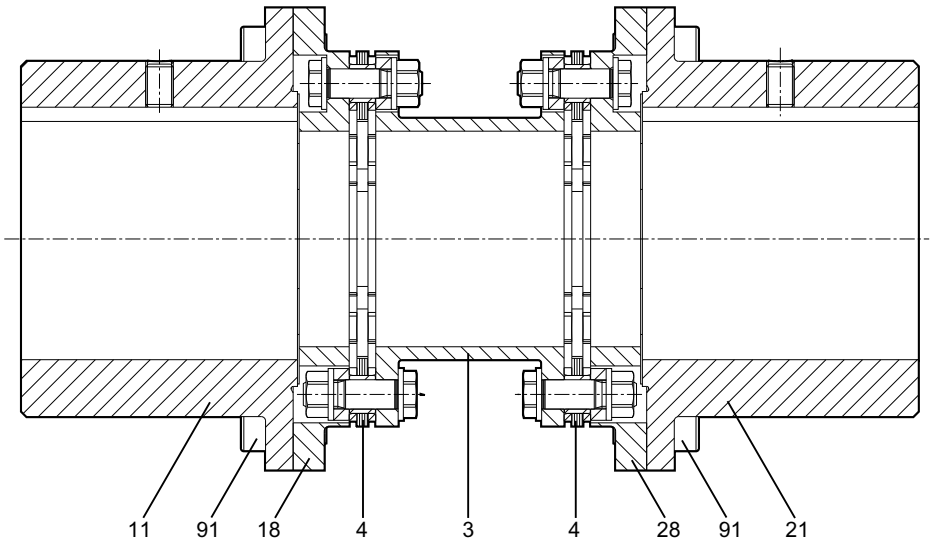

Figure 11-5: Spare parts drawing, model MFEFM / MFHFM / MFZFM

Model MFEFM		Model MFHFM		Model MFZFM	
Part number	**Designation**	**Part number**	**Designation**	**Part number**	**Designation**
3	E sleeve[1)]	3	H sleeve[2)]	3	Z sleeve[3)]
4	Plate pack[1) 7)]	4	Plate pack[2) 7)]	4	Plate pack[3) 7)]
10	Screw plug [4)]	10	Screw plug [4)]	10	Screw plug [4)]
11	M hub	11	M hub	11	M hub
18	F flange[1)]	18	F flange[2)]	18	F flange[3)]
20	Screw plug [4)]	20	Screw plug [4)]	20	Screw plug [4)]
21	M hub	21	M hub	21	M hub
28	F flange[1)]	28	F flange[2)]	28	F flange[3)]

Model MFEFM		Model MFHFM		Model MFZFM	
Part number	Designation	Part number	Designation	Part number	Designation
91	Bolt[5] Fitting bolt[6]	91	Bolt[5] Fitting bolt[6]	91	Bolt[5] Fitting bolt[6]
92	Nut[6]	92	Nut[6]	92	Nut[6]

Table 11-5 : Spare parts list for model MFEFM / MFHFM / MFZFM

[1] The F flange (18), plate pack (4), E sleeve (3), plate pack (4) and F flange (28) form the intermediate unit FEF

[2] The F flange (18), plate pack (4), H sleeve (3), plate pack (4) and F flange (28) form the intermediate unit FHF

[3] The F flange (18), plate pack (4), Z sleeve (3), plate pack (4) and F flange (28) form the intermediate unit FZF

[4] Screw plugs (10, 20) are only used in combination with a pressurised oil interference fit

[5] ARN-6 up to size 268-6

[6] ARN-6 as of size 291-6, ARN-8, ARN-10

[7] ARN-6 (apart from sizes 318 and 343): Plate pack with bolt connection part no. 4
ARN-6 (sizes 318 and 343) and ARN-8/-10: Plate pack part no. 41, bolt connection part no. 42

You can find an illustration of the screw plugs in Section Screw plug (Page 73).

11.2.6 Screw plug

The following diagram shows the screw plugs (10) or (20):

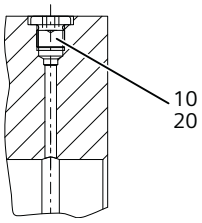

Figure 11-6: Screw plug

11.2.7 Additional hubs

11.2.7.1 Clamping hub, complete

Instead of the N hub of model NEN, NHN, NZN or BEN, you can also use the complete clamping hub (12) or (22). Models KEK, KEN, KHK, KHN, KZK, KZN or BEK are then obtained. You can find an illustration of the complete clamping hub in Section Dimension drawing of the complete clamping hub (Page 86).

Information

Replace complete clamping hub assembly unit (12) or (22)

If individual parts of the complete clamping hub assembly unit (12) or (22) are damaged, then replace the complete assembly.

Part number	Designation	Model						
		KEK	KEN	KHK	KHN	KZK	KZN	BEK
1	B hub							x
2	N hub		x		x		x	
3	E sleeve	x	x					x
3	H sleeve			x	x			
3	Z sleeve					x	x	
4	Plate pack	x	x	x	x	x	x	x
10	Screw plug[1)]							
12	Clamping hub, complete	x	x	x	x	x	x	
20	Screw plug[1)]							
22	Clamping hub, complete	x		x		x		x

Table 11-6 : Spare parts list for models KEK, KEN, KHK, KHN, KZK, KZN, or BEK

[1)] Screw plugs (10, 20) are only used in combination with a pressurised oil interference fit.

You can find an illustration of the screw plugs in Section Screw plug (Page 73).

Technical specifications

A

A.1 Torques, speeds, geometry data and weights

In this section, you will find dimension drawings and technical data for N-ARPEX couplings, series ARN-6, ARN-8 and ARN-10 of the following models:

- Model NEN / NHN / NZN, dimension drawing (Page 76) and technical data (Page 76)
- Model BEB, dimension drawing (Page 78) and technical data (Page 79)
- Model BEN, dimension drawing (Page 80) and technical data (Page 80)
- Model MCECM / MCHCM / MCZCM, dimension drawing (Page 81) and technical data (Page 82)
- Model MFEFM / MFHFM / MFZFM, dimension drawing (Page 84) and technical data (Page 84)
- Clamping hub, complete, dimension drawing (Page 86) and technical data (Page 87)

A.1.1 Dimension drawing of model NEN / NHN / NZN

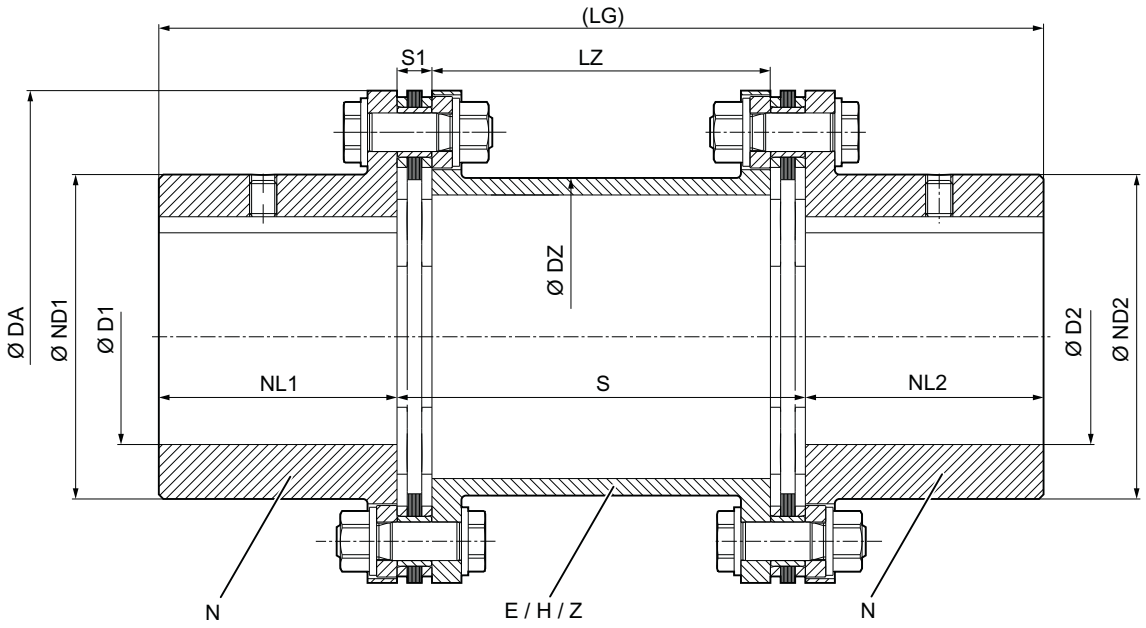

Figure A-1: Model NEN / NHN / NZN

A.1.2 Technical data of model NEN / NHN / NZN

Size	Rated torque	Speed	Max-imum bore[1]										Weigh t[6]
DA	TKN	n_{max}	D1 D2	ND1 ND2	NL1 NL2	DZ 2)	 3)	S1	S 4)	 5)	LZ	LG	m
	kNm	rpm	mm	mm	mm	mm	mm	mm	mm	mm	mm	mm	kg
86-6	0.35	24,000	42	56	45	45	101.6	8.0	100	423	84	190	1.9
103-6	0.5	20,000	55	73	55	60	114.3	8.4	100	423.8	83.2	210	3
122-6	0.95	17,000	65	85	65	73	139.7	8.8	100	442.6	82.4	230	5.1
133-6	1.25	15,000	75	96	75	85	168.3	9.6	100	444.2	80.8	250	6.4
159-6	2.1	13,000	80	104	80	97	177.8	11.6	100	478.2	76.8	260	9.6
174-6	2.5	12,000	90	118	85	116	203	12.8	100	445.6	74.4	270	11.8
184-6	3.8	11,000	95	124	90	123	216	14.6	140	589.2	110.8	320	16.4
203-6	5	10,000	100	135	95	128	219.1	15.0	140	490	110	330	21.3
217-6	6.2	9,500	110	143	105	140	244.5	15.4	140	496.8	109.2	350	24.4
251-6	10.5	8,000	120	160	110	160	273	20.6	180	541.2	138.8	400	38
268-6	13.8	7,500	130	170	130	166	298.5	22.0	180	594	136	440	48.6
291-6	18.2	7,000	145	190	140	188	323.9	22.8	180	597.6	134.4	460	62.8
318-6	23	6,500	155	205	150	197	343	23.2	200	622.4	153.6	500	83.9
343-6	28	6,000	170	230	160	223	368	24.0	200	624	152	520	104

Size	Rated torque	Speed	Max-imum bore[1]										Weigh t[6]
DA	TKN	n_{max}	D1 D2	ND1 ND2	NL1 NL2	DZ 2)	 3)	S1	S 4)	 5)	LZ	LG	m
	kNm	rpm	mm	mm	mm	mm	mm	mm	mm	mm	mm	mm	kg
219-8	10	9,500	100	137	115	124	-	12.2	140	-	115.6	370	31.9
241-8	15	8,700	110	150	127	135	-	12.6	140	-	114.8	394	41.3
262-8	20	8,000	120	163	138	148	-	13.8	180	-	152.4	456	53.8
285-8	27	7,300	130	177	150	162	-	15.2	180	-	149.6	480	70.8
302-8	35	6,900	140	192	161	174	-	17.2	180	-	145.6	502	89.4
321-8	43	6,500	150	206	173	189	-	21.0	200	-	158	546	109
354-8	56	5,900	170	232	196	216	-	23.6	250	-	202.8	642	149
387-8	72	5,400	190	258	219	240	-	26.0	250	-	198	688	193
411-8	93	5,100	200	272	230	250	-	29.6	300	-	240.8	760	236
447-8	122	4,600	220	299	253	275	-	32.6	300	-	234.8	806	299
495-8	160	4,200	250	340	288	312	-	33.8	300	-	232.4	876	402
546-8	212	3,800	280	381	322	351	-	40.0	300	-	220	944	547
587-8	270	3,500	300	408	345	363	-	45.0	320	-	230	1,010	690
631-8	350	3,300	320	435	368	399	-	48.8	340	-	242.4	1,076	835
495-10	200	4,200	250	340	288	312	-	33.8	300	-	232.4	876	402
546-10	270	3,800	280	381	322	351	-	40	300	-	220	944	547
587-10	352	3,500	300	408	345	363	-	45	320	-	230	1,010	690
631-10	450	3,300	320	435	368	399	-	48.8	340	-	242.4	1,076	834
694-10	630	3,000	350	485	403	435	-	58	400	-	284	1,206	1,213
734-10	760	2,800	370	512	426	459	-	63	440	-	314	1,292	1,463
790-10	950	2,600	400	555	460	496	-	66	470	-	338	1,390	1,837
887-10	1,400	2,300	450	627	518	546	-	78	550	-	394	1,586	2,713
988-10	2,000	2,100	500	696	575	596	-	86	620	-	448	1,770	3,868

Table A-1 : Rated torques, speeds, geometry data and weights of model NEN / NHN / NZN

[1] Maximum bore for parallel keyway in accordance with DIN 6885/1

[2] Pipe diameter, model NEN / NHN
For large distances between shafts (S), the E sleeve can be executed as an H sleeve.
The tube diameters may then deviate slightly

[3] Pipe diameter, model NZN
For large distances between shafts (S), increased required critical bending speed and increased torsional rigidity, the sleeve can be executed as a Z sleeve.
This is achieved by increasing the pipe diameter

[4] Preferred dimension of the model NEN

[5] Minimum dimension of the model NZN

[6] Weight applies to one model NEN coupling with maximum bore

Information

For a deviating LZ dimension, you can calculate the new S dimension as follows:

$S_{new} = LZ_{available} + 2 \times S1$

Information

Torques and speeds may deviate depending on the order.
Follow the instructions in the supplied dimension drawing.
For coupling versions with discs made of the special material AISI 316, reduce the rated torques TKN in the table above by 15%.

A.1.3 Dimension drawing of model BEB

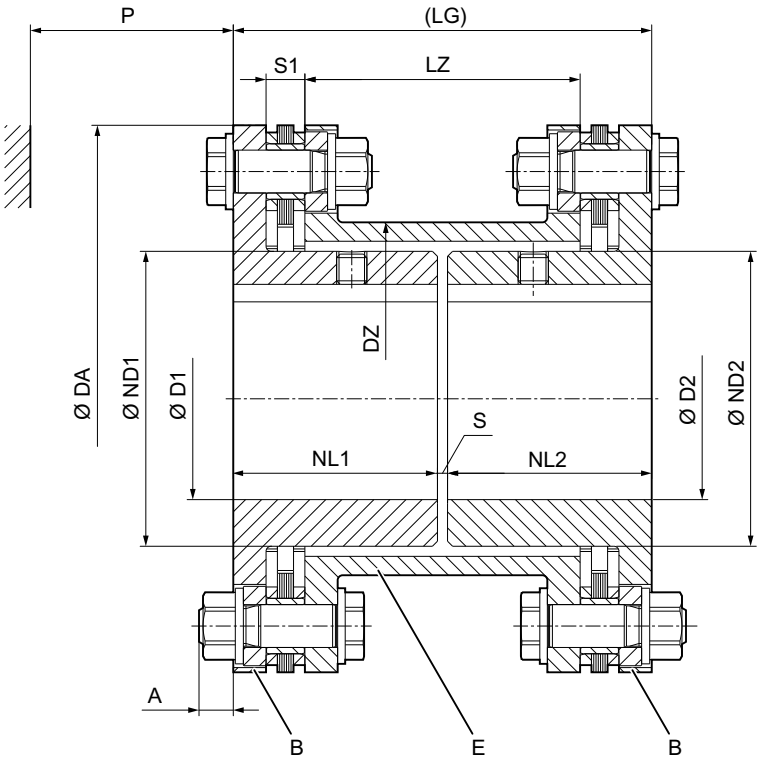

Figure A-2: Model BEB

A.1.4 Technical data of model BEB

Size	Rated torque	Speed	Maximum bore[1]										Weight[2]
DA	T_{KN}	n_{max}	D1 D2	ND1 ND2	NL1 NL2	DZ	S1	S	LZ	A	P	LG	m
	kNm	rpm	mm	mm	mm	mm	mm	mm	mm	mm	mm	mm	kg
86-6	0.35	24000	22	35	30	45	8	12	44	8	32	72	1.5
103-6	0.5	20000	38	50	34	60	8.4	4	43.2	8	32	72	2
122-6	0.95	17000	48	62	56	73	8.8	4	82.4	8	38	116	4.2
133-6	1.25	15000	55	72	56	85	9.6	4	80.8	7	38	116	5.1
159-6	2.1	13000	65	84	57	97	11.6	6	76.8	9	48	120	8.1
174-6	2.5	12000	75	102	77	116	12.8	4	114.4	10	48	158	11.4
184-6	3.8	11000	80	106	80	123	14.6	6	110.8	15	64	166	15.2
203-6	5	10000	85	111	80	128	15.0	6	110	14	64	166	18.2
217-6	6.2	9,500	90	124	81	140	15.4	4	109.2	14	66	166	22
251-6	10.5	8,000	100	137	102	160	20.6	6	138.8	15	77	210	35.6
268-6	13.8	7,500	108	143	105	166	22	12	136	11	89	222	44.8
291-6	18.2	7,000	120	162	106	188	22.8	10	134.4	11	89	222	56.7
318-6	23	6,500	130	164	118	197	23.2	6	153.6	20	100	242	70.2
343-6	28	6,000	150	186	143	223	24.0	6	202	19	100	292	87.7

Table A-2 : Torques, speeds, geometry data and weights of model BEB

[1] Maximum bore for parallel keyway in accordance with DIN 6885/1

[2] Weight applies to one coupling with maximum bore

A.1.5 Dimension drawing of model BEN

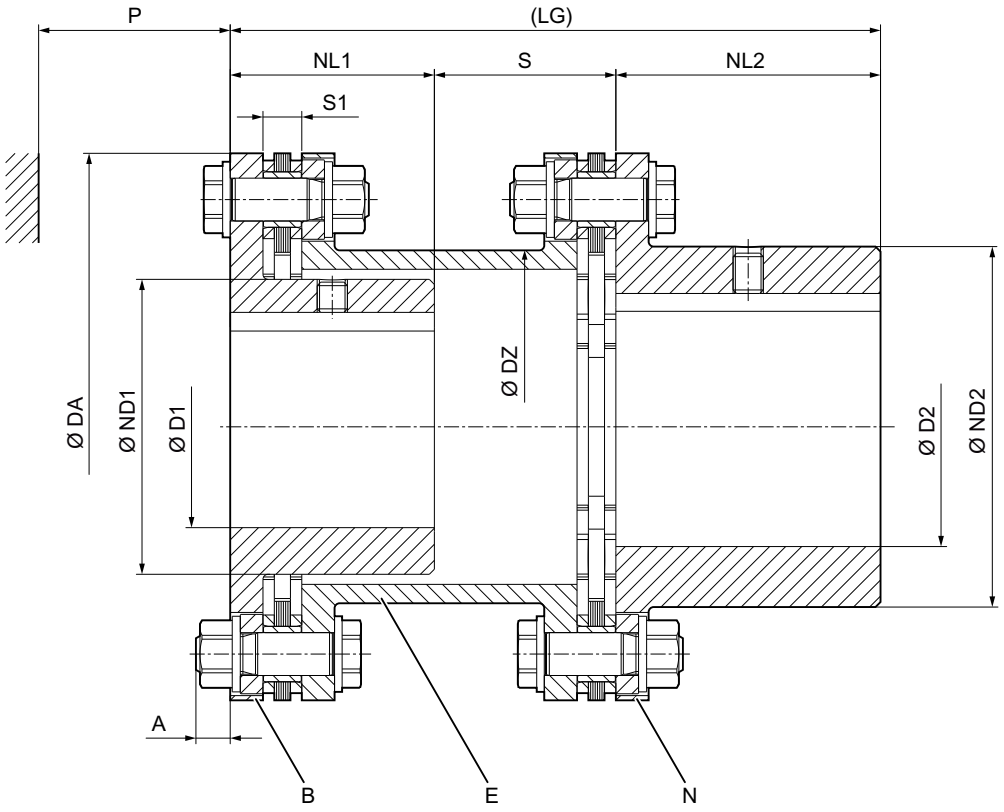

Figure A-3: Model BEN

A.1.6 Technical data of model BEN

Size	Rated torque	Speed	Maximum bore[1)]												Weight[2)]
DA	T_{KN}	n_{max}	D1	D2	ND1	ND2	NL1	NL2	DZ	S1	S	A	P	LG	m
	kNm	rpm	mm	mm	mm	mm	mm	mm	mm	mm	mm	mm	mm	mm	kg
86-6	0.35	24000	22	42	35	56	30	45	45	8	36	8	32	111	1.6
103-6	0.5	20000	38	55	50	73	34	55	60	8.4	32	8	32	121	2.4
122-6	0.95	17000	48	65	62	85	56	65	73	8.8	52	8	38	173	4.7
133-6	1.25	15000	55	75	72	96	56	75	85	9.6	52	7	38	183	5.7
159-6	2.1	13000	65	80	84	104	57	80	97	11.6	53	9	48	190	8.8
174-6	2.5	12000	75	90	102	118	77	85	116	12.8	72	10	48	234	11.9
184-6	3.8	11000	80	95	106	124	80	90	123	14.6	73	15	64	243	15.8
203-6	5	10000	85	100	111	135	80	95	128	15	73	14	64	248	19.7
217-6	6.2	9,500	90	110	124	143	81	105	140	15.4	72	14	66	258	23.2
251-6	10.5	8,000	100	120	137	160	102	110	160	20.6	93	15	77	305	36.8
268-6	13.8	7,500	108	130	143	170	105	130	166	22	96	11	89	331	46.7
291-6	18.2	7,000	120	145	162	190	106	140	188	22.8	95	11	89	341	59.7

Size	Rated torque	Speed	Maximum bore[1)]												Weight[2)]
DA	T_{KN}	n_{max}	D1	D2	ND1	ND2	NL1	NL2	DZ	S1	S	A	P	LG	m
	kNm	rpm	mm	mm	mm	mm	mm	mm	mm	mm	mm	mm	mm	mm	kg
318-6	23	6,500	130	155	164	205	118	150	197	23.2	103	20	100	371	77
343-6	28	6,000	150	170	186	230	143	160	223	24	128	19	100	431	97.8

Table A-3 : Torques, speeds, geometry data and weights of model BEN

[1)] Maximum bore for parallel keyway in accordance with DIN 6885/1

[2)] Weight applies to one coupling with maximum bore

A.1.7 Dimension drawing of model MCECM / MCZCM

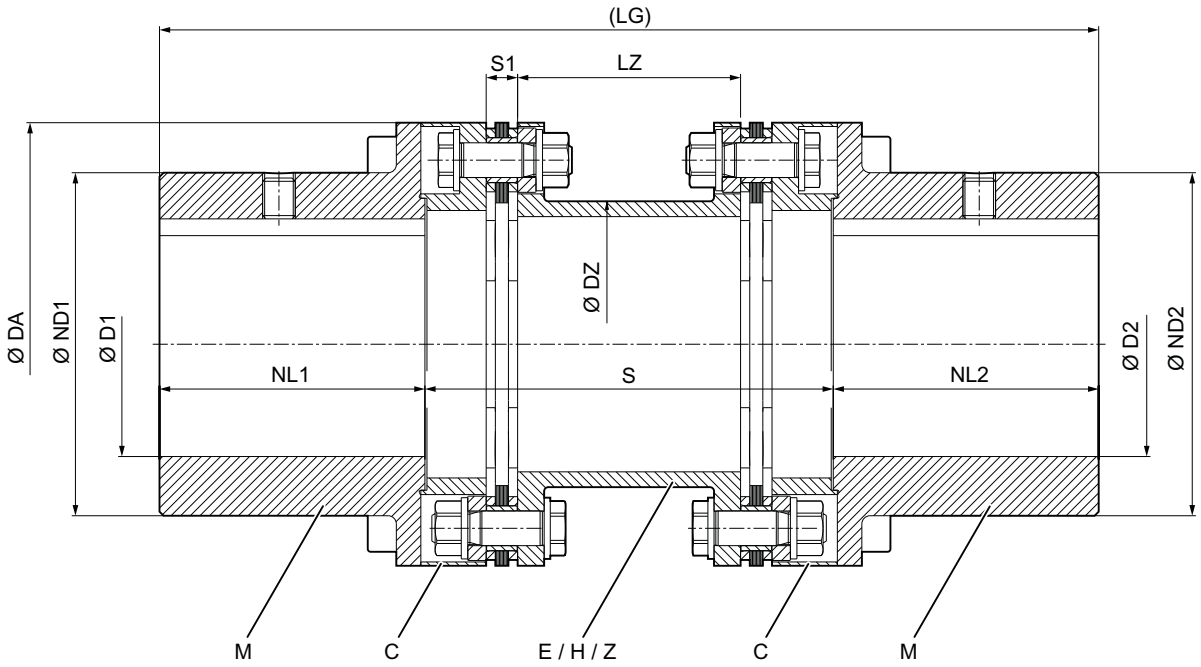

Figure A-4: Model MCECM / MCHCM / MCZCM

A.1.8 Technical data of model MCECM / MCHCM / MCZCM

Size	Rated torque	Speed	Max-imum bore[1]										Weight[6]
DA	T_{KN}	n_{max}	D1 D2	ND1 ND2	NL1 NL2	DZ[2]	DZ[3]	S1	S[4]	S[5]	LZ	LG	m
	kNm	rpm	mm	mm	mm	mm	mm	mm	mm	mm	mm	mm	kg
86-6	0.35	24,000	42	62	42	45	101.6	8	140	479	84	224	3.1
103-6	0.5	20,000	55	72	55	60	114.3	8.4	140	480.6	83.2	250	4.7
122-6	0.95	17,000	70	91	70	73	139.7	8.8	140	500.2	82.4	280	7.7
133-6	1.25	15,000	80	103	80	85	168.3	9.6	140	503.4	80.8	300	9.6
159-6	2.1	13,000	95	123	95	97	177.8	11.6	140	541.4	76.8	330	15.9
174-6	2.5	12,000	105	136	105	116	203	12.8	140	511.2	74.4	350	19.3
184-6	3.8	11,000	110	142	110	123	216	14.6	200	578.4	110.8	420	26.6
203-6	5	10,000	115	150	115	128	219.1	15	200	580	110	430	33.7
217-6	6.2	9,500	130	168	130	140	244.5	15.4	200	587.6	109.2	460	40.3
251-6	10.5	8,000	150	193	150	160	273	20.6	250	652.4	138.8	550	64.4
268-6	13.8	7,500	160	206	160	166	298.5	22	250	708	136	570	78.8
291-6	18.2	7,000	170	221	170	188	323.9	22.8	250	713.2	134.4	590	98.3
318-6	23	6,500	190	245	190	197	343	23.2	300	768.8	153.6	680	139
343-6	28	6,000	205	267	205	223	368	24	300	772	152	710	168
219-8	10	9,500	140	179	140	124	-	12.2	218	-	115.6	498	50.3
241-8	15	8,700	155	201	155	135	-	12.6	222	-	114.8	532	68.2
262-8	20	8,000	165	218	165	148	-	13.8	268	-	152.4	598	89
285-8	27	7,300	185	239	185	162	-	15.2	278	-	149.6	648	115
302-8	35	6,900	190	250	190	174	-	17.2	286	-	145.6	666	140
321-8	43	6,500	205	269	205	189	-	21	312	-	158	722	171
354-8	56	5,900	230	296	230	216	-	23.6	366	-	202.8	826	220
387-8	72	5,400	255	329	255	240	-	26	342	-	198	852	275
411-8	93	5,100	270	347	270	250	-	29.6	394	-	240.8	934	332
447-8	122	4,600	290	375	290	275	-	32.6	402	-	234.8	982	419
495-8	160	4,200	325	423	325	312	-	33.8	406	-	232.4	1,056	561
546-8	212	3,800	360	468	360	351	-	40	414	-	220	1,134	752

Size	Rated torque	Speed	Max-imum bore[1)]										Weight[6)]
DA	T_{KN}	n_{max}	D1 D2	ND1 ND2	NL1 NL2	DZ[2)]	DZ[3)]	S1	S[4)]	S[5)]	LZ	LG	m
	kNm	rpm	mm	mm	mm	mm	mm	mm	mm	mm	mm	mm	kg
587-8	270	3,500	380	499	380	363	-	45	440	-	230	1,200	945
631-8	350	3,300	410	535	410	399	-	48.8	464	-	242.4	1,284	1,146

Table A-4 : Torques, speeds, geometry data and weights of models MCECM / MCHCM / MCZCM

[1)] Maximum bore for parallel keyway in accordance with DIN 6885/1

[2)] Pipe diameter, model MCECM / MCHCM
For large distances between shafts (S), the E sleeve can be executed as an H sleeve
The tube diameters may then deviate slightly.

[3)] Pipe diameter, model MCZCM
For large distances between shafts (S), increased required critical bending speed and increased torsion spring rigidity, the sleeve can be executed as a Z sleeve
This is achieved by increasing the pipe diameter.

[4)] Preferred dimension of the model MCECM

[5)] Minimum dimension of the model MCZCM

[6)] Weight applies to a coupling for model MCECM with maximum bore

Information

For a deviating LZ dimension, you can calculate the new S dimension as follows:

$S_{new} = S_{Table} + LZ_{available} - LZ_{Table}$

Information

Torques and speeds may deviate depending on the order.
Follow the instructions in the supplied dimension drawing.
For coupling versions with discs made of the special material AISI 316, reduce the rated torques TKN in the table above by 15%.

A.1.9 Dimension drawing of model MFEFM / MFHFM / MFZFM

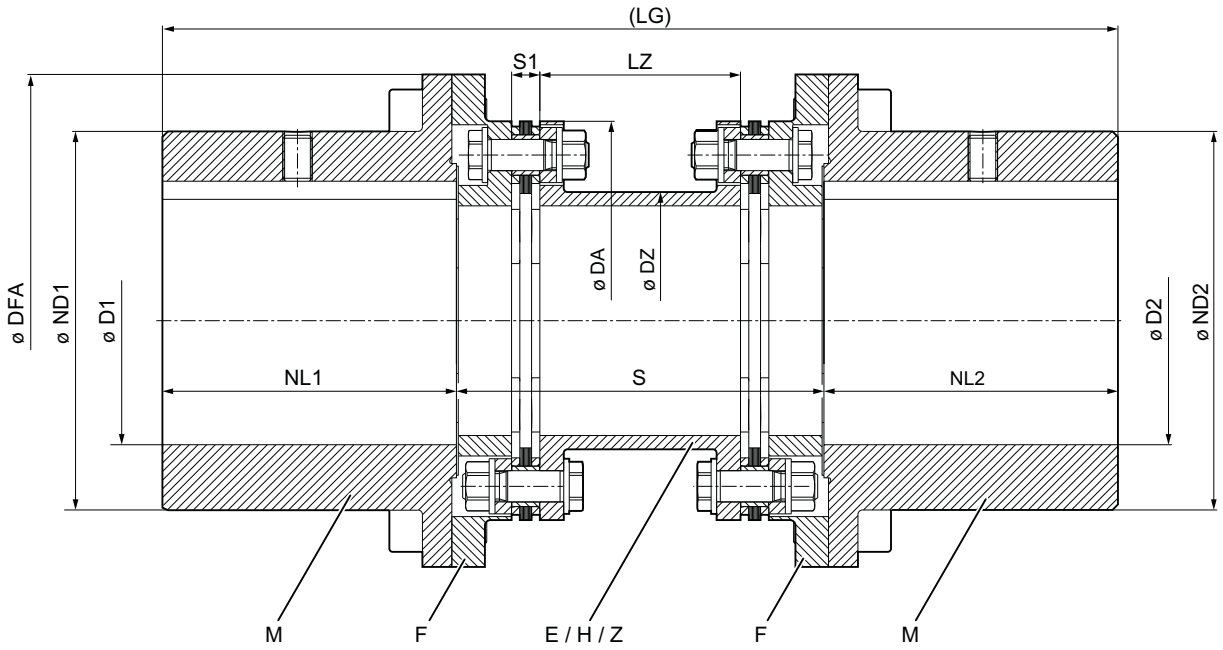

Figure A-5: Model MFEFM / MFHFM / MFZFM

A.1.10 Technical data of model MFEFM / MFHFM / MFZFM

Size	Rated torque	Speed	Max-imum bore[1)]											Weigh t[6)]
DA	T_{KN}	n_{max}	D1 D2	DFA	ND1 ND2	NL1 NL2	DZ[2)]	DZ[3)]	S1	S[4)]	S[5)]	LZ	LG	m
	kNm	rpm	mm	mm	mm	mm	mm	mm	mm	mm	mm	mm	mm	kg
86-6	0.35	17,000	70	122	91	70	45	101.6	8	140	463	84	280	6
103-6	0.5	15,000	80	133	103	80	60	114.3	8.4	140	463.8	83.2	300	8
122-6	0.95	13,000	95	159	123	95	73	139.7	8.8	140	482.6	82.4	330	13.6
133-6	1.25	12,000	105	174	136	105	85	168.3	9.6	140	484.2	80.8	350	17.1
159-6	2.1	10,000	115	203	150	115	97	177.8	11.6	140	519.6	76.8	370	22.9
174-6	2.5	9,500	130	217	168	130	116	203	12.8	140	487	74.4	400	26.8
184-6	3.8	8,000	150	251	193	150	123	216	14.6	200	550	110.8	500	40.1
203-6	5	8,000	150	251	193	150	128	219.1	15	200	550	110	500	52.8
217-6	6.2	7,500	160	268	206	160	140	244.5	15.4	200	557.8	109.2	520	63.4
251-6	10.5	6,500	190	318	245	190	160	273	20.6	250	613.2	138.8	630	109
268-6	13.8	6,000	205	343	267	205	166	298.5	22	250	665	136	660	136
291-6	18.2	5,500	230	356	302	230	188	323.9	22.8	300	715.6	134.4	760	190
318-6	23	5,500	245	375	321	245	197	343	23.2	300	720.8	153.6	790	221
343-6	28	4,500	270	424	354	270	223	368	24	300	722.4	152	840	284
219-8	10	7,800	165	267	219	165	124	-	12.2	218	-	115.6	548	77.7

Size	Rated torque	Speed	Max-imum bore[1]											Weigh t[6]
DA	T_{KN}	n_{max}	D1 D2	DFA	ND1 ND2	NL1 NL2	DZ[2]	DZ[3]	S1	S[4]	S[5]	LZ	LG	m
	kNm	rpm	mm	mm	mm	mm	mm	mm	mm	mm	mm	mm	mm	kg
241-8	15	7,200	185	289	241	185	135	-	12.6	222	-	114.8	592	98.6
262-8	20	6,600	200	314	262	200	148	-	13.8	268	-	152.4	668	131
285-8	27	6,100	215	339	285	215	162	-	15.2	278	-	149.6	708	169
302-8	35	5,900	230	356	302	230	174	-	17.2	286	-	145.6	746	200
321-8	43	5,600	245	375	321	245	189	-	21	312	-	158	802	237
354-8	56	4,900	270	424	354	270	216	-	23.6	366	-	202.8	906	315
387-8	72	4,500	295	457	387	295	240	-	26	342	-	198	932	384
411-8	93	4,300	315	481	411	315	250	-	29.6	394	-	240.8	1,024	460
447-8	122	4,000	340	519	447	340	275	-	32.6	402	-	234.8	1,082	586
495-8	160	3,700	380	567	495	380	312	-	33.8	406	-	232.4	1,166	758
546-8	212	3,300	420	624	546	420	351	-	40	414	-	220	1,254	1,011
587-8	270	3,100	450	669	587	450	363	-	45	440	-	230	1,340	1,270
631-8	350	2,900	480	719	631	480	399	-	48.8	464	-	242.4	1,424	1,581
495-10	200	3,700	380	567	495	380	312	-	33.8	406	-	232.4	1,166	757
546-10	270	3,300	420	624	546	420	351	-	40	414	-	220	1,254	1,010
587-10	352	3,100	450	669	587	450	363	-	45	440	-	230	1,340	1,268
631-10	450	2,900	480	719	631	480	399	-	48.8	464	-	242.4	1,424	1,578
694-10	630	2,600	530	790	694	530	435	-	58	552	-	284	1,612	2,165
734-10	760	2,500	560	830	734	560	459	-	63	604	-	314	1,724	2,586
790-10	950	2,300	600	896	790	600	496	-	66	650	-	338	1,850	3,263
887-10	1,400	2,000	680	1,013	887	680	546	-	78	756	-	394	2,116	4,716
988-10	2,000	1,800	760	1,114	988	760	596	-	86	860	-	448	2,380	6,574

Table A-5 : Torques, speeds, geometry data, and weights of the model MFEFM / MFHFM / MFZFM

[1] Maximum bore for parallel keyway in accordance with DIN 6885/1

[2] Pipe diameter, model MFEFM / MFHFM
For large distances between shafts (S), the E sleeve can be executed as an H sleeve
The tube diameters may then deviate slightly

[3] Pipe diameter, model MFZFM
For large distances between shafts (S), increased required critical bending speed and increased torsional rigidity, the sleeve can be executed as a Z sleeve
This is achieved by increasing the pipe diameter

[4] Preferred dimension of the model MFEFM

[5] Minimum dimension of the model MFZFM

[6] Weight applies to a coupling for model MFEFM with maximum bore

Information

For a deviating LZ dimension, you can calculate the new S dimension as follows:

$S_{new} = LZ_{available} + 2 \times S1$

Information

Torques and speeds may deviate depending on the order.
Follow the instructions in the supplied dimension drawing.
For coupling versions with discs made of the special material AISI 316, reduce the rated torques TKN in the table above by 15%.

A.1.11 Dimension drawing of the complete clamping hub

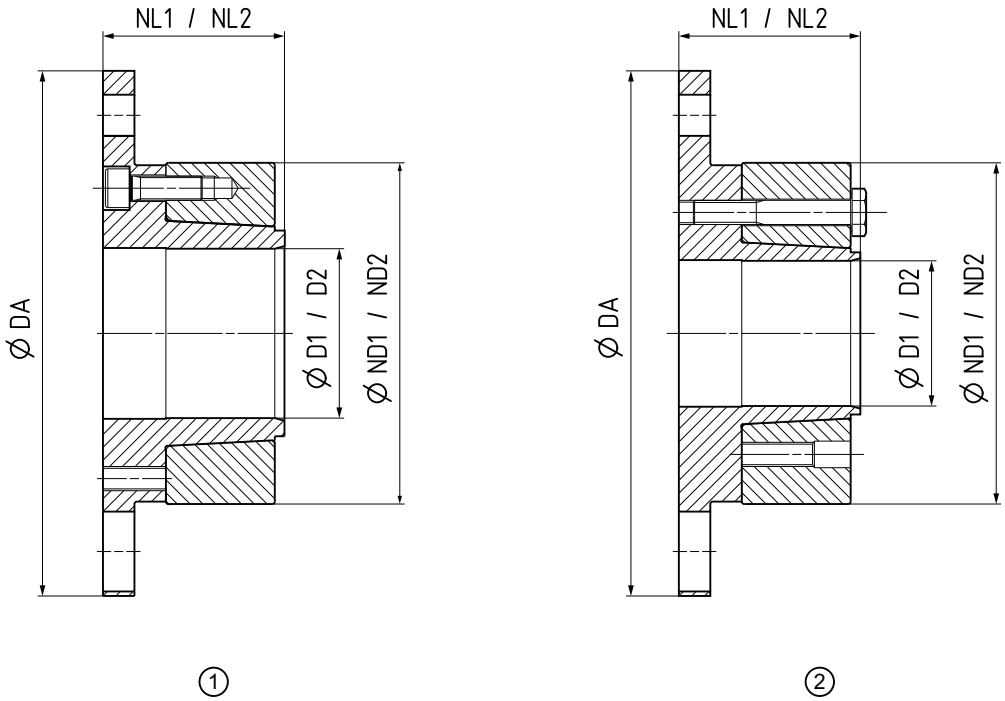

Figure A-6: Clamping hub

① Clamping hub, model 125
② Clamping hub, model 124

A.1.12 Technical data of the complete clamping hub

Size	Clamping hub	Bore					Weight[1]
	Model	D1 / D2		DA	ND1 ND2	NL1 NL2	m
		min.	max.				
		mm	mm	mm	mm	mm	kg
86-6	124	19	25	86	50	35	0.5
	125						
103-6	124	25	38	103	67	40	0.9
	125						
122-6	124	30	42	122	77	45	1.5
	125						
133-6	124	32	50	133	88	50	2.0
	125						
159-6	124	35	60	159	105	55	3.2
	125						
174-6	124	40	70	174	120	65	4.6
	125						
184-6	124	45	70	184	126	70	5.9
	125						
203-6	124	50	80	203	139	75	7.4
	125						
217-6	124	60	90	217	147	90	9.2
	125						
251-6	124	70	95	251	168	95	14.0
	125						
268-6	124	75	100	268	175	115	18.5
	125						
291-6	124	80	120	291	195	125	22.9
	125						
318-6	124	85	120	318	209	140	31.5
	125						
343-6	124	95	140	343	234	150	39.6
	125						

Table A-6 : Speeds, geometry data and weights of the complete clamping hub

[1] Weight applies to one clamping hub with maximum bore.

Bore 1) D1 / D2 mm	Size													
	86-6	103-6	122-6	133-6	159-6	174-6	184-6	203-6	217-6	251-6	268-6	291-6	318-6	343-6
	Rated coupling torque T_{KN} Nm													
	350	500	950	1,250	2100	2,400	3,800	5,000	6,200	10500	13800	18200	23000	28000
	Maximum torque that can be transmitted by the clamping hub Nm													
19	400	-	-	-	-	-	-	-	-	-	-	-	-	-
20	460	-	-	-	-	-	-	-	-	-	-	-	-	
22	470	-	-	-	-	-	-	-	-	-	-	-	-	
24	350	-	-	-	-	-	-	-	-	-	-	-	-	
25	370	480	-	-	-	-	-	-	-	-	-	-	-	-
28	-	870	-	-	-	-	-	-	-	-	-	-	-	-
30	-	1,150	1,770	-	-	-	-	-	-	-	-	-	-	-
32	-	1,140	1830	2,300	-	-	-	-	-	-	-	-	-	-
35	-	570	1,420	2,360	3,050	-	-	-	-	-	-	-	-	-
38	-	830	1,720	3,040	2,710	-	-	-	-	-	-	-	-	-
40	-	-	1,370	2,610	3,660	3,680	-	-	-	-	-	-	-	-
42	-	-	1,670	2,930	2,180	4,020	-	-	-	-	-	-	-	-
45	-	-	-	2,120	3,750	4,110	5,780	-	-	-	-	-	-	-
48	-	-	-	2,480	4,160	4,930	6,200	-	-	-	-	-	-	-
50	-	-	-	2,240	2,300	4,300	5,840	7,190	-	-	-	-	-	-
55	-	-	-	-	3,310	5,370	6,410	7,970	-	-	-	-	-	-
60	-	-	-	-	3,260	3,730	5,370	8,840	7,570	-	-	-	-	-
65	-	-	-	-	-	4,700	6,240	8,890	10390	-	-	-	-	-
70	-	-	-	-	-	4,150	5,920	8,460	10640	14050	-	-	-	-
75	-	-	-	-	-	-	-	7,960	9,590	15350	20710	-	-	-
80	-	-	-	-	-	-	-	7,340	8,850	13510	20120	31840	-	-
85	-	-	-	-	-	-	-	-	7,890	16370	21130	31230	36420	-
90	-	-	-	-	-	-	-	-	6,290	14300	20810	33300	39050	-
95	-	-	-	-	-	-	-	-	-	13310	18570	33530	35940	54230
100	-	-	-	-	-	-	-	-	-	-	14440	31710	37500	56580
110	-	-	-	-	-	-	-	-	-	-	-	29020	35200	56900
120	-	-	-	-	-	-	-	-	-	-	-	22600	31490	53580
130	-	-	-	-	-	-	-	-	-	-	-	-	-	50910
140	-	-	-	-	-	-	-	-	-	-	-	-	-	43600

Table A-7 : Maximum torque that can be transmitted by the clamping hub depending on the finished bore

1) Finished bore / shaft with standard G6 / h6 fit.

Information

Risk of explosion when the maximum torque that can be transmitted by the friction-locked connection is exceeded

The maximum torque that can occur in operation must not exceed the maximum torque that can be transmitted using the friction-locked connection.

The maximum torques that can be transmitted for the clamping hub listed here are applicable for the standard G6/h6 fit.

Contact Flender for different finished bores and/or fit pairs.

A.2 Shaft misalignment values during operation

The following table shows the maximum permissible shaft misalignment values ΔKa_{perm} and ΔKw_{perm}. The values are rounded and specified in mm.

Size	Permissible angular misalignment $\pm\Delta Kw_{perm}$										
	0°	0.1°	0.2°	0.3°	0.4°	0.5°	0.6°	0.7°	0.8°	0.9°	1°
	Permissible axial misalignment $\pm\Delta Ka_{perm}$ in mm										
86-6	1.2	1.1	1	0.8	0.7	0.6	0.5	0.4	0.2	0.1	0
103-6	1.4	1.3	1.1	1	0.8	0.7	0.6	0.4	0.3	0.1	0
122-6	2	1.8	1.6	1.4	1.2	1	0.8	0.6	0.4	0.2	0
133-6	2.2	2	1.8	1.5	1.3	1.1	0.9	0.7	0.4	0.2	0
159-6	2.6	2.3	2.1	1.8	1.6	1.3	1	0.8	0.5	0.3	0
174-6	3	2.7	2.4	2.1	1.8	1.5	1.2	0.9	0.6	0.3	0
184-6	3.2	2.9	2.6	2.2	1.9	1.6	1.3	1	0.6	0.3	0
203-6	3.4	3.1	2.7	2.4	2	1.7	1.4	1	0.7	0.3	0
217-6	3.4	3.1	2.7	2.4	2	1.7	1.4	1	0.7	0.3	0
251-6	4.1	3.7	3.3	2.9	2.5	2.1	1.6	1.2	0.8	0.4	0
268-6	4.2	3.8	3.4	2.9	2.5	2.1	1.7	1.3	0.8	0.4	0
291-6	4.6	4.1	3.7	3.2	2.8	2.3	1.8	1.4	0.9	0.5	0
318-6	5	4.5	4	3.5	3	2.5	2	1.5	1	0.5	0
343-6	5.3	4.8	4.2	3.7	3.2	2.7	2.1	1.6	1.1	0.5	0
219-8	1.7	1.28	0.85	0.43	0						
241-8	1.9	1.43	0.95	0.48	0						
262-8	2.1	1.58	1.05	0.53	0						
285-8	2.2	1.65	1.1	0.55	0						
302-8	2.4	1.8	1.2	0.6	0						
321-8	2.5	1.88	1.25	0.63	0						
354-8	3	2.25	1.5	0.75	0						
387-8	3.3	2.48	1.65	0.83	0						
411-8	3.4	2.55	1.7	0.85	0						
447-8	2.5	1.88	1.25	0.63	0						
495-8	3	2.25	1.5	0.75	0						

Size	Permissible angular misalignment $\pm\Delta Kw_{perm}$										
	0°	**0.1°**	**0.2°**	**0.3°**	**0.4°**	**0.5°**	**0.6°**	**0.7°**	**0.8°**	**0.9°**	**1°**
	Permissible axial misalignment $\pm\Delta Ka_{perm}$ in mm										
546-8	3.4	2.55	1.7	0.85	0						
587-8	3.6	2.7	1.8	0.9	0						
631-8	3.8	2.85	1.9	0.95	0						
495-10	2	1.33	0.67	0							
546-10	2.3	1.53	0.77	0							
587-10	2.4	1.6	0.8	0							
631-10	2.5	1.67	0.83	0							
694-10	2.7	1.35	0								
734-10	2.8	1.4	0								
790-10	3	1.5	0								
887-10	3.5	1.75	0								
988-10	3.9	1.95	0								

Table A-8 : Maximum permissible shaft misalignment values during operation

The maximum permissible radial misalignment ΔKr_{perm} depends on the distance between shafts S.

Calculate the permissible radial misalignment ΔKr_{perm} as follows:

Model NEN, KEN, KEK, NHN, KHN, KHK, NZN, KZN, KZK:
$\Delta Kr_{perm} = (S - S1) \times \tan(\Delta Kw_{perm})$

Model BEB, BEN, BEK, MCECM, MFEFM, MCHCM, MFHFM, MCZCM, MFZFM:
$\Delta Kr_{perm} = (LZ + S1) \times \tan(\Delta Kw_{perm})$

Information

The permissible shaft misalignments ΔKa_{perm}, ΔKr_{perm} and ΔKw_{perm} are maximum values, and they must not occur simultaneously.
For coupling versions with axial backlash limitation, note the reduced values for the permissible shaft misalignments. The values can be found in the order-related coupling drawing.

A.3 Tightening torques and widths A/F

For tightening torques for bolt connection of the plate packs, refer to the associated mounting instructions provided in Section Assembling the plate pack (Page 47).

A.3.1 Bolt connection C flange with the M hub

Size	Bolt (91)	Tightening torque	Width across flats Hexagon socket wrench
		T_A	SW
		Nm	mm
86-6	M6	10	5
103-6	M8	25	6
122-6	M8	25	6
133-6	M8	25	6
159-6	M10	49	8
174-6	M10	49	8
184-6	M12	86	10
203-6	M14	135	12
217-6	M14	135	12
251-6	M16	210	14
268-6	M18	290	14
291-6	M20	410	17
318-6	M22	560	17
343-6	M22	560	17
219-8	M8	30	5
241-8	M8	30	5
262-8	M10	50	6
285-8	M10	50	6
302-8	M10	50	6
321-8	M10	50	6
354-8	M12	100	8
387-8	M12	100	8
411-8	M12	100	8
447-8	M16	220	10
495-8	M16	220	10
546-8	M16	220	10
587-8	M20	370	12
631-8	M20	370	12

Table A-9 : Tightening torques and widths across flats for the bolt connection C flange with the M hub

Apply the specified tightening torques as listed in Section Tightening procedure (Page 94).

A.3.2 Bolt connections F flange with the M hub

Size	ARN-6 ARN-8 ARN-10		Tightening torque	Width A/F Hexagon socket wrench	Width A/F External hexagon
	Bolt (91)	Nut (92)	T_A Nm	SW mm	SW mm
86-6	M8		25	6	
103-6	M8		25	6	
122-6	M10		49	8	
133-6	M10		49	8	
159-6	M14		135	12	
174-6	M14		135	12	
184-6	M16		210	14	
203-6	M16		210	14	
217-6	M18		290	14	
251-6	M22		560	17	
268-6	M22		560	17	
291-6		M12	86		19
318-6		M12	86		19
343-6		M16	210		24
219-8		M10	49		17
241-8		M10	49		17
262-8		M12	86		19
285-8		M12	86		19
302-8		M12	86		19
321-8		M12	86		19
354-8		M16	210		24
387-8		M16	210		24
411-8		M16	210		24
447-8		M16	210		24
495-8		M16	210		24
546-8		M18	290		27
587-8		M18	290		27
631-8		M20	410		30
495-10		M16	210		24
546-10		M18	290		27
587-10		M18	290		27
631-10		M20	410		30
694-10		M22	560		32
734-10		M22	560		32
790-10		M24	710		36

Size	ARN-6 ARN-8 ARN-10 Bolt (91)	Nut (92)	Tightening torque T_A Nm	Width A/F Hexagon socket wrench SW mm	Width A/F External hexagon SW mm
887-10		M30	1,200		46
988-10		M30	1,200		46

Table A-10 : Tightening torques and widths across flats for the bolt connection F flange with the M hub

Apply the specified tightening torques as listed in Section Tightening procedure (Page 94).

A.3.3 Bolt connection of the complete clamping hub

Size	Tensioning screw	Tightening torque	Width across flats	
			Model 124	Model 125
		T_A Nm	Hexagon head bolt SW mm	Hexagon socket wrench SW mm
86-6	M5	8	8	4
103-6	M6	14	10	5
122-6	M6	14	10	5
133-6	M8	35	13	6
159-6	M8	35	13	6
174-6	M10	69	17	8
184-6	M10	69	17	8
203-6	M12	120	19	10
217-6	M12	120	19	10
251-6	M12	120	19	10
268-6	M12	120	19	10
291-6	M16	290	24	14
318-6	M16	290	24	14
343-6	M16	290	24	14

Table A-11 : Tightening torques and widths across flats for the bolt connection of the complete clamping hub

Apply the specified tightening torques as listed in Section Tightening procedure (Page 94).

A.4 Tightening procedure

Tightening torques must be observed taking into account the following table:

Scatter of the torque applied at the tool	Tightening procedure (As a rule, the tightening procedures listed are within the specified tool torque scatter.)
±5 %	• Hydraulic tightening with mechanical screwdriver • Torque-controlled tightening with a torque wrench or a torque wrench that gives a signal • Tightening with a precision mechanical screwdriver with dynamic torque measurement

Table A-12 : Tightening procedure

Information

The tightening torques apply to:

- Screws with untreated surfaces that are not oiled or are only lightly oiled. Use of lubricant coating or lubricant is not permitted.
- Screws that should be used with screw locking agent.

A.5 Lubricant

Lubricant paste	Manufacturer
OPTIMOL OPTIMOLY PASTE PL	Castrol Industrie GmbH 41179 Mönchengladbach Germany
LP 430	Microgleit GmbH 74357 Bönnigheim Germany
Klüberpaste ALTEMP QNB 50	Klüber Lubrication KG 81379 Munich Germany
Klüberpaste 46 MR 401	Klüber Lubrication KG 81379 Munich Germany
MOLYCOTE G-RAPID PLUS PASTE	Dow Corning Europe S.A. 7180 Seneffe Belgium

Declaration of conformity

B

EU Declaration of Conformity

Product:

FLENDER N-ARPEX® Couplings
Models ARN-6, ARN-8, ARN-10

Name and address of the manufacturer:

Flender GmbH
Schlavenhorst 100
46395 Bocholt
Germany

This Declaration of Conformity is issued under the sole responsibility of the manufacturer.

This declaration refers to the product mentioned above.

The object of the declaration described above is in conformity with the relevant EU harmonisation legislation:
– Directive 2014/34/EU, Official Journal L 96, 29 March 2014, Pages 309-356

Harmonised standards or other technical specifications on which the Declaration of Conformity is based:

EN 1127-1	: 2019
EN 1127-2	: 2014
EN ISO 80079-36	: 2016
EN ISO 80079-37	: 2016
EN ISO/IEC 80079-38	: 2016

Notified Body, DEKRA Testing and Certification GmbH (0158) has received the technical documentation.

Signed for and on behalf of:

Flender GmbH



Bocholt, 2026-07-21

Dr Dennis Geers, President, Business Unit Couplings

FLENDER COUPLINGS

N-ARPEX
Assembly and operating instructions M8714-01en
Version 07/2026

Flender GmbH
Alfred-Flender-Strasse 77
46395 Bocholt
Germany

FLENDER