FLENDER GEAR UNITS

Helical gear unit for drive systems for tubular mills

Assembly and operating instructions A9111-01en
Edition 06/2022

MDSS

1...3

flender.com

FLENDER

Original assembly and operating instructions

A9111-01
Edition 06/2022

Copyright (©2022 Flender GmbH)

V5
25/07/2022
16:26:30

Table of contents

1 Introduction 11

1.1 Legal information 11

1.2 General information 12

1.3 Lubricants 14

2 Safety instructions 15

2.1 Security notes 15

2.2 The five safety rules 15

2.3 General information 15

2.4 General warnings and symbols 17

2.5 Special types of danger and personal protective equipment 17

2.6 Intended use 20

3 Description 23

3.1 General description 23

3.2 Housing 23

3.3 Oil supply to the gear unit 25

3.4 Bearing arrangement of the shafts 25

3.5 Shaft seal 25

3.5.1 Tacolab seal 26

3.6 Cooling 27

3.6.1 Separate or external oil supply system 27

3.7 Couplings 27

3.8 Heating 28

3.9 Oil level indicator 29

3.10 Oil temperature monitoring 29

3.11 Bearing monitoring 30

3.11.1 Bearing monitoring using a Pt 100 resistance thermometer 30

3.11.2 Bearing monitoring by shock-pulse transducer 31

3.11.3 Bearing monitoring by acceleration sensor 31

4 Application planning 35

4.1 Scope of delivery 35

4.2 Transport ... 35
4.3 Attachment points ... 37
4.4 Special aspects of gear unit lubrication and preservation ... 39
4.4.1 Oil filling and oil drain ... 39
4.4.2 Preservation of gear units with Tacolab seals ... 39

5 Assembly ... 41

5.1 General assembly instructions ... 41
5.2 Unpacking the gear unit ... 42
5.3 Gear unit assembly ... 43
5.3.1 Foundation ... 43
5.3.2 Description of assembly work ... 44
5.3.2.1 Alignment ... 45
5.3.3 Mounting the gear unit on the housing mounting foot ... 46
5.3.3.1 Installation on a foundation frame ... 46
5.3.3.2 Mounting on a concrete foundation using stone bolts or foundation blocks ... 48
5.3.3.3 Mounting on a concrete foundation using anchor bolts ... 50
5.4 Couplings ... 52
5.4.1 Assembling the coupling ... 53
5.4.2 Aligning the coupling ... 54
5.5 Connecting components ... 56
5.5.1 Gear units with mounted components ... 56
5.5.2 Installing a separate oil supply system ... 56
5.5.3 Connecting the pressure monitor ... 56
5.5.4 Heating element connection ... 57
5.5.5 Connecting the oil temperature monitor ... 57
5.5.6 Connecting the bearing monitoring system ... 57
5.5.7 Electrical connections ... 58
5.6 Tightening procedure ... 58
5.6.1 Introduction ... 58
5.6.2 Bolt connection classes ... 59
5.6.3 Tightening torques and preload forces ... 60
5.7 Final work ... 61

6 Commissioning ... 63

6.1 Measures prior to commissioning ... 63
6.1.1 Gear units with oil supply system ... 63
6.2 Measures during commissioning ... 63
6.2.1 Running the gear unit for the first time ... 64
6.2.2 Heating ... 64

7 Operation 67
7.1 Operating data 67
7.2 Irregularities in operation 67
7.3 Taking the unit out of service 68
8 Servicing 69
8.1 General maintenance information 69
8.2 Maintenance schedule 69
8.3 Maintenance and servicing work 71
8.3.1 Cleaning the gear unit 71
8.3.2 Cleaning the air filter and replacing the air filter element 71
8.3.2.1 Cleaning the air filter 71
8.3.2.2 Replacing the air filter element 72
8.3.3 Checking the oil temperature 72
8.3.4 Measuring the vibration levels of the rolling-contact bearings 72
8.3.5 Measuring the temperature at the rolling-contact bearings 73
8.3.6 Check that all of the fastening bolts are tight 73
8.3.7 General inspection of the gear unit 73
8.3.8 Final work 74
8.4 Possible faults 74
9 Service & Support 79
9.1 Contact 79
10 Disposal 81
11 Spare parts 83
A Declaration of incorporation 85
A.1 Declaration of Incorporation 85
B Technical data 87
B.1 General technical data 87
B.2 Ambient temperature 88
B.3 Weights 88
B.4 Enveloping surface sound pressure level 88
Index 91

List of tables

Table 2-1	Symbols and markings	16
Table 2-2	General warnings	17
Table 3-1	Designs and associated directions of rotation	23
Table 3-2	Information about the specific heat output	28
Table 5-1	Information on screwing fastening bolts	59
Table 5-2	Preload forces and tightening torques	60
Table 7-1	Operating values	67
Table 8-1	Maintenance and servicing activities	69
Table 8-2	Possible faults and how to rectify them	74

List of figures

Figure 3-1 Plate: Lubrication point 24
Figure 3-2 Gear unit components on a model MDSS gear unit 24
Figure 3-3 Tacolab seal 26
Figure 3-4 Oil-temperature monitoring system for gear units, model MDSS 30
Figure 3-5 Bearing monitoring using a Pt 100 resistance thermometer 31
Figure 3-6 Fully assembled accelerometer (A), and threaded connection (B) for variants 1 to 4 32
Figure 3-7 Complete accelerometer (C) and threaded connection (D) for variants 5A and 5B 32
Figure 4-1 Transport symbols 37
Figure 4-2 Attachment points on a gear unit, model MDSS 38
Figure 4-3 Oil filling and draining points on the MDSS type gear unit 39
Figure 4-4 Preservation of gear units with Tacolab seals 40
Figure 5-1 Gap dimension at grease labyrinth 44
Figure 5-2 Alignment surface 45
Figure 5-3 Alignment surfaces and alignment screws for gear units, model MDSS 46
Figure 5-4 Stone bolt 48
Figure 5-5 Foundation block 49
Figure 5-6 Inserted anchor bolt 50
Figure 5-7 Tightened anchor bolt 51
Figure 5-8 Possible misalignments 55
Figure 5-9 Alignment, based on the example of a flexible coupling 55
Figure B-1 Rating plate 87

Introduction

1

Naming convention

This product, which can be used as a gear reduction unit or multiplier gear unit, is referred to below as "gear unit".

1.1 Legal information

Warning system

These instructions contain information you must observe for your own personal safety as well as to avoid damage to property and persons. The information regarding your personal safety is highlighted with a warning triangle. Information exclusively regarding property damage alone is not marked with a warning triangle. Depending on the hazard class, the warnings shall be depicted as follows, in descending order.

⚠ DANGER

means that death or severe physical injury **will** occur if the relevant precautionary measures are not taken.

⚠ WARNING

means that death or severe physical injury **may** occur if the relevant precautionary measures are not taken.

⚠ CAUTION

means that mild physical injury may occur if the relevant precautionary measures are not taken.

NOTICE

means that damage to property may occur if the relevant precautionary measures are not taken.

If multiple hazard classes come into play, the warning for the highest level in question shall always be used. If a warning containing the warning triangle warns of harm to individuals, the same warning may also include a warning regarding damage to property.

Information

Information

Information offers additional notes, assistance and tips for handling the product.

Qualified personnel

The product/system associated with this documentation may only be used by **qualified personnel** trained to perform the relevant tasks, taking into account the associated documentation for the relevant tasks, particularly the safety information and warnings included therein. Due to their qualification and experience, qualified personnel are capable of detecting risks and avoiding potential hazards when dealing with these products/systems.

Intended use of Flender products

Please note the following:

⚠ WARNING

Flender products are only suitable for the uses set out in the catalogue and associated technical documentation. If third-party products and components are used, these must be recommended and/or authorised by Flender. Safe and flawless operation of the products requires proper transport, proper storage, setup, assembly, installation, commissioning, operation and maintenance. The permissible environmental conditions must be adhered to. Instructions in the associated documentation must be followed.

Trademarks

All designations marked with the trademark symbol ® are registered trademarks of Flender GmbH. Other designations in this document may be trademarks whose use by third parties for their own purposes may violate the rights of the owner.

Liability disclaimer

We have assessed the contents of these instructions for compliance with the hardware and software described. However, deviations cannot be ruled out, so we are unable to accept liability for full compliance. The details in these instructions are regularly reviewed and necessary corrections are contained in subsequent editions.

1.2 General information

Purpose of these instructions

These instructions describe the gear unit and provide information about its handling – from assembly to maintenance.

Please keep these instructions for later use. Please read these instructions prior to handling the gear unit and observe the information they contain.

Information

Liability disclaimer

Please make sure that every person who is commissioned to work on the gear unit has read and understood these instructions prior to handling the gear unit and adheres to all of the points. Non-adherence to the instructions can cause product or property damage or personal injury.

Flender accepts no liability for damages and disruption to operations that result from non-adherence to the instructions.

The described gear unit represents the state of the art at the time these instructions were printed.

In the interest of further development, Flender reserves the right to make such changes to the individual assembly units and accessories that increase performance and safety whilst maintaining the essential features.

Required basic knowledge

In order to understand these instructions, you will need the following general knowledge about gear units. You will also need a basic understanding of the following topics:

- Application planning
- Assembly
- Commissioning
- Maintenance

Documentation landscape

These instructions are part of the delivery of your gear unit.

These instructions form part of the complete documentation supplied with the gear unit. The complete documentation encompasses other documents, including:

- Data sheet
- List of equipment
- Dimension drawing
- Instructions 7300 on gear unit lubrication and preservation
- Instructions for mounted components
- Instructions for devices from third parties

Copyright

The copyright of these instructions is held by Flender.

Without the authorisation of Flender, these instructions may not be used wholly or in parts for competitors' purposes or be given to third parties.

If you have any technical queries, please contact the Customer Services address (Page 79).

1.3 Lubricants

The quality of the oil used must meet the requirements of the instructions 7300, which is provided as a separate item, otherwise the warranty provided by Flender will be void. Flenderurgently recommends that one of the oil types listed in instructions 7300, which have been appropriately tested and comply with the requirements, is used.

To avoid misunderstandings, Flender points out that, by making this recommendation, it is not approving the product in the sense of expressing a warranty for the quality of the lubricants supplied by your supplier. Every lubricant manufacturer is required to guarantee the quality of his/her products.

Information such as oil type, oil viscosity and required oil quantity can be found on the rating plate of the gear unit and in the documentation supplied with the gear unit.

The oil quantity specified on the rating plate is an approximate value. The actual quantity of oil required is determined by the marking on the oil dipstick or oil sight glass.

The instructions for the current lubricant recommendations of Flender can also be viewed on the Internet (https://www.flender.com/lubricants).

The oils listed there undergo continuous testing. As a result, the recommended oil types might in future be removed from the list or replaced by more advanced oils.

Flender recommends regular inspection to ascertain whether the selected lubricating oil is still approved by Flender. If it is not, another brand of oil should be selected instead.

Safety instructions 2

2.1 Security notes

Flender offers products and solutions with industrial security functions, which support the safe and secure operation of plants, systems, machines and networks.

In order to safeguard plants, systems, machines and networks against cyber threats it is necessary to implement (and continually maintain) a holistic industrial security concept that corresponds to the current state of the art. Flender products and solutions undergo continuous development in this respect.

Customers are responsible for preventing unauthorised access to their plants, systems, machines and networks. These systems, machines and components shall be connected to the company network or the Internet only when and to the extent that this is absolutely necessary and appropriate protective measures (e.g. firewalls and/or network segmentation) shall be taken.

You can find further information about possible protection measures as part of Industrial Security in the following international series of standards, for example: IEC 62443 "Network and system security".

Flender products and solutions undergo continuous development in order to make them even safer. Flender strongly recommends that you regularly implement product updates as soon as they become available and that you only use the current product versions. Use of older or no longer supported versions can increase the risk of cyber threats.

2.2 The five safety rules

In order to protect yourself and prevent any damage to property, always observe the safety relevant information and the following five safety rules (as per EN 50110-1 "Working on isolated equipment") when working on electrical components of the plant.

Prior to starting work on the machine, follow the safety rules listed below:

1. Disconnect
   Also disconnect auxiliary circuits such as the anti-condensation heater
2. Safeguard against restart
3. Ensure that the system is de-energised
4. Earth and short circuit
5. Cover or cordon off adjacent live parts

When all the work is complete, cancel the safety measures in the reverse sequence.

2.3 General information

Introduction

All work on the gear unit should be performed with care and only by qualified personnel.

Symbols on the gear unit

The following symbols apply to the gear unit; some of which are found as coloured markings on the gear unit:

Points labelled on the gear unit	**Symbol**	**Coloured markings**
Earth connection point		
Air relief point		yellow
Oil filling point		yellow
Oil draining point		white
Oil level indicator		red
Oil level measurement		red
Oil overflow		
Connection point for vibration monitoring		
Lubrication point		red
Apply grease		
Lifting eye		
Eye bolt		
Do not unscrew		
Alignment surface, horizontal		
Alignment surface, vertical		
These symbols indicate the oil level checking procedure using the oil dipstick.	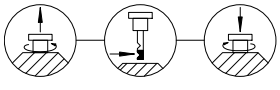	

Points labelled on the gear unit	Symbol	Coloured markings
These symbols indicate that the oil dip-stick must be firmly screwed in.	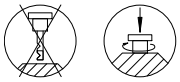	

Table 2-1: Symbols and markings

2.4 General warnings and symbols

The following table contains general warnings and their associated symbols.

ISO	ANSI	Warning
		Warning – hazardous electrical voltage
		Warning – explosive substances
	---	Warning – entanglement hazard
	---	Warning – hot surfaces
	---	Warning – corrosive substances
	---	Warning – suspended load
	---	Warning – hand injuries

Table 2-2: General warnings

2.5 Special types of danger and personal protective equipment

Requirements

Fulfil the following requirements before commencing work on the gear unit:

- Ensure that the oil pressure lines are depressurised.
- Only perform work on the gear unit when it is not in operation.
- Disconnect electrical systems from the power supply.



⚠ DANGER

Electric shock

Live parts can cause electric shock.

Ensure that the entire plant is de-energised before starting electrical installation work.

Protective equipment

Wear the following personal protective equipment when handling the gear unit:

- Safety shoes
- Overalls
- Helmet
- Safety gloves
- Safety goggles

⚠ WARNING

Risk of eye injury

Small foreign particles such as sand or dust can enter the cover plates of the rotating parts and be hurled back by them.

Wear safety goggles.

Dangers during operation

Damage to the gear unit is possible.

Switch the gear unit to standstill immediately if inexplicable changes are noticed during operation. Such changes may include unusual gear unit noise or a significant increase in operating temperature.

⚠ WARNING

Risk of falling

There is an increased risk of falling when standing or walking on the gear unit during operation.

Only walk or stand on the gear unit and its mounted components for maintenance and repair work when it is at a standstill. Do not walk or stand on shaft ends, protection covers, mounted components or pipes.



⚠ WARNING

Danger to life through rotating or moving parts

There is danger that rotating or moving parts may catch hold of you or pull you in.

Secure rotating and/or moving parts against contact using safeguards.

Surface temperature

The surface temperatures of the gear unit can become very extreme depending on the operating conditions.



⚠ WARNING

Risk of burns

Possible risk of serious burn injury from hot surfaces (> 55 °C).

Wear suitable protective gloves and protective clothing.

⚠ WARNING

Risk of scalding

Risk of serious injury possible through escaping hot operating media when these are being changed.

Wear suitable protective gloves, safety goggles and protective clothing.

⚠ WARNING

Danger due to low temperatures

Possible risk of serious injuries due to frost (pain, numbness, frostbite) on cold surfaces (< 0 °C).

Wear suitable protective gloves and protective clothing.

Chemical substances

Injuries can be sustained when using chemical substances.



⚠ WARNING

Risk of chemical burns due to chemical substances

There is a risk of chemical burns when handling aggressive cleaning agents.

Please observe the manufacturer's guidelines on how to handle cleaning agents and solvents. Wear suitable protective equipment (gloves, safety goggles). Please use binding agents to immediately clear up any spilt solvent.

⚠ CAUTION

Risk of injury due to chemically aggressive operating materials

There is a risk of injury to eyes and hands when handling chemically aggressive operating materials.

Please observe the safety instructions in the data sheets of the oil used. Wear suitable protective equipment (gloves, safety goggles). Use an oil-binding agent to immediately clean up spilt oil.

Danger of explosion

An explosion may occur in a potentially explosive atmosphere.



⚠ DANGER

Danger of explosion through ignition of a potentially explosive atmosphere

Danger to life through ignition of a potentially explosive atmosphere possible when operating the gear unit

Do not use the gear unit in potentially explosive atmospheres.

2.6 Intended use

Only use the gear unit according to the conditions specified in the service and delivery contract and the technical data in the Annex (Page 87). Deviating operating conditions are considered improper use. The user or operator of the machine or plant is solely liable for any resulting damage.

When using the gear unit, please specifically observe the following:

- Do not make any modifications to the gear unit which go beyond the permissible handling described in these instructions. This also applies to the guards designed to prevent accidental contact.
- Only ever use original replacement parts.
  Other replacement parts are not tested and approved by Flender. Non-approved replacement parts may possibly change the design characteristics of the gear unit and thus impair its active or passive safety.
  Flender will accept no liability or warranty whatsoever for damage occurring as a result of the use of non-approved replacement parts. The same applies to any accessories which were not supplied by Flender.

If you have any questions, please contact Customer Service (Page 79).

⚠ WARNING

Risk of falling

Risk of serious injury through falling.

Only walk or stand on the gear unit for maintenance and repair work when it is at a standstill. Do not walk or stand on shaft ends, protective covers, mounted components or pipework.

Using the gear unit

When using the gear unit, please observe the following basic rules:

- Ensure that the gear unit is operationally safe.
- The gear unit must only be operated, maintained and repaired by authorised, trained, instructed and qualified personnel.
- The relevant occupational safety and environmental protection provisions must be taken into account in transport, assembly and dismantling, operation, servicing and maintenance.

- Cleaning the outside of the gear unit with a high-pressure cleaning device is not permitted.
- Do not perform any welding work anywhere on the gear unit or connected parts. Do not use the gear unit or connected parts as an earthing point for electric-welding operations. Gear parts and rolling-contact bearings may be irreparably damaged by welding.
- Perform potential equalisation in accordance with the applicable regulations and directives.
  If there are no threaded holes on the gear unit for an earth connection, other suitable measures must be taken. This work must be carried out by specialists in electrical engineering.
- In the case of gear units that are operated in combination with electrical machines that generate current or through which current flows (e.g. motors and generators), take measures to ensure that no current can flow through the gear unit.
  Current flowing through the gear unit can result in irreparable damage to rolling-contact bearings and gears. Short circuits, voltage flashovers and deposits of conductive dust, for example, can all allow current to flow.
  Use insulators and earth the gear unit properly.
- When removing any guards, store their fixings in a safe place.
- Removed guards must be re-fitted prior to starting.
- Observe the notices mounted on the gear unit, e.g. rating plate, direction of rotation arrow symbol, etc. The notices must be kept free from paint or dirt. Replace missing plates.
- Screws which have become unusable during assembly and dismantling must be replaced with new screws of the same strength class and design.

⚠ DANGER

Danger to life when the system is switched on

Death or serious injury will occur.

Always shut down the gear unit and any oil supply system (whether separate or attached to the gear unit) before you perform any work. Secure the drive aggregate against being operated accidentally as follows:

- Turn off the key-operated switch.
- Remove the fuses in the power supply.
- Attach an information notice to the start switch, clearly stating that work is being carried out on the gear unit.
- Ensure that the entire system is not under a load to avoid danger during dismantling work.

Further use of the gear unit

When integrating the gear unit in machines or systems, the machine or system manufacturer is obliged to include the provisions, instructions and descriptions contained in this set of instructions in their instructions.

Description 3

3.1 General description

The FLENDER® helical gear unit (referred to below simply as “gear unit”) described in these instructions has been developed to drive conveyor systems.

The gear unit is available as a single-stage helical gear unit. The gear unit is designed for a horizontal mounting position.

Designs

Various shaft arrangements (versions and directions of rotation) are possible. These are depicted schematically as a solid shaft below. The direction of rotation arrows indicate the dependency of the direction of rotation of the input and output shafts.

Design	Model
	MDSS
G	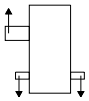
H	
I	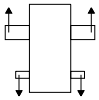

Table 3-1: Designs and associated directions of rotation

NOTICE

Irreparable damage to the gear unit or components if the direction of rotation is wrong

The gear unit can be operated in both directions of rotation.

Depending on the specific contract, the gear unit can be designed for just **one** direction of rotation.

3.2 Housing

Introduction

The housing is made of cast iron.

The housing is a two-part component.

The gear unit housing has the following features:

- Attachment points for moving the gear unit
- Inspection and assembly cover for oil filling and inspection
- Oil sight glass or oil level indicator for checking the oil level
- Oil drain valve with oil drain screw for changing the oil
- Air filter for ventilation and bleeding

More information

Additional information and a detailed illustration of the gear unit can be found in the dimension drawing provided in the complete gear unit documentation.

The grease lubrication points are designated using the following plate:

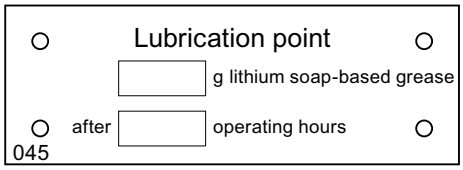

Figure 3-1: Plate: Lubrication point

Gear unit components

The diagram below shows the available gear unit components for a model MDSS gear unit:

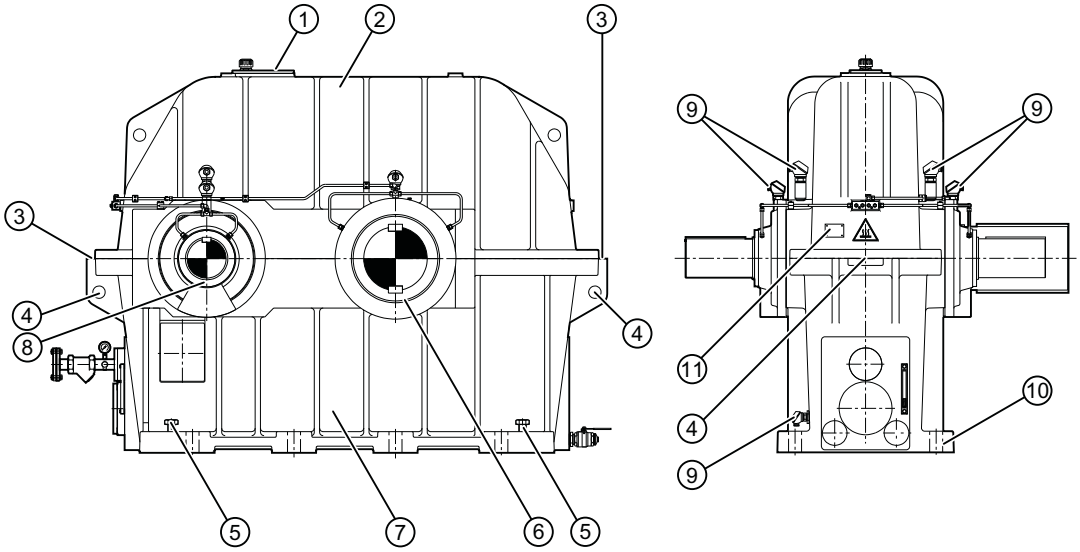

Figure 3-2: Gear unit components on a model MDSS gear unit

① Inspection and/or assembly cover
② Lower housing section
③ Alignment surface
④ Lifting eye
⑤ Alignment screw
⑥ Bearing cover
⑦ Upper housing section
⑧ Bearing cover
⑨ Pt 100 resistance thermometer
⑩ Holes to attach the gear unit fastening
⑪ Rating plate

More information

Additional information and a detailed illustration of the gear unit can be found in the dimension drawing provided in the complete gear unit documentation.

3.3 Oil supply to the gear unit

Introduction

The individual gear unit parts and components are supplied with oil from an oil supply system including tank.

Integrated nozzles supply the gearing and the bearings with oil for lubrication and cooling.

Designs

The following designs are possible:

- Separate oil supply system
- External oil supply system

The pressure of the mounted oil supply system is monitored using a pressure monitor.

Information

All of the monitoring devices must be connected up and be functioning before commissioning.

More information

You can find additional information and a detailed illustrated description of the gear unit and the oil supply system in the dimension drawing in the complete gear unit documentation.

You can find additional information about the oil supply system and control instructions in the separate data sheet, in the list of equipment and in the oil supply system instructions provided in the complete gear unit documentation.

3.4 Bearing arrangement of the shafts

All shafts are mounted on rolling-contact bearings.

3.5 Shaft seal

Introduction

Depending on requirements, shaft seals prevent oil from escaping from the gear unit or dirt from entering the gear unit.

3.5.1 Tacolab seal

Features

Tacolab seals are non-contact, low-maintenance seals that do not wear. It is not therefore necessary to interrupt operation in order to service or replace them.

The Tacolab seal is a combination of two sealing elements:

- Labyrinth seal comprising two labyrinth sealing rings to prevent the escape of lubricating oil
- Grease-filled dust seal (comprising a labyrinth and a lamellar seal) to allow operation of the gear unit in extremely dusty environments

The lubricating nipple is located at the central lubrication point on the face side D_1 of the gear unit (gear unit equipment (Page 24)).

A Tacolab seal is illustrated in the diagram below:

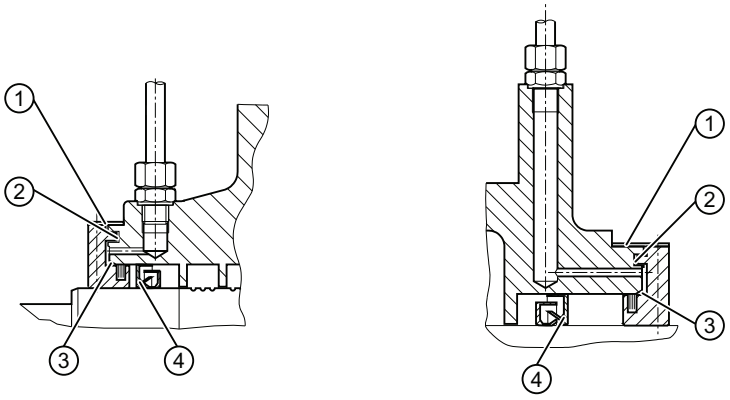

Figure 3-3: Tacolab seal

① Adhesive tape
② Air gap
③ Labyrinth, filled with grease, can be re-greased
④ Labyrinth seal

NOTICE

Sparking, inadmissible temperature rise and shaft seal wear due to insufficient gap dimension

Sparking, inadmissible temperature rise and shaft seal wear possible due to insufficient gap dimension

If the shaft is sealed by Tacolab seals, make sure that the set gap dimension of $1^{+0.5}$ mm at the grease labyrinth is not altered when the input and output elements (e.g. coupling elements) are installed. Rotating and stationary parts must not touch.

For reliable operation, Tacolab seals require a stationary, horizontal installation position without any contact with dirty water - or high dust levels. Overfilling the gear unit can result in leaks, the same applies to oil with a high foam content.

NOTICE
Gear unit leaks caused by poor sealing Gear unit leaks caused by poor sealing are possible. Regrease the labyrinth seals at the specified regreasing intervals. The regreasing intervals are specified in the Maintenance schedule (Page 69).

Further information

Check in the spare parts drawing and the spare parts list as to whether the gear unit is equipped with Tacolab seals.

3.6 Cooling

3.6.1 Separate or external oil supply system

A separately provided or external oil supply system is used to cool the oil.

The pressure of the oil supply system is monitored using a pressure monitor.

When installing the gear unit, make sure that unhindered convection across the housing surface is possible to protect the gear unit against overheating.

For more information, refer to Chapter Lubrication (Page 25).

More information

You can find additional information about separate or external oil supply systems in the instructions for the oil supply system, which are part of the complete documentation of the gear unit.

You can find additional information about the components of the oil supply system in the instructions for the components, which are part of the complete documentation of the gear unit.

You can find additional technical data in the separate data sheet and in the list of equipment, which are part of the complete documentation of the gear unit.

3.7 Couplings

Flexible couplings or safety couplings are generally used to drive the gear unit.

Use of rigid couplings or other input or output elements that generate additional radial or axial forces (e.g. gear wheels, belt pulleys, flywheels or hydraulic couplings) must be agreed contractually.

More information

You can find additional information about the couplings in the coupling instructions provided in the complete gear unit documentation.

3.8 Heating

Introduction

At low temperatures, it may be necessary to preheat the gear unit oil before the drive is switched on or also during operation.

Heating elements

Heating elements can be used for these applications, for example. Heating elements convert electricity into heat and transfer this to the oil in which they are immersed. The heating elements are installed in protective tubes in the housing so that they can be replaced without draining off the oil first.

Complete immersion of the heating elements in the oil bath must be ensured by adhering to the installation position in accordance with the dimension drawings, which are part of the complete documentation, and the oil level.

⚠ WARNING

Fire hazard

Exposed heating elements pose a fire hazard.

Only switch on the heating elements if it is absolutely ensured that they are completely immersed in the oil bath.

If heating elements are retrofitted, the heat output at the outer surface of the heating element must not exceed the maximum values stated in the table below.

The following table contains information about the specific heat output P_{HO} as a function of ambient temperature:

P_{HO} in W/cm^2	Ambient temperature in °C
0.9	10 to 0
0.8	0 to -25
0.7	-25 to -50

Table 3-2: Information about the specific heat output

Control of the heating elements

Heating elements can be controlled by a temperature monitor. The temperature monitor provides a signal to be amplified when the minimum and maximum temperatures are reached.

Information

Install the heating elements in the oil supply system tank.

More information

You can find additional information about the position of the mounted components and a detailed illustration of the gear unit in the dimension drawing in the complete documentation for the gear unit.

Further information about heating elements can be found in the separate data sheet, in the list of equipment and in the heating element instructions in the complete documentation for the gear unit.

You can find additional information about the temperature monitor (such as control instructions) in the temperature monitor instructions in the complete documentation for the gear unit.

3.9 Oil level indicator

The following components can be mounted to the gear unit to visually check the oil level:

- Oil sight glass
- Oil level indicator
- Oil dipstick

Check the oil level when the gear unit is stationary and with the oil in a cool state.

More information

You can find additional information about the oil level indicator and checking the oil in the instructions 7300 in the complete documentation for the gear unit.

More information, a detailed illustration of the gear unit and the position of the mounted components can be found in the dimension drawing in the complete documentation for the gear unit.

3.10 Oil temperature monitoring

Depending on the order specification, the gear unit can be fitted with a Pt 100 resistance thermometer for measuring the oil temperature in the oil sump.

To measure temperatures or temperature differences, connect the Pt 100 resistance thermometer to an evaluation unit (to be supplied by the customer). The resistance thermometer has a connection head for the wiring. A two-wire circuit is provided from the factory, but the customer can also install a three- or four-wire circuit.

The following diagram shows an oil-temperature monitoring system mounted on the gear unit:

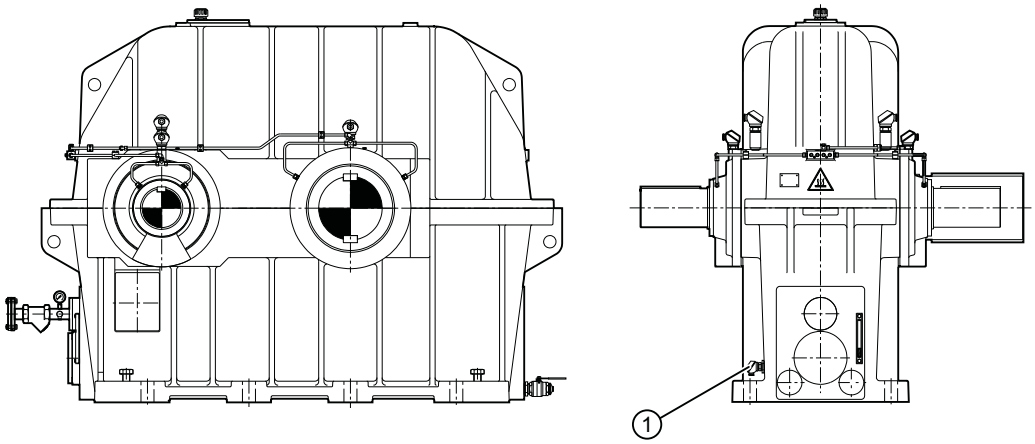

Figure 3-4: Oil-temperature monitoring system for gear units, model MDSS

① Pt 100 resistance thermometer

More information

More information, a detailed illustration of the gear unit and the position of the mounted components can be found in the dimension drawing in the complete documentation for the gear unit.

Additional information about the oil-temperature monitoring system, such as control instructions and the technical data, is provided in the instructions of the oil-temperature monitoring system and in the equipment list in the complete documentation for the gear unit.

3.11 Bearing monitoring

3.11.1 Bearing monitoring using a Pt 100 resistance thermometer

Depending on the order specification, the gear unit can be equipped with Pt 100 resistance thermometers to monitor the bearings.

You must connect the Pt 100 resistance thermometers to an evaluation unit supplied by the customer to be able to measure temperatures or temperature differences. The resistance thermometers have a connection head for the wiring. A two-wire circuit is provided by the manufacturer. However, customers can also configure a three or four-wire circuit.

The following diagram shows bearing monitoring using a Pt 100 resistance thermometer:

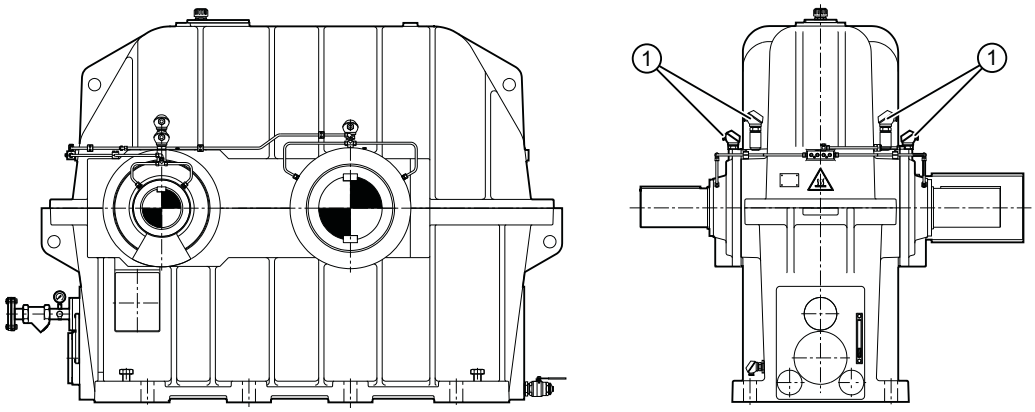

Figure 3-5: Bearing monitoring using a Pt 100 resistance thermometer

① Pt 100 resistance thermometer

More information

More information, a detailed illustration of the gear unit and the position of the mounted components can be found in the dimension drawing in the complete documentation for the gear unit.

You can find additional information about bearing monitoring using a Pt 100 resistance thermometer (such as control instructions) and the technical data in the instructions for the Pt 100 resistance thermometer and in the list of equipment in the complete documentation for the gear unit.

3.11.2 Bearing monitoring by shock-pulse transducer

Depending on the order specification, the gear unit can be equipped with measuring nipples for monitoring the bearings.

These measuring nipples are used to attach shock-pulse transducers through a quick-release coupling; they are located on the housing close to the bearings to be monitored.

More information

More information, a detailed illustration of the gear unit and the position of the mounted components can be found in the dimension drawing in the complete documentation for the gear unit.

3.11.3 Bearing monitoring by acceleration sensor

Depending on the contract, the gear unit can be equipped with threaded holes to attach accelerometers. These threaded holes have an M6 or M8 thread depending on the variant.

The following diagram shows the fully assembled accelerometer (A), and the threaded connection (B) for variants 1 to 4:

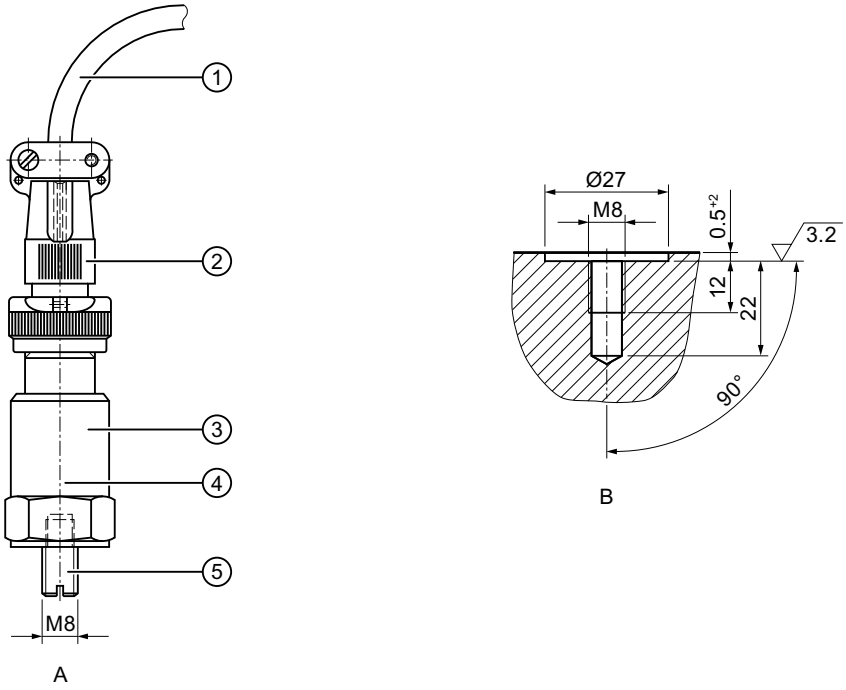

Figure 3-6: Fully assembled accelerometer (A), and threaded connection (B) for variants 1 to 4

① Shielded cable (oil-proof)
② MIL-spec connector
③ Accelerometer
④ Sensitivity specification
⑤ Set screw

The following diagram shows the fully assembled accelerometer (C), and the threaded connection (D) for variants 5A and 5B:

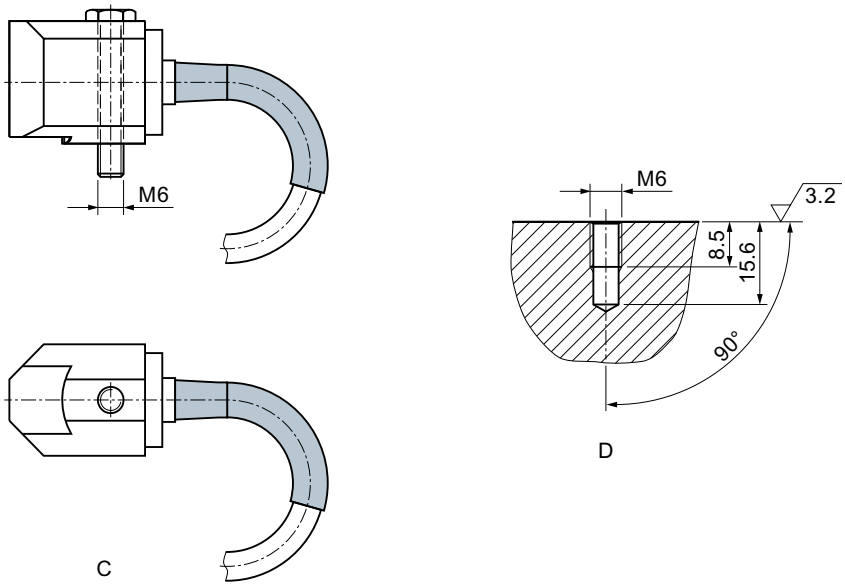

Figure 3-7: Complete accelerometer (C) and threaded connection (D) for variants 5A and 5B

More information

You can find more information and a detailed illustration of the gear unit with attached sensors in the dimension drawing, which is part of the complete documentation of the gear unit.

More information about the sensors can be found in the instructions for the sensors.

Application planning 4

4.1 Scope of delivery

The scope of delivery is listed in the shipping documents. Immediately upon receiving the gearbox, check that everything has been delivered. Report any damaged and/or missing parts to Customer Services (Page 79) immediately.

⚠ WARNING

Serious injury through defective product

Serious injury may occur.

If the gearbox exhibits any visible damage, you should not put it into operation.

4.2 Transport

General information

The gear unit is delivered fully assembled. Additional items such as shrink disks, couplings, oil coolers, pipework and valves may be delivered separately packaged, as necessary.

When transporting the gear unit, observe the following instructions to avoid damaging the gear unit:

- The gear unit may only be transported using suitable means of transport.
- Transport the gear unit emptied of oil and leave the gear unit on the transport packaging.
- Do not use incorrect attachment points.
  The threads in the front shaft ends must not be used for attaching lifting equipment.
- Do not use the pipework for moving the gear unit.
- Ensure that the lifting equipment is able to bear the weight of the gear unit plus a safety margin.



⚠ WARNING

Risk of crushing

There is a danger of being crushed by the component being transported if the hoisting gear and load-bearing equipment used is not suitable and the component comes loose.

When picking up loads, observe the information on load distribution on the packaging.

When transporting the product in a lifted position, proceed slowly and carefully to avoid personal injury and damage to the gear unit.

- Watch for damage while transporting the gear unit.

NOTICE

Damage to gear unit

When transporting the gear unit, the gear unit packaging or coating can be damaged.

When transporting the product in a lifted position, proceed slowly and carefully in order to avoid damage to the packaging or coating.

NOTICE

Damage to gear unit due to impacts against free shaft ends

Damage to gear unit is possible due to impacts against the free shaft ends.

When transporting the product in a lifted position, proceed slowly and carefully.

Avoid impact against the free shaft end.

Attaching the load

For transport, only attach the gear unit at the marked attachment points intended for this purpose.

Ensure the following measures are taken when attaching, lifting, lowering and moving the load:

- Keep within the load limits
- When using loading suspension devices with several load hooks, ensure the load is evenly distributed
- Be aware that the centre of gravity may not be in the centre
- Ensure that lifting equipment is correctly secured
- Move the equipment slowly
- Load sway and attachment of the load to objects or parts of buildings is not permissible
- Load hooks must not be loaded at the tip
- Only set down products on a flat, non-slip and strong base



⚠ DANGER

Falling loads

Danger to life from falling load due to incorrect attachment.

Do not stand under suspended loads. Observe the load limits.

Packaging

The gear unit is delivered fully assembled. Any additional equipment is supplied in separate packaging where applicable.

The way the gear unit is packaged may vary, depending on the transport route and size.

The symbols which appear on the packaging must be observed.

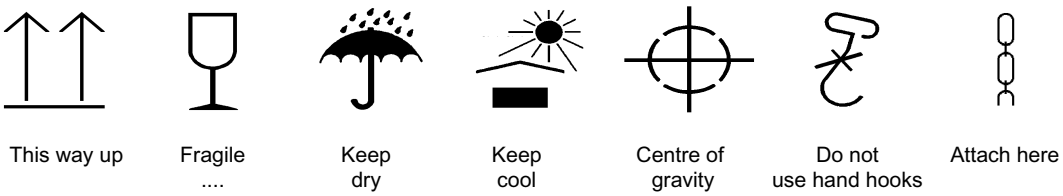

Figure 4-1: Transport symbols

4.3 Attachment points

Lifting eyes

Lifting eyes are fitted to the gear unit to assist with its transportation during manufacture and installation.

Carefully ensure that the angle of the vertical load at the gear units lifting eyes does not exceed 45°.

Position of the attachment points

Attach the gear unit using slings and shackles **only** at the **lifting eyes provided on the lower gear unit section**.

It is not permissible to transport the gear unit using the lifting eyes on the upper section of the gear unit housing. The lifting eyes on the upper section of the gear unit housing are only used to lift the upper housing section.



⚠ DANGER

Falling loads

Danger to life from falling load due to incorrect attachment.

Do not use the lifting eyes at the upper part of the gear unit to lift the complete gear unit.

Attach the gear unit using slings and shackles **only** at the **lifting eyes provided on the lower gear unit section**.

The diagram below shows the position of the attachment points for a gear unit, model MDSS:

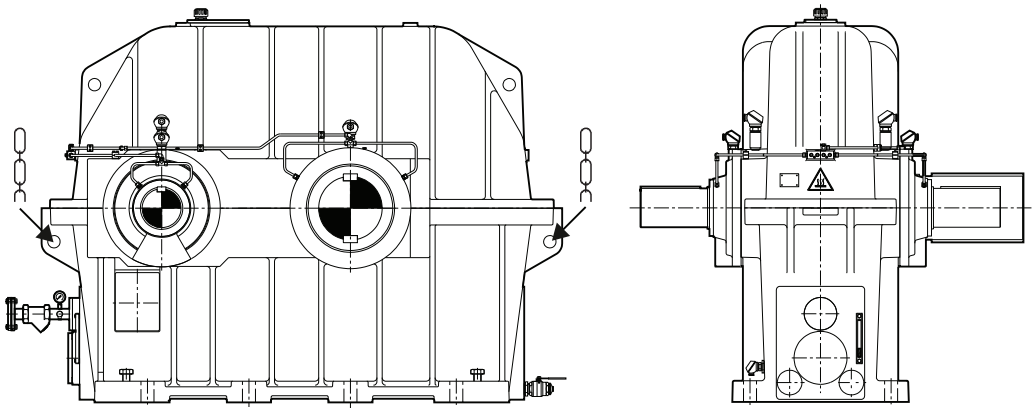

Figure 4-2: Attachment points on a gear unit, model MDSS

Drive units with additional components mounted on the gear unit (such as drive motor, coupling, etc.) may require an extra attachment point owing to the displacement in the centre of gravity caused by the mounted components.

More information

Additional information and a detailed illustration of the gear unit and the position of the attachment points can be found in the dimension drawings in the complete documentation for the gear unit.

4.4 Special aspects of gear unit lubrication and preservation

4.4.1 Oil filling and oil drain

The diagram below shows the oil filling points and the oil draining points on type MDSS gear units:

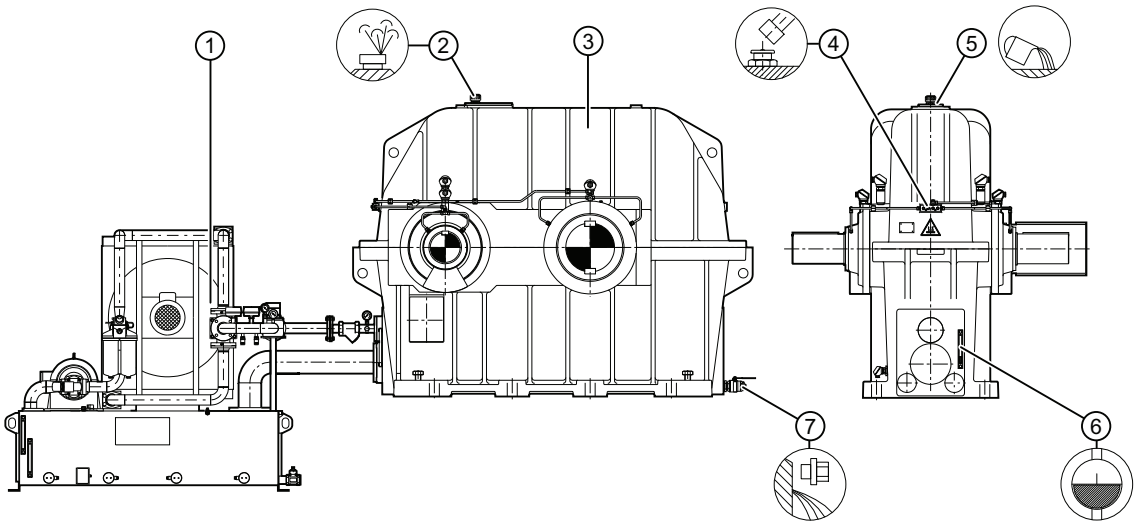

Figure 4-3: Oil filling and draining points on the MDSS type gear unit

① Oil supply system
② Housing ventilation and bleeding
③ Gear unit
④ Lubrication point
⑤ Inspection and/or assembly cover/oil filling
⑥ Oil level indicator
⑦ Oil drain

Further information

Further information and a detailed illustrated description of the gear unit can be found in the dimension drawing in the complete documentation for the gear unit.

4.4.2 Preservation of gear units with Tacolab seals

After gear units with Tacolab seals have been preserved according to the standard procedure, the air gap is hermetically sealed with adhesive tape.

The diagram below shows the procedure for preserving gear units with Tacolab seals:

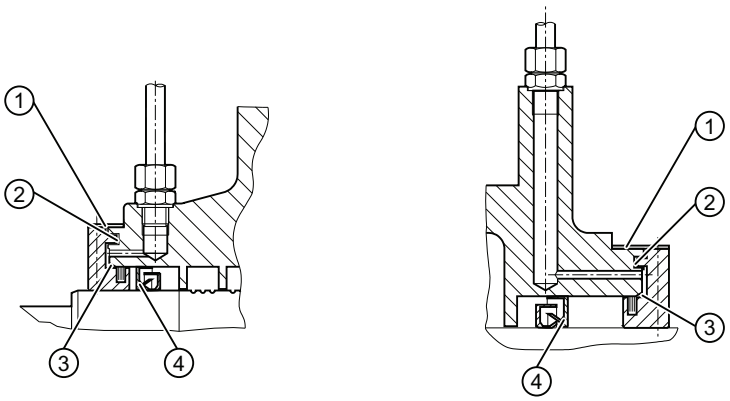

Figure 4-4: Preservation of gear units with Tacolab seals

① Adhesive tape
② Air gap
③ Labyrinth, filled with grease, can be re-greased
④ Labyrinth seal

Do not remove the adhesive tape until you are ready to commission the unit.

Assembly 5

5.1 General assembly instructions

Assembly work must be performed very carefully by authorised, trained and suitably instructed personnel. Liability is excluded for damage caused by the incorrect performance of this work.

Requirements

Improper use can damage the gear unit. Take the following precautions:

- Protect the gear unit against falling objects and from becoming covered over.
- Do not perform any welding work anywhere on the drive.
- Do not use the gear unit as an earthing point for electric-welding operations.
- Use all the fastening points provided in the particular unit design.
- Replace any bolts that can no longer be used with bolts of the same strength class and type.
- Make sure that sufficient hoisting gear is available.

Mounting position and attachment points

During the actual planning phase, be sure to allow for sufficient space around the gear unit to enable subsequent upkeep and maintenance work. Take suitable measures to ensure that unhindered convection across the housing surface is possible so that the gear unit does not overheat. Leave sufficient space to allow a free flow of air into gear units that are equipped with a fan.

The positions of the attachment points are shown in the dimension drawing. To ensure that the unit is properly lubricated during operation, please observe the mounting position specified in the dimension drawings.

NOTICE

Heating of the gearbox by external heat sources

The gear unit must not be heated by external heat sources (exposure to direct sunlight, for example) while it is in operation and measures must be taken where necessary to protect it.

You can take the following measures to protect the gear unit against this hazard:

- A canopy to protect against the sun
- An additional cooling device
- A temperature monitoring device with shutdown function in the oil sump

Hotspots can develop if you use a canopy to provide protection against the sun.

If you use a temperature monitoring device, it must be capable of outputting an alarm when the maximum permissible oil sump temperature is reached. It must also be capable of switching the drive off when the maximum permissible oil sump temperature is exceeded. The operator's process might be interrupted when the drive is shut down.



⚠ WARNING

Ignition of vapours emitted from solvents

There is a risk of injury due to ignition of vapours emitted from solvents during cleaning work.

Please note the following:

- Ensure sufficient ventilation.
- Do not smoke.

5.2 Unpacking the gear unit

Introduction

The scope of delivery is listed in the shipping documents.

⚠ WARNING

Severe injury caused by the content of the packing sliding

There is a risk of being crushed when opening the packing in which the component is transported.

While being transported, the content of the packing can slide.

Carefully open the packing.

Wear suitable protective equipment (gloves, safety glasses).

⚠ WARNING

Severe physical injury due to defective product

A defective gear unit can result in serious injury.

Do not start the gear unit if it is noticeably damaged.

Contact Customer Services (Page 79).

Requirement

Check that everything has been delivered immediately upon receipt.

NOTICE

Damage to gear unit caused by corrosion

Exposing the gear unit to moisture can result in damage from corrosion.

Do not damage or open the packaging too early if the packaging is used to preserve the unit.

Procedure

To unpack and use the gear unit, please proceed as follows:

1. Remove packaging and transport devices in accordance with regulations.
2. Visually inspect for damage and dirt.
3. Report any damaged or missing parts to Customer Service (Page 79) immediately.
4. Dispose of packaging material and transport devices in accordance with regulations.

5.3 Gear unit assembly

5.3.1 Foundation

Properties of the foundation

The foundation must have the following properties:

- Horizontal and level
- Stability
- Designed for torsional rigidity
- Reaction forces from the gear unit must be braced

Requirements of the foundation

The foundation must meet the following requirements:

- Construct the foundation in such a way that it does not generate any resonance vibrations and that it is isolated against the transmission of vibrations from adjacent foundations.
- Design the foundation according to the relevant weight and torque, taking into account the forces acting on the gear unit.
- Align the foundation carefully with the equipment installed on the input and output sides of the gear unit.
  In order to guarantee absolute distortion-free operation for a multi-motor drive, ensure that the motors are absolutely precisely aligned to the gear unit. For distortion-free operation, it is crucial that the motors run in absolute synchronism.
- Take into account any elastic deformation that may be caused by operating forces.
- Install lateral stops to prevent displacement if external forces are acting on the gear unit.

NOTICE
Lack of stable foundation for the gear unit Damage to the gear unit is possible if it is not mounted on a stable foundation. Use bolts of at least strength class 8.8. Information and guidance on the tightening torque can be found in chapter Tightening procedure (Page 58). Tighten the fastening bolts and nuts to the specified tightening torque. When tightening the fastening bolts, make sure that the gear unit is free of mechanical stress.

Further information

Further information about dimensions, space requirements and arrangement of supply connections can be found in the complete documentation for the gear unit.

5.3.2 Description of assembly work



⚠ CAUTION

Risk of chemical burns from chemical substances

There is a risk of chemical burns when handling aggressive cleaning agents.

Please observe the manufacturer's instructions on how to handle cleaning agents and solvents. Wear suitable protective equipment (gloves, safety glasses). Remove any spilled solvent immediately with binding agents.

Improper use can damage the gear unit. Take the following precautions:

- Use a suitable cleaning agent to remove the corrosion protection from the shafts and mounting surfaces.
- Do not allow the cleaning agent to come into contact with the shaft sealing rings.
- Mount the input and output elements (e.g. coupling components) on the shafts and lock them securely. See Chapter Couplings (Page 52).
- Use suitable hoisting gear to place the gear unit in position.

More information

Further information about removing the corrosion protection can be found in the instructions 7300 in the complete documentation for the gear unit.

You can find more information on attaching gear units to lifting equipment in cases where the weight of the gear unit necessitates the use of hoisting gear in Chapter Application planning (Page 35).

If the gear unit is to be transported with mounted parts and components, then it may be necessary to use additional attachment points. You will find the position of these attachment points in the order-specific dimension drawing, which is part of the complete documentation of the gear unit.

Gap dimension at grease labyrinth

The following figure shows the gap dimension at the grease labyrinth:

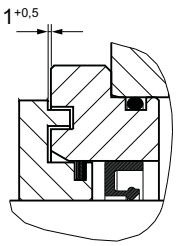

Figure 5-1: Gap dimension at grease labyrinth

NOTICE

Sparking, inadmissible temperature rise and shaft seal wear due to insufficient gap dimension

An insufficient gap dimension can cause sparking, inadmissible temperature rise and shaft seal wear.

If the shaft is sealed by Taconite or Tacolab seals, make sure that the set gap dimension of $1^{+0.5}$ mm at the grease labyrinth is not altered when the input and output elements (e.g. coupling parts) are installed. Rotating and stationary parts must not touch.

5.3.2.1 Alignment

Introduction

The lower section of the gear unit housing has machined surfaces (alignment surfaces) to help you align the unit horizontally in the longitudinal axis. The machine shaft determines the horizontal mounting position in the transverse axis.

⚠ DANGER

Danger to life from flying fragments

Failure to align the unit with the required degree of accuracy can cause the shaft to rupture. A ruptured shaft can result in serious or even fatal injuries.

Align the gear unit exactly so that it conforms to the specified alignment values.

Damage to the gear unit or its components or mounted components is possible.

The accuracy of the alignment between the shaft axes determines the service life of the shafts, bearings and couplings to a large part. Please therefore always endeavour to achieve zero deviation in the alignment of the shaft axes (does not apply to ZAPEX couplings). See also the relevant instructions, for example, for the requirements of couplings.

Procedure

The gear unit can be equipped with alignment threads to make it simpler to align.



Figure 5-2: Alignment surface

Proceed as follows to align the gear unit at the alignment surface:

1. For the precise position of the alignment surfaces and alignment screws, refer to the dimension drawings in the complete documentation.
2. Note the values inscribed in the alignment surfaces.
3. Using these alignment surfaces, horizontally align the gear unit so that perfect gear unit operation is ensured.

The following diagram shows the alignment surfaces and alignment screws for gear units, model MDSS:

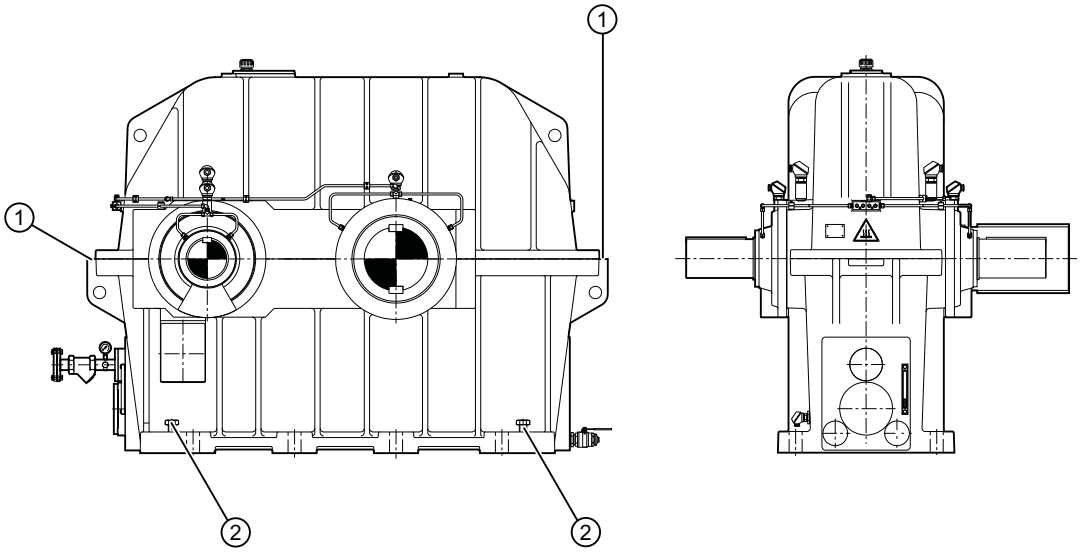

Figure 5-3: Alignment surfaces and alignment screws for gear units, model MDSS

① Alignment surface ② Alignment screw

More information

Further information and the precise position of the alignment thread are provided in the dimension drawing in the overall gear unit documentation.

Tools

Final fine alignment relative to equipment connected at the input and output is performed precisely along the shaft axes using the following tools:

- Rulers
- Spirit level
- Dial gauge
- Feeler gauge etc.

Once the gear unit is finely aligned, tighten the foundation bolts and check the settings again. Document the alignment dimensions in the form of a report, and archive this together with these instructions.

5.3.3 Mounting the gear unit on the housing mounting foot

5.3.3.1 Installation on a foundation frame

Use of incorrect attachment points

Use of incorrect attachment points may result in damage to the gear unit. Attach the gear unit using slings and shackles **only** at the **lifting eyes provided on the lower gear unit section**.

It is not permissible to transport the gear unit using the lifting eyes on the upper section of the gear unit housing. The lifting eyes on the upper section of the gear unit housing are only used to lift the upper housing section.

The threads in the front shaft ends must not be used for attaching lifting equipment for transport. Lifting equipment must be able to bear the weight of the gear unit plus a safety margin.

Requirements

The following requirements must be fulfilled before the assembly work commences:

- The foundation must be horizontal and level.
- The gear unit must not be under tension when the tightening the fastening screws.

NOTICE

Poor stability

Damage to the gear unit is possible if it is not mounted on a stable foundation.

The base frame must be horizontal and level.

It is particularly important that the surface on which the gear unit is mounted is level because this determines the contact pattern of the teeth and the load on the bearings, and so has an influence on the service life of the gear unit.

All points on the gear unit mounting surface must lie between two imaginary parallel planes that are 0.1 mm per 1 m apart.

Procedure

To install the gear unit on a base frame, proceed as follows:

1. Clean the underside of the gear unit feet.
2. Use suitable hoisting gear to set the gear unit down on the base frame.
3. Tighten the foundation bolts to the specified tightening torque (Page 58). If necessary, install stops to prevent displacement.
4. Align the gear unit precisely with the input and output equipment.
5. Record the alignment dimensions.
6. Archive the report together with these instructions.

NOTICE

Damage caused by unevenly tightening the fastening bolts

The gear unit can be damaged by unevenly tightening the fastening bolts.

Evenly tighten the fastening bolts. When tightening the fastening bolts, make sure that the gear unit is free of mechanical stress.

5.3.3.2 Mounting on a concrete foundation using stone bolts or foundation blocks

Requirement

The lower side of the gear unit feet must be clean.

Mounting a gear unit using stone bolts

The following diagram shows a stone bolt:

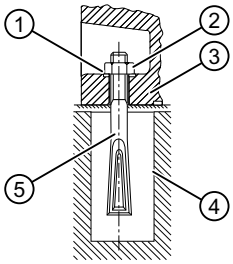

Figure 5-4: Stone bolt

① Washer
② Hexagon nut
③ Gear unit foot
④ Foundation
⑤ Stone bolt

Proceed as follows to mount the gear unit using stone bolts:

1. Attach the stone bolts with washers and hexagon nuts in the foundation mounting points in the gear unit housing.
2. Using a suitable crane or hoisting gear, put the gear unit down on the concrete foundation.
3. Align the gear unit so that the input and output shafts are horizontal using shims.
4. For higher external forces, if necessary, use lateral stops to prevent the gear unit shifting.
5. Pour concrete into the recesses in the concrete foundation for the stone bolts.
6. After the concrete has set, tighten the hexagon nuts of the stone bolts with the specified tightening torque (Page 58).
7. Document the alignment dimensions in the form of a report, and archive this together with these instructions.

NOTICE

Damage caused by unevenly tightening the hexagon nuts

The gear unit can be damaged by unevenly tightening the hexagon nuts.

Evenly tighten the hexagon nuts. Ensure that the gear unit is free of mechanical stress while tightening.

Mounting gear units using foundation blocks

The following diagram shows a foundation block:

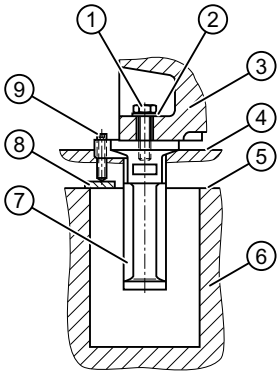

Figure 5-5: Foundation block

① Fastening bolt
② Washer
③ Gear unit foot
④ Height of the completed foundation
⑤ Height of the prepared foundation
⑥ Foundation
⑦ Foundation block
⑧ Flat steel plate
⑨ Set screw

Proceed as follows to mount the gear unit using foundation blocks:

1. Attach the stone bolts or foundation blocks with washers and fastening bolts in the foundation mounting points in the gear unit housing.
2. Tighten the fastening bolts until the housing feet are lying flat on the foundation blocks.
3. Using a suitable crane or hoisting gear, put the gear unit down on the concrete foundation.
4. Align the gear unit so that the input and output shafts are horizontal using the set screws (if available).
5. For higher external forces, if necessary, use lateral stops to prevent the gear unit shifting.
6. Before casting the foundation, close the openings in the foundation blocks using a suitable material (e.g. using polystyrene).
7. Pour concrete into the recesses in the concrete foundation for the foundation blocks.
8. After the concrete has set, tighten the fastening bolts of the foundation blocks with the specified tightening torque (Page 58).
9. Document the alignment dimensions in the form of a report, and archive this together with these instructions.

NOTICE

Damage caused by unevenly tightening the fastening bolts

The gear unit can be damaged by unevenly tightening the fastening bolts.

Evenly tighten the fastening bolts. Ensure that the gear unit is free of mechanical stress while tightening.

5.3.3.3 Mounting on a concrete foundation using anchor bolts

Requirement

The lower side of the gear unit feet must be clean.

Inserting the anchor bolt

The following diagram shows the inserted anchor bolt:

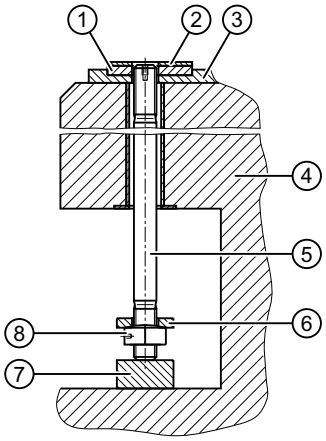

Figure 5-6: Inserted anchor bolt

① Baseplate	⑤ Anchor bolt
② Support	⑥ Pressure plate
③ Fine-grout concrete	⑦ Wood
④ Raw foundation	⑧ Hexagon nut

Proceed as follows to insert the anchor bolt:

1. Place the support on the baseplate embedded in the fine-grout concrete.
2. Insert the anchor bolt.
3. Attach the pressure plate and tighten the nuts.
4. Place a piece of wood under the anchor bolt so that it is set back approximately 10 mm from the upper edge of the support.
5. Place the gear unit down.



⚠ DANGER

Falling loads

Danger to life from falling load due to incorrect attachment.

Do not use the lifting eyes at the upper part of the gear unit to lift the complete gear unit.

Attach the gear unit using slings and shackles **only** at the **lifting eyes provided on the lower gear unit section**.

The threads in the front shaft ends must not be used for attaching lifting equipment for transport.

Lifting equipment must be able to bear the weight of the gear unit plus a safety margin.

Mounting the gear unit using anchor bolts

The following diagram shows a tightened anchor bolt:

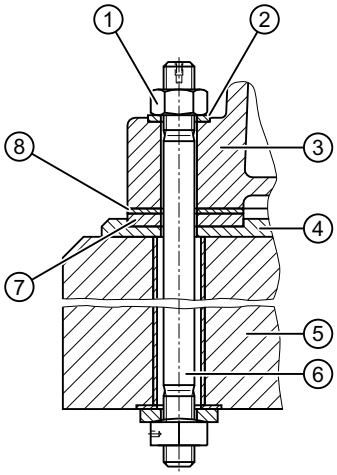

Figure 5-7: Tightened anchor bolt

①	Hexagon nut	⑤	Raw foundation
②	Washer	⑥	Anchor bolt
③	Housing foot	⑦	Baseplate
④	Fine-grout concrete	⑧	Support

Proceed as follows to mount the gear unit using anchor bolts:

1. Pull the anchor bolts upwards. To do this you can screw a bolt or threaded rod into the thread on the face end.
2. Attach the washer.
3. Screw on the hexagon nut by hand a few turns.
4. Align the gear unit with the supports (Page 45).
   - Observe the values inscribed on the alignment strips.
   - Maintain the alignment tolerances to the units connected at the input and output according to the permissible angular and axial displacements of the couplings.
5. Document the alignment dimensions in the form of a report, and archive this together with these instructions.
6. Keep the anchor bolts in their position by tightening the nuts by hand.
7. Fit the protective sleeve.
8. Attach the hydraulic clamping device.
9. Tighten the screws alternating, taking into account the preload forces (Page 58).
10. Tighten the hexagon nuts as far as possible using a suitable tool.
11. Document the tensioning pressures and preload forces, and archive this report together with these instructions.

⚠ CAUTION

Incorrect use of the pre-tensioning device

Incorrectly using the pre-tensioning device can result in injury.

To ensure correct handling and adjustment of the pre-tensioning device, you must carefully comply with the instructions provided by the manufacturer of the pre-tensioning device.

NOTICE

Lack of strength in concrete

Damage caused by inadequate stability of the gear unit as a result of inadequate concrete hardness and strength is possible.

The fine-grout concrete must be allowed to harden for at least 28 days before tensioning the anchor bolts.

5.4 Couplings

Introduction

Improper use can damage the gear unit. Take the following precautions:

- If necessary, perform the following preparatory work in accordance with the coupling instructions:
  - Mill the finished bore
  - Mill the parallel keyway
  - Fit the axial locking element
  - Balance
- Align the individual components precisely with one another.
- Refer to the instructions for the coupling for instructions on how to install, maintain and operate the coupling.

⚠ WARNING

Danger of injury due to coupling rupture

Flying fragments can cause fatal injury.

Observe the coupling instructions.

NOTICE

Serious or irreparable damage to the gear unit and coupling caused by inaccurate or incorrect alignment

Failure to accurately or correctly align the gear unit and coupling may result in serious or irreparable damage to both components.

Align the individual components precisely with one another when installing the drives. Make sure that the maximum permissible misalignment values are not exceeded during operation.

More information

You can find additional information about the coupling in the coupling instructions provided in the complete gear unit documentation.

5.4.1 Assembling the coupling

Introduction

The method used to mount the coupling varies according to model. The procedure described in these instructions is general rather than specific to one type of coupling.

Mount the coupling as described in the instructions for the specific coupling.

Improper use can damage the gear unit. Take the following precautions:

- Do not use force (hammer blows, etc.) to fit the coupling components as this can cause internal damage to the gear unit.
- Take care not to damage the shaft sealing rings or shaft running surfaces when fitting the coupling components.

Procedure

To fit the coupling, proceed as follows:

1. Carefully clean the shaft ends and the coupling parts.
2. Use a suitable fixture to mount the coupling parts on the shaft ends.
3. Lock the coupling parts to prevent axial displacement.
4. Move the machines to be coupled close to one another and then align them (Page 54).
5. Join the coupling parts together.

Heating coupling parts prior to mounting

Depending on the order specification, it may be necessary to heat the coupling parts before mounting them.



⚠ WARNING

Risk of burns

Possible risk of serious burn injury from hot surfaces (> 55 °C).

Wear appropriate protective gloves and protective clothing.

Improper use can damage the gear unit. Take the following precautions:

- The required joining temperatures can be found in the dimension drawings in the instructions for the coupling.
- Unless otherwise instructed, heat the coupling parts by an induction heater, with a torch or in an oven.
- Use heat shields designed to protect against radiant heat in order to safeguard the shaft sealing rings against damage or heating to above 100 °C.

- Quickly fit the coupling parts on the shafts. The mounting dimensions can be found in the dimension drawings in the instructions for the coupling.

Gear units with hollow output shaft or output flange shaft

There is no need to install the output-side coupling for gear units with a hollow output shaft or flanged output shaft.

Mount gear units with hollow output shaft onto the shafts of the customer's driven machine. Use a mating flange to mount gear units with output flange shaft onto the shaft of the customer's driven machine.

More information

You can find additional information about the coupling in the coupling instructions provided in the complete gear unit documentation.

5.4.2 Aligning the coupling

Introduction

The coupling parts might become misaligned as a result of:

- Failure to accurately align the parts during assembly
- During operation of the system:
  - Due to thermal expansion
  - Due to shaft deflection
  - Due to machine frames that are too soft

Improper use can damage the gear unit or the coupling. Take the following precautions:

- Make sure that the maximum permissible misalignment values are not exceeded during operation.
  - If you are using couplings supplied by Flender, you will find the maximum permissible misalignment values in the instructions for the coupling.
  - If you are using couplings supplied by other manufacturers, contact them and ask them for the maximum permissible misalignment values, making sure that you specify the potential radial loads for your application. Keep the instructions for the coupling together with these instructions.
- Angular and radial displacement might occur simultaneously.
  Make sure that the total value of both displacements does not exceed the maximum permissible angular or radial displacement value.

The diagram below illustrates the potential misalignments:

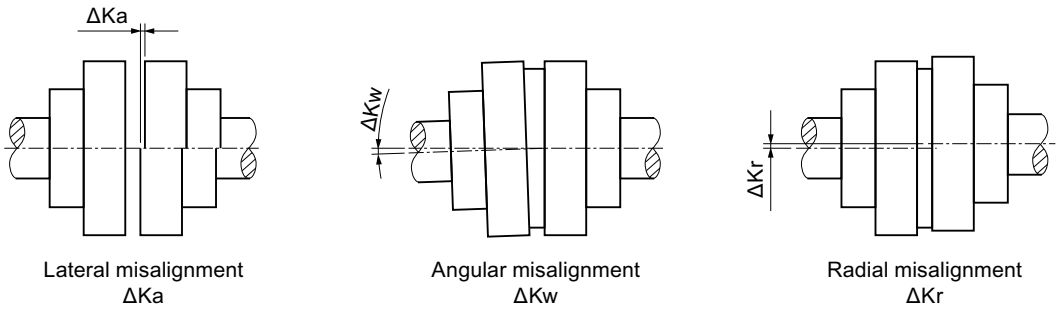

Figure 5-8: Possible misalignments

Alignment

Align the individual components in two mutually perpendicular axial planes. The following can be used as alignment tools:

- Ruler (radial misalignment)
- Feeler gauge (angular misalignment)
- Spirit level
- Dial gauge
- Laser alignment system

You will achieve a greater degree of alignment accuracy by using a dial gauge or laser alignment system.

The diagram below shows the alignment process based on the example of a flexible coupling:

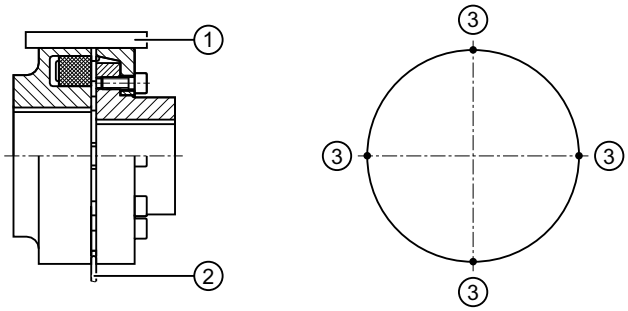

Figure 5-9: Alignment, based on the example of a flexible coupling

① Ruler
② Feeler gauge
③ Measuring points

Information

It is advisable to insert shims or metal sheets under the mounting feet to align the drive components in the vertical direction. It is helpful to use clamping claws with adjusting screws on the foundation to adjust the drive components laterally.

Gear unit with motor bell housing

If the gear unit and the motor are connected through a motor bell housing, no alignment of the couplings is necessary.

More information

You can find more information on the permissible alignment errors in the instructions for the coupling, which are part of the complete documentation of the gear unit, or contact the manufacturer in question.

5.5 Connecting components

5.5.1 Gear units with mounted components

Depending on the order specification, the gear unit can be equipped with various components.

Connect the closed-loop control and open-loop control electrical devices corresponding to the specifications of the device supplier.

More information

You can find additional information on operation and maintenance in the instructions supplied, which are part of the complete documentation of the gear unit.

You will find the technical data of the mounted components in the order-specific list of equipment, which is part of the complete documentation of the gear unit.

5.5.2 Installing a separate oil supply system

Procedure

To connect the oil supply system to the gear unit, proceed as follows:

1. Remove the dummy flange from the suction and delivery line before connecting the system.
2. Mount the system on the gear unit in accordance with the dimension drawings in the complete documentation, or install it as a separate system.
3. Avoid pipe stress during installation.

More information

More information about the oil supply system can be found in the oil supply system instructions contained in the complete documentation for the gear unit.

5.5.3 Connecting the pressure monitor

For gear units with mounted oil supply system or separate oil supply system, you must connect the pressure monitor so that it functions correctly.

More information

You can find additional information on pressure monitoring in the pressure monitor instructions provided in the complete gear unit documentation.

5.5.4 Heating element connection

Procedure

To connect heating elements to the gear unit, proceed as follows:

1. Check that the heating element connection is not damaged.
2. Connect the electric wiring of the heating elements.

More information

You can find additional information about the heating in the heating instructions in the complete documentation for the gear unit.

5.5.5 Connecting the oil temperature monitor

Procedure

To connect the Pt 100 resistance thermometer to the gear unit, proceed as follows:

1. Check that the Pt 100 resistance thermometer connection is not damaged.
2. Install the electrical wiring between the Pt 100 resistance thermometer and the evaluation unit. The customer is responsible for providing the evaluation unit.

More information

You can find additional information on the Pt 100 resistance thermometer in the Pt 100 resistance thermometer instructions, which are part of the complete documentation of the gear unit.

5.5.6 Connecting the bearing monitoring system

Procedure

To connect the Pt 100 resistance thermometer to the gear unit, proceed as follows:

1. Check that the Pt 100 resistance thermometer connection is not damaged.
2. Install the electrical wiring between the Pt 100 resistance thermometer and the evaluation unit. The customer is responsible for providing the evaluation unit.

More information

You can find additional information on the Pt 100 resistance thermometer in the Pt 100 resistance thermometer instructions, which are part of the complete documentation of the gear unit.

5.5.7 Electrical connections

Procedure



⚠ DANGER

Electric shock

Energised parts can cause an electric shock.

Ensure that the entire plant is de-energised before starting electrical installation work. Carefully observe the five safety rules (Page 15).

To connect the motors and monitoring devices, proceed as follows:

1. Ensure that the connections of the motors and monitoring devices are not damaged.
2. Connect the motors and monitoring devices according to the terminal diagram and the relevant operating instructions.
3. Insulate all cable entry points (glands) at electrical equipment as required for the environment in which the equipment will operate.

More information

You can find additional information about the electrical connections in the terminal diagrams and lists of equipment, which are part of the complete documentation of the gear unit.

5.6 Tightening procedure

5.6.1 Introduction

Bolts

The bolts must have the following properties:

- Made of steel
- Black-annealed or phosphatised
- Lightly oiled (do not add additional oil)

Information

Replacing bolts

Replace any bolts that are no longer fit for use by bolts of the same type and strength class.

Mating threads

The mating threads must have the following properties:

- Made of steel or cast iron
- Dry, cut threads

Information

Using a lubricant

As a rule, lubricants may not be used, because this can result in the bolt connection becoming overloaded.

5.6.2 Bolt connection classes

For screwing fastening bolts, note the information in the following table:

Fastening of	Bolt connection class	Range of the torque exerted by the tool	Tightening procedure
Gear unit Motor Brake Torque support	C	± 5% to ± 10%	• Hydraulic tightening with mechanical screwdriver • Torque-controlled tightening with a torque spanner or a signal-emitting torque spanner • Tightening with a precision mechanical screwdriver with dynamic torque measurement
	D	± 10% to ± 20%	• Torque-controlled tightening with mechanical screwdriver
Protective cover Canopy	E	± 20% to ± 50%	• Tightening with an impact wrench or impact driver, without adjustment checking device • Tightening by hand, using a spanner without torque measuring device

Table 5-1: Information on screwing fastening bolts

More information

You can find additional information about tightening torques when mounting the motor and brake in the instructions from the particular manufacturer.

5.6.3 Tightening torques and preload forces

The specified bolt connections must be tightened to the torques stated in the table below.

The tightening torques apply to friction values of μ_{total} = 0.14.

The following table lists the preload forces and tightening torques for bolt connections, strength classes 8.8; 10.9; 12.9:

Nominal thread diameter	Strength class of the bolt	Preload force for bolt connection classes from table in the Chapter "Bolt connection classes" (Page 59)			Tightening torque for bolt connection classes from table in the Chapter "Bolt connection classes" (Page 59)		
d mm		C	D	E	C	D	E
		$F_{M\ min.}$ N			M_A Nm		
M10	8.8	18000	11500	7200	44.6	38.4	34.3
	10.9	26400	16900	10600	65.4	56.4	50.4
	12.9	30900	19800	12400	76.5	66.0	58.9
M12	8.8	26300	16800	10500	76.7	66.1	59.0
	10.9	38600	24700	15400	113	97.1	86.6
	12.9	45100	28900	18100	132	114	101
M16	8.8	49300	31600	19800	186	160	143
	10.9	72500	46400	29000	273	235	210
	12.9	85000	54400	34000	320	276	246
M20	8.8	77000	49200	30800	364	313	280
	10.9	110000	70400	44000	520	450	400
	12.9	129000	82400	51500	609	525	468
M24	8.8	109000	69600	43500	614	530	470
	10.9	155000	99200	62000	875	755	675
	12.9	181000	116000	72500	1020	880	790
M30	8.8	170000	109000	68000	1210	1040	930
	10.9	243000	155000	97000	1720	1480	1330
	12.9	284000	182000	114000	2010	1740	1550
M36	8.8	246000	157000	98300	2080	1790	1600
	10.9	350000	224000	140000	2960	2550	2280
	12.9	409000	262000	164000	3460	2980	2670
M42	8.8	331000	212000	132000	3260	2810	2510
	10.9	471000	301000	188000	4640	4000	3750
	12.9	551000	352000	220000	5430	4680	4180
M48	8.8	421000	269000	168000	4750	4090	3650

Nominal thread diameter	Strength class of the bolt	Preload force for bolt connection classes from table in the Chapter "Bolt connection classes" (Page 59)			Tightening torque for bolt connection classes from table in the Chapter "Bolt connection classes" (Page 59)		
d mm		C	D	E	C	D	E
		$F_{M\ min.}$ N			M_A Nm		
M48	10.9	599000	383000	240000	6760	5820	5200
	12.9	700000	448000	280000	7900	6810	6080
M56	8.8	568000	363000	227000	7430	6400	5710
	10.9	806000	516000	323000	10500	9090	8120
	12.9	944000	604000	378000	12300	10600	9500
M64	8.8	744000	476000	298000	11000	9480	8460
	10.9	1060000	676000	423000	15600	13500	12000
	12.9	1240000	792000	495000	18300	15800	14100
M72x6	8.8	944000	604000	378000	15500	13400	11900
	10.9	1340000	856000	535000	22000	18900	16900
	12.9	1570000	1000000	628000	25800	22200	19800
M80x6	8.8	1190000	760000	475000	21500	18500	16500
	10.9	1690000	1100000	675000	30500	26400	23400
	12.9	1980000	1360000	790000	35700	31400	27400
M90x6	8.8	1510000	968000	605000	30600	26300	23500
	10.9	2150000	1380000	860000	43500	37500	33400
	12.9	2520000	1600000	1010000	51000	43800	39200
M100x6	8.8	1880000	1200000	750000	42100	36200	32300
	10.9	2670000	1710000	1070000	60000	51600	46100
	12.9	3130000	2000000	1250000	70000	60400	53900

Table 5-2: Preload forces and tightening torques

5.7 Final work

Measures

Once all the components have been assembled or connected, perform the following final work:

- Check whether all devices dismantled for transportation have been reassembled.
- Check all bolt connections for tightness after installation of the gear unit has been completed.

- Check the alignment after tightening the fastening elements. The alignment must not have changed in any way.
- Lock the oil drainage valves against accidental opening.
- Protect the gear unit against falling objects.
- Check that the guards over rotating parts are securely fastened.
  Contact (accidental or deliberate) with rotating parts is not permitted.
- Perform potential equalisation in accordance with the applicable regulations and directives. If no threaded holes are available on the gear unit for an earth connection, please take suitable alternative measures. This work must be carried out by specialists in electrical engineering.
- Protect the cable entries against penetrating moisture.

More information

You will find further information on the gear unit and all mounted elements in the instructions for mounted elements, which are part of the complete documentation of the gear unit.

You can find more technical specifications in the separate data sheet in the complete gear unit documentation.

Commissioning 6

6.1 Measures prior to commissioning

Take the following measures before commissioning the gear unit:

- Read and observe the instructions.
- Replace the screw plug with the air filter or the wet-air filter. Note the instructions 7300 for this.
- Fill the gear unit with oil.
- Check the oil level.
- Check the gear unit for leaks.
- Ensure that all pipes and components are filled with oil.

More information

You can find additional information on oil and changing the air filter in the instructions 7300, which are part of the complete documentation of the gear unit.

More information about individual components can be found in the instructions for the components in the complete documentation for the gear unit.

6.1.1 Gear units with oil supply system

Implement the following measures before commissioning the gear unit with oil supply system:

- Ensure that the maximum permissible pressure in the oil supply system components is not exceeded.
- Ensure that the maximum permissible temperature of the oil supply system components is not exceeded.
- Using the oil supply system, lubricate the gear unit for 2 minutes using a pre-lubrication phase. During this time, the rolling-contact bearings and gearing are supplied with sufficient oil for starting.
  Carefully ensure that the pre-lubrication phase is not longer than 5 minutes as the oil can foam up at low temperatures. For oil temperatures below 10 °C, heat up the oil using suitable measures and contact Flender in this regard.

Further information

You can find additional information on the oil cooling system in the separate data sheet, and in the equipment list in the complete gear unit documentation.

6.2 Measures during commissioning

Take the following measures when commissioning the gear unit and document them:

- For gear units with oil supply system: Check that the oil supply system is working properly.
- Check the oil level.
- Measure the oil sump temperature (Page 72) after the gear unit has run in.
- Check the tightness of the shaft seal on the gear unit.
- Check that all rotating parts are free to move.
- Check whether the shutoff valves are open.
  - Check that all of the oil drain valves are closed.
  - Ensure that all of the other shutoff valves are open.
- Check that the connecting pipes are firmly seated and tight.
- For gear units with bearing monitoring based on vibration measurement: Measure the vibration levels of the rolling-contact bearings (Page 72) to create initial and comparison values.
- When commissioning, the pressure monitor signal should be bypassed for approximately 20 seconds. This is necessary as the pressure in the gear unit must first stabilise.

More information

You can find additional information on the topic of oil in the instructions 7300, which are part of the complete documentation of the gear unit.

More information about the oil supply system can be found in the oil supply system instructions contained in the complete documentation for the gear unit.

6.2.1 Running the gear unit for the first time

Requirements

Carry out the following before performing the initial test run:

- Read and observe the instructions.
- Commission the gear unit.

Procedure

Proceed as follows to carry out the initial test run:

1. Limit the period of the no-load operation on the gear unit to a minimum.
2. Monitor the oil level during this period.
   The oil level decreases after being run for the first time. As the gear unit temperature increases, the oil level increases to the height of the mark for the operating oil level.
3. Check the screw connections for oil leaks and reseal them again if necessary.

6.2.2 Heating

Please observe the following measures to commission the gear unit with heating:

- Ensure that the heating elements are not exposed.
- Check the switching points of the temperature monitor.

⚠ WARNING

The oil sump can catch fire

The oil sump can catch fire if exposed heating elements are switched on.

Never switch on the heating elements until you have checked that they are completely immersed in the oil bath.

More information

You can find additional information about heating elements in the heating element instructions in the complete documentation for the gear unit.

Operation 7

7.1 Operating data

Introduction

To ensure correct, trouble-free operation of the system, observe the operating values of the gear unit. The operating value specified in the Appendix “Technical data” apply.

The following operating values apply to the oil:

Maximum operating temperature	80 °C	applicable for mineral oil, API groups I or II, and saturated synthetic ester
	90 °C	applicable for semi-synthetic oils, API group III, PAO and PG oils
Maximum operating temperature (for brief periods)	90 °C	applicable for mineral oil, API groups I or II, and saturated synthetic ester
	100 °C	applicable for semi-synthetic oils, API group III, PAO and PG oils
Oil pressure of the oil supply system	> 0.5 bar	
Water pressure of the cooling coil or the water-oil cooler	< 8.0 bar	

Table 7-1: Operating values

More information

You will find further information about the technical data of the gear unit in the separate data sheet and the list of equipment, which are part of the complete documentation of the gear unit.

7.2 Irregularities in operation

Introduction

Switch off the drive aggregate immediately if it exhibits irregular behaviour during operation.

A few irregularities are listed below as examples:

- Oil temperature exceeds the maximum permissible value
- Alarm tripped by the pressure monitor in the oil cooling system or oil supply system
- Unusual operating noise

NOTICE
Faults can cause damage to the gear unit The gear unit might sustain damage if it is not shut down when a fault occurs. Switch off the drive aggregate immediately if any fault occurs.

Rectifying irregularities in operation

Proceed as follows to rectify any irregularities in operation:

1. Switch off the drive aggregate if it exhibits irregular behaviour during operation
2. Refer to the “Fault information” (Page 74) to find the cause of the fault.
3. If you still cannot determine the cause of the fault, contact Flender Customer Service (Page 79).

7.3 Taking the unit out of service

If you take the unit out of service for a prolonged period, you must take the following measures depending on the length of time that the gear unit will remain out of service:

- Switch off the drive aggregate.
- For gear units with a cooling coil or a water-oil cooler:
  - If there is a risk of frost or the unit is to be taken out of service for a prolonged period, drain the water from the cooling coil or the water-oil cooler and remove residual water with compressed air.
  - Close the shutoff valves for the cooling water inlet and drain lines.
- Start up the gear unit briefly (5 to 10 minutes) at intervals of approximately 3 weeks (if it is taken out of service for up to 6 months).
- Take measures to preserve the gear unit if it is to be out of service for a prolonged period. Follow the procedure described in instructions 7300.
- For gear units with a separate oil supply system or separate oil cooling system, perform the following steps before you preserve the gear unit:
  - Disconnect the gear unit from the separate oil supply system or separate oil cooling system.
  - Seal the openings in the gear unit, separate oil supply system and separate oil cooling system so that they are air-tight.

Servicing 8

8.1 General maintenance information

The operator must ensure compliance with the stipulated time limits. This also applies if the maintenance activities are included in the operator's internal maintenance schedules.

The gear unit could be damaged if the stipulated intervals for maintenance and servicing work are not observed.

The time limits stipulated in the maintenance schedule are largely dependent on the conditions of use of the gear unit. For this reason, it is only possible to state average time limits here. These refer to the following conditions of use:

- Daily operating time 24 h
- Duty cycle "ED" 100%
- Gear unit input speed 1500 rpm
- Permissible average oil temperature (Page 67)



⚠ WARNING

Danger to life when the system is switched on

Working on a gear unit while it is in operation is hazardous and can result in potentially fatal injuries.

Always shut down the gear unit and any oil supply system (whether separate or mounted on the gear unit) before you carry out any work. Take measures to prevent the accidental restarting of the drive aggregate. Attach a notice stating clearly that work is being performed on the gear unit.

8.2 Maintenance schedule

Maintenance and servicing activities

The following table provides an overview of all maintenance and servicing activities which you are required to perform continuously or at regular intervals.

Intervals and time limits	Measures
As required	Replace the wet-air filter Clean the air filter Clean the fan and gear unit
Plate on the gear unit, gear unit dimension drawing	Replace the backstop
Daily	Check the oil temperature Check the oil pressure (if pressure lubrication is fitted) Check for changes in the gear unit noise

Intervals and time limits	Measures
Monthly and prior to every start-up	Check for leaks Check the oil level
400 operating hours after commissioning	Check the water content of the oil Change the oil (or depending on results of the oil sample test) Check that the fastening bolts are tight
Every 3 months	Check the speed monitoring of the auxiliary drive Check the auxiliary drive Clean the oil filter Clean the air filter
Every 3,000 operating hours	Measure the vibration levels of the rolling-contact bearings
Every 3,000 operating hours, at least every 6 months	Regrease Taconite seals Regrease Tacolab seals
Every 5,000 operating hours, at least every 10 months	Replenish grease in the oil retaining pipe
Every 12 months	Check the friction linings of the torque-limiting back-stop Inspect the hose lines Inspect the shrink disk Check the water content of the oil
Every 10,000 operating hours, at least every 2 years	Change the oil if using API Groups I or II mineral oils, or saturated synthetic ester (or depending on the result of oil sample test) Check the condition of the air-oil cooler (the same time as you change the oil) Check the condition of the water-oil cooler (the same time as you change the oil)
Every 2 years	Carry out a general inspection of the gear unit Check the cooling coil Check that the fastening bolts are tight Clean the fan and gear unit
Every 20,000 operating hours, at least every 4 years	Change the oil if using semi-synthetic oil of API Group III, PAO or PG oil (or depending on the result of the oil sampling)
6 years after the stated date of manufacture	Change the hoses

Table 8-1: Maintenance and servicing activities

More information

You can find more information about additional maintenance and servicing activities in the separate data sheet in the overall documentation for the gear unit.

More information about installed components can be found in the instructions for the components in the complete documentation for the gear unit.

8.3 Maintenance and servicing work

Introduction

You can find maintenance and servicing measures relating to gear unit lubrication and preservation, which are not provided in this chapter, in instructions 7300 in the complete documentation for the gear unit.

8.3.1 Cleaning the gear unit

Introduction

Layers of dust may affect the dissipation of heat through the surface of the gear unit, resulting in overheating. Depending on the operating conditions, it may therefore be necessary to clean the gear unit more frequently than stated in the maintenance schedule.

Procedure

To clean the gear unit, proceed as follows:

1. Use a hard brush to remove any stubborn dirt from the gear unit. Never use a high-pressure cleaning device or water.
2. Remove any spots of corrosion.

8.3.2 Cleaning the air filter and replacing the air filter element

8.3.2.1 Cleaning the air filter

Read and observe the instructions 7300.

NOTICE
Damage to the gear unit due to penetration of foreign bodies Damage to the gear unit due to penetration of foreign bodies is possible due to the ambient conditions of the mill. Do not allow foreign matter to enter the gear unit.

8.3.2.2 Replacing the air filter element

Introduction

The paper filter cannot be cleaned.

Procedure

Proceed as follows to replace the air filter element:

1. Remove the air filter cap
2. Replace the filter element.
3. Mount the air filter cap.

8.3.3 Checking the oil temperature

Damage to the gear unit due to excessively high oil sump temperatures

The gear unit can sustain damage due to insufficient lubrication if you allow it to operate at oil sump temperatures above the maximum permissible temperature.

Do not operate the gear unit above the maximum permissible oil sump temperature.

Procedure

Proceed as follows to check the oil temperature:

1. Allow the gear unit to reach its normal operating temperature.
2. Operate the gear unit with the maximum driven machine power.
3. Measure the temperature of the oil in the oil sump.
4. Compare the measured value with the maximum permissible oil temperature (Page 67).
5. Immediately stop the gear unit if the maximum permissible oil temperature is exceeded. Contact Flender Customer Service (Page 79).

8.3.4 Measuring the vibration levels of the rolling-contact bearings

Procedure

Proceed as follows to measure the vibration levels of the rolling-contact bearings:

1. Document the measurement results.
2. Compare the measured values with the comparison values that were documented when commissioning the gear unit.
3. Replace defective rolling-contact bearings.
4. Archive the report together with these instructions.

More information

You can find additional information on measuring the vibration levels at rolling-contact bearings in the instructions of the measurement sensor provided in the complete gear unit documentation.

8.3.5 Measuring the temperature at the rolling-contact bearings

Procedure

Proceed as follows to measure the temperature at the rolling-contact bearings:

1. Measure the temperature at the rolling-contact bearings.
2. Document the measurement results.
3. Compare the measured values with the comparison values that were documented when commissioning the gear unit.
4. Archive the report together with these instructions.
5. Replace defective rolling-contact bearings.

More information

You can find additional information about measuring the temperature at the rolling-contact bearings in the instructions of the Pt 100 resistance thermometer, which are part of the complete documentation of the gear unit.

8.3.6 Check that all of the fastening bolts are tight

Procedure

Proceed as follows to check that the fastening bolts are tight:

1. Observe the data regarding connection classes (Page 59), preload forces and tightening torques (Page 60).
2. Replace any bolts that are no longer fit for use by bolts of the same strength class and type.

8.3.7 General inspection of the gear unit

General inspection of the gear unit by Customer Services

Arrange for Flender Customer Services to perform a general inspection on the gear unit.

Thanks to their experience, these engineers are best placed to assess which gear unit components need to be replaced.

8.3.8 Final work

After you have finished all the work listed in the maintenance schedule, replace any bolts that are no longer fit for use by bolts of the same strength class and type.

8.4 Possible faults

The faults listed below are only intended as a troubleshooting guide.

If any faults occur while the unit is still under warranty, do not allow anyone except Flender Customer Service to attempt a repair.

Even after the warranty period has expired, you should still arrange for faults to be rectified by Flender Customer Service.

Information

Loss of warranty

You will invalidate the warranty for the gear unit if you modify it in any way without seeking the approval of Flender beforehand, or if you do not use original replacement parts.

Only use original replacement parts from Flender. Always arrange for Flender Customer Service to repair any faults that develop while the unit is still under warranty.

Possible faults and how to rectify them

The following table provides an overview of the possible faults and how to rectify them.

Possible faults	Causes	Possible remedies
Pressure monitor triggers an alarm. (For gear units with pressure lubrication or air-oil cooler).	Oil pressure < 0.5 bar	• Check the oil level at room temperature • Top up with oil if necessary • Check the oil pump • If required, replace the oil pump • Check the oil filter and coarse filter • If required, replace the oil filter or clean the coarse filter
Grease escaping at the output shaft	Defective rotary shaft sealing rings	• Inspect the rotary shaft sealing rings and replace if necessary
Noise	Damage to the gears	• Contact Customer Service • Inspect the gear components • If necessary, replace damaged components
	The bearing play is excessive	• Contact Customer Service • Adjust bearing play
	Defective rolling-contact bearings	• Contact Customer Service • Replace defective rolling-contact bearings
	Gear unit fastening has worked loose	• Tighten bolts and nuts to the specified tightening torque • Replace damaged bolts and nuts

Possible faults	Causes	Possible remedies
Outer surface of gear unit soiled with oil	Inadequate sealing of the housing cover or joints	• Seal housing cover or joints
	Labyrinth seals soiled with oil, incorrect transport position	• Check oil filling • Clean the labyrinths
Main drive motor does not start	Motor direction of rotation incorrect	• Change polarity of motor
	Backstop cage with sprags incorrectly installed or defective	• Contact Customer Service • Rotate the backstop cage 180° – or replace
	Overrunning clutch blocked	• Contact Customer Service • Replace the overrunning clutch
	Overrunning clutch cage with sprags incorrectly installed and/or defective.	• Contact Customer Service • Rotate the overrunning clutch cage 180° – or replace
Main drive motor can start while the auxiliary drive is operational	Defective electrical interlocking between the main and auxiliary motor	• Check the connections • If necessary, replace defective devices
	Defective speed monitoring	• Check the connections • If necessary, replace defective devices
Auxiliary drive motor does not start	Overload at the output	• Reduce the load at the output
	Defective auxiliary drive motor	• Repair or replace motor
	Motor brake not released	• Correct the electrical connection of the motor brake • If required, replace the motor brake
The auxiliary drive motor starts, the main gear unit output shaft does not turn	Motor direction of rotation incorrect	• Change polarity of motor
	Overrunning clutch cage with sprags incorrectly installed	• Contact Customer Service • Rotate the overrunning clutch cage 180° – or replace
	Defective overrunning clutch	• Contact Customer Service • Replace the overrunning clutch
Leakage	Inadequate sealing of the housing cover or joints	• Seal housing cover or joints
	Labyrinth seals soiled with oil or incorrect transport position	• Check oil filling • Clean the labyrinths
	Inadequate sealing of the housing cover or joints	• Check the seals • Replace, if necessary • Seal housing cover or joints
	Defective rotary shaft sealing rings	• Check the rotary shaft sealing rings • Replace, if necessary
Oil is foaming in the gear unit	Preservation agent not completely drained off	• Change the oil

Possible faults	Causes	Possible remedies
Oil is foaming in the gear unit	Oil supply system left in operation for too long at low temperatures	• Switch off the oil supply system • Degas the oil
	Gear unit too cold in operation	• Switch off the gear unit • Degas the oil • Start up without cooling water during cold restart
	Water in the oil	• Take test tube sample to examine oil condition for water penetration • Have the oil examined by a chemical lab • Change the oil if necessary
	Oil defoamer has run out	• Examine the oil • Change the oil if necessary
	Unsuitable mixture of oils	• Examine the oil • Change the oil if necessary
Oil escaping from the gear unit	Inadequate sealing of the housing cover or joints	• Check the seals and if required, replace • Seal housing cover or joints • Check the compression seals and retighten screws if necessary
	Leaking pipes	• Check the pipes, and replace or seal if necessary
Oil supply system malfunction	-	• Observe the instructions for the oil supply system
Oil cooling system malfunction	-	• Observe the instructions for the oil cooling system
Elevated temperature during operation	Oil level in the gear unit housing too high	• Check the oil level • If required, correct the oil level
	Oil is too old	• Check when the last oil change was performed • Change the oil if necessary
	Oil is severely contaminated	• Change the oil
	Oil supply system or cooling coil defective	• Check the oil supply system or cooling coil • Replace defective components if necessary • Observe the instructions for the oil supply system
	Gear unit with oil cooling system: Coolant flow too low or too high	• Adjust the valves of the supply and return lines completely • Check the water-oil cooler for free flow
	Gear unit with oil cooling system: The oil flow through the water-oil cooler is too low	• Check the oil filter and coarse filter • If required, replace the oil filter or clean the coarse filter
	Gear unit with cooling coil: Deposits in the cooling coil	• Clean, or if necessary, replace the cooling coil

Possible faults	Causes	Possible remedies
Elevated temperature during operation	For gear units with fan: Air intake opening in air guide cover or gear unit housing is soiled	• Clean the air guide cover and gear unit housing
	Coolant temperature too high	• Check the temperature • Correct the temperature if necessary
	Defective oil pump	• Check the oil pump function • Repair or replace oil pump if required
Elevated temperature at bearing points	Oil level in the gear unit housing too low or too high	• Check the oil level at room temperature • If required, correct the oil level
	Oil is too old	• Check when the last oil change was performed • Change the oil if necessary
	Oil supply system defective	• Check the oil supply system • Replace defective components if necessary • Observe the instructions for the oil supply system
	Defective rolling-contact bearings	• Contact Customer Service • Inspect the rolling-contact bearings and replace if necessary
Increased backstop temperature together with failure of the blocking function	Damaged backstop	• Contact Customer Service • Check the backstop • Replace, if necessary
Increased vibration amplitude at the bearing points	Defective rolling-contact bearings	• Contact Customer Service • Inspect the rolling-contact bearings and replace if necessary
	Gear wheels defective	• Contact Customer Service • Inspect the gear wheels and replace if necessary
Contamination indicator of the double change-over filter triggers an alarm	Double change-over filter clogged	• Change over the double change-over filter as described in the separate instructions • Clean the filter element
Water in the oil	Oil supply system or cooling coil defective	• Check the oil supply system or cooling coil • Replace defective components if necessary • Observe the instructions for the oil supply system
	Machinery compartment fan is blowing cold air onto gear unit: Water condenses	• Install suitable thermal insulation to protect gear unit housing • Close the air outlet or change the direction of the air outlet using structural measures
	Climatic conditions	• Contact Customer Service • Use wet-air filter if necessary

Possible faults	Causes	Possible remedies
Water in the oil	Oil foams in the oil sump	• Take test tube sample to examine oil condition for water penetration • Have the oil examined by a chemical lab

Table 8-2: Possible faults and how to rectify them

Service & Support 9

9.1 Contact

When ordering replacement parts, requesting a customer service technician or if you have any technical queries, contact our factory or one of our Customer Service addresses:

Flender GmbH

Am Industriepark 2

46562 Voerde

Germany

Tel.: +49 (0)2871 / 92-0

Fax: +49 (0)2871 / 92-1544

More information

Further information about service and support can be found on the Internet:

Service & Support (https://www.flender.com/service)

Disposal

10

Disposal of the gear unit

When disposing of the gear unit after its useful life, please observe the following measures:

- Remove operating oil, preservative agents and coolant from the gear unit and dispose of it according to regulations.
- Dispose of the gear unit parts according to applicable national regulations or recycle them.

Environmental protection

Observe the following environmental protection measures for disposal:

- Dispose of or recycle packaging material according to applicable national regulations.
- When changing the oil, collect the used oil in suitable containers. Use oil-binding agents to clean up any oil spillages immediately.
- Store preservative agents separately from used oil.
- Dispose of used oil, preservative agents, oil binding agents and oil-soaked cloths according to the applicable environmental protection regulations.

Spare parts

11

By stocking the most important replacement parts at the installation site, you can ensure that the gear unit is ready to use all the time.

Information

Damage to the gear unit due to use of unsuitable replacement parts

Only use original replacement parts from Flender. Flender shall not accept any warranty claims for replacement parts that are not supplied by Flender.

Other replacement parts are not tested and approved by Flender. Non-approved replacement parts may possibly change the design characteristics of the gear unit and thus impair its active or passive safety.

Flender will accept no liability or warranty whatsoever for damage occurring as a result of the use of non-approved replacement parts. The same applies to any accessories which were not supplied by Flender.

The contact address of Flender Customer Services can be found under Service & Support (Page 79).

Information required when ordering replacement parts

To order replacement parts, refer to the replacement parts list. Use Flender replacement parts only.

When ordering replacement parts, provide the following information:

- Order number with item
- Model and size
- Part number
- Quantity

Declaration of incorporation

A

Declaration of Incorporation

Business name and full address of manufacturer:

Flender GmbH
Am Industriepark 2
46562 Voerde
Germany

Name and address of the person authorised to compile the relevant technical documentation:

Mark Zundel
Flender GmbH
Am Industriepark 2
46562 Voerde
Germany

Description and identification of the partly completed machine:

Helical gear unit for tube mill drives
MDSS
Sizes 1 to 3
to drive machines

The following “Essential Health and Safety Requirements” from – Directive 2006/42/EC Official Journal L 157, 9 June 2006, pages 24-86, Annex I, are applied and are fulfilled:

1.1, 1.1.2, 1.1.3, 1.1.5; 1.2.4.4, 1.2.6; 1.3.1, 1.3.2, 1.3.3, 1.3.4, 1.3.6, 1.3.7, 1.3.8, 1.3.8.1;
1.4.1, 1.5.1, 1.5.2, 1.5.5, 1.5.6, 1.5.7, 1.5.8, 1.5.9, 1.5.10, 1.5.11, 1.5.13, 1.5.15;
1.6.1, 1.6.2; 1.7.1, 1.7.1.1, 1.7.2, 1.7.4, 1.7.4.1, 1.7.4.2, 1.7.4.3

The relevant technical documentation according to Annex VII Part B has been created.

The manufacturer undertakes to send national authorities electronic copies of the relevant technical documentation for the partly completed machine following a reasoned request.

The partly completed machine may only be put into operation if it has been determined, where applicable, that the machine in which the partly completed machine is to be incorporated meets the specifications of the Directive 2006/42/EC.

Representative for issuing this Declaration of Incorporation on behalf of the manufacturer:

Flender GmbH



Voerde, 2022-06-28

Mark Zundel, Vice President, Industrial Gears, Plant Voerde

Translation of the Declaration of Incorporation

Technical data

B

B.1 General technical data

Rating plate

The rating plate of the gear unit contains the most important technical data.

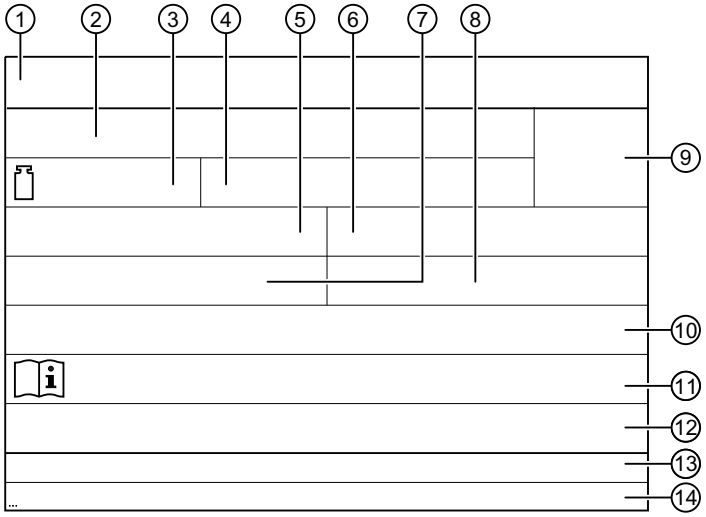

Figure B-1: Rating plate

①	Company logo	⑧	Speed n_2
②	Serial no.: Production plant code / order no.-item ser. no. / year of manufacture	⑨	Optional DMC (Data Matrix Code)
③	Total weight in kg	⑩	Oil data: Oil type, oil viscosity, oil quantity
④	For special information	⑪	Number(s) of instructions, including issue date
⑤	Model, size	⑫	For special information
⑥	Power rating P_2 in kW or torque T_2 in Nm	⑬	Manufacturer documentation / Country of origin
⑦	Speed n_1	⑭	Hotline

The limits of the intended use of the gear unit are defined on the basis of these data and the contractual agreements concerning the gear unit concluded between Flender and the customer.

More information

Further information about these technical data can be found in the separate data sheet and the dimension drawings in the complete documentation for the gear unit.

You can find more information on all important accessories, including their technical data in the list of equipment drawn up specifically for the order, which is part of the complete documentation of the gear unit.

Example code

The following is an example of the code printed in line 5 of the rating plate and explains the meaning of the individual letters and numbers.

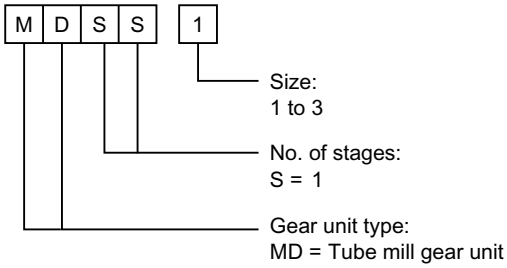

More information

You can find more information on the weights and the enveloping surface sound pressure levels in chapters Weights (Page 88) and Enveloping surface sound pressure level (Page 88).

Further information about these technical data can be found in the separate data sheet and the dimension drawings in the complete documentation for the gear unit.

B.2 Ambient temperature

Unless otherwise contractually agreed, the gear unit must not be exposed to any harmful atmospheres or substances such as aggressive chemical products. By applying various suitable measures, the gear unit can be used in the ambient temperature range extending from -40 °C up to 60 °C. However, this must always be authorised by Flender and specified in the order text.

B.3 Weights

The precise weights are specified in the dimension drawings in the complete documentation or on the rating plate.

All weight specifications refer to units without oil filling or mounted components.

B.4 Enveloping surface sound pressure level

The gear unit complies with a sound power level, which places it in a gear unit type class defined in VDI 2159, which is applied to produce the 80 % characteristic curve of the emission characteristic map.

Adherence to limit values can, under specified Flender test conditions, be assumed with statistical certainty.

Data on the enveloping surface sound pressure level are only possible for these gear units in specific cases.

Index

A

Air filter, 71
Air filter element, 72
Alignment
  Alignment surface, 45
  Prealignment, 45
Attachment points, 41

B

Bearing monitoring
  Accelerometer, 31
  Resistance thermometer, 30
  Shock-pulse transducer, 31
  Structure, 31

C

Check that the
  fastening bolts are tight, 73
Coloured markings, 16
Copyright, 13
Coupling, 27
  Alignment, 54
  Mounting, 53

D

Danger of explosion, 20
Directions of rotation, 23
Disposal, 81
Documentation landscape, 13

E

Environmental protection, 81
Equipment features, 23

F

Fastening bolts
  Bolt connection class, 59
  Bolts, 58
  Mating threads, 59
  Preload force, 60
  Tightening procedure, 59
  Tightening torque, 60
Fault, 74
Fault rectification, 74
Fault-finding, 74
Final work, 61

G

Gear unit components, 24
Gear unit designs, 23
Gear unit housing, 23
Gear unit markings, 16
Gear unit use, 20
General inspection of the gear unit, 73
Grease lubrication point, 24

H

Heating
  Commissioning, 64
  Function, 28
  Heating element connection, 57
  Heating elements, 28
  Temperature monitor, 28

I

Initial test run, 64
Integration note, 21
Interval, 69
Irregularities in operation, 67

L

Liability disclaimer, 12
Lubricant, 14

M

Maintenance, 69
Maintenance information, 69
Maintenance schedule, 69
Measures
  during commissioning, 63
  Prior to commissioning, 63
Mounting position, 41

N

Notes regarding assembly, 41

O

Oil, 14
Oil level indicator, 29
Oil supply, 25
Oil supply system, 25, 27
  Commissioning, 63
Oil temperature
  Checking, 72
Oil-temperature monitoring system
  Connecting the resistance thermometer, 57
  Resistance thermometer, 29
  Structure, 30
Operating values, 67
  Oil, 67
Ordering replacement parts, 83

P

Pressure monitor, 27
Pressure monitoring, 27
Protective equipment, 18

R

Rating plate, 87
  Example of model and size, 88
Rolling-contact bearings
  Measure temperature, 73
  Measuring the vibration levels, 72

S

Safety rules, 15
Scope of delivery, 35
Servicing activities, 69
Shaft bearings, 25
Shaft seal, 25
Shipping documents, 35

T

Tacolab seal, 26
Taking out of service, 68
Technical specifications, 87
Transport note, 35
Transport symbol, 36
Types of danger, 17

U

Unpacking, 42
Used oil, 81

W

Warning symbols, 17

FLENDER GEAR UNITS

Helical gear unit for drive systems for tubular mills
Assembly and operating instructions A9111-01en
Edition 06/2022

Flender GmbH
Alfred-Flender-Straße 77
46395 Bocholt
Germany

FLENDER