FLENDER GEAR UNITS

Vertical-mill gear unit

Assembly and operating instructions 9180en
Edition 06/2020

KMP 180...475, KMPS 376...656, KMPP 501...901

flender.com

FLENDER

FLENDER

FLENDER GEAR UNITS

Vertical-mill gear unit 9180en

Assembly and operating instructions

KMP 180...475, KMPS 376...656, KMPP 501...901

Introduction 1

Safety instructions 2

Description 3

Application planning 4

Assembly 5

Commissioning 6

Operation 7

Servicing 8

Service & Support 9

Disposal 10

Spare parts 11

Technical data A

Original assembly and operating instructions
Edition 06/2020

Legal information

Warning notice system

This manual contains notices you have to observe in order to ensure your personal safety, as well as to prevent damage to property. The notices referring to your personal safety are highlighted in the manual by a safety alert symbol, notices referring only to property damage have no safety alert symbol. These notices shown below are graded according to the degree of danger.

⚠ **DANGER**
indicates that death or severe personal injury **will** result if proper precautions are not taken.

⚠ **WARNING**
indicates that death or severe personal injury **may** result if proper precautions are not taken.

⚠ **CAUTION**
indicates that minor personal injury can result if proper precautions are not taken.

NOTICE
indicates that property damage can result if proper precautions are not taken.

If more than one degree of danger is present, the warning notice representing the highest degree of danger will be used. A notice warning of injury to persons with a safety alert symbol may also include a warning relating to property damage.

Qualified Personnel

The product/system described in this documentation may be operated only by **personnel qualified** for the specific task in accordance with the relevant documentation, in particular its warning notices and safety instructions. Qualified personnel are those who, based on their training and experience, are capable of identifying risks and avoiding potential hazards when working with these products/systems.

Proper use of Flender products

Note the following:

⚠ **WARNING**
Flender products may only be used for the applications described in the catalog and in the relevant technical documentation. If products and components from other manufacturers are used, these must be recommended or approved by Flender. Proper transport, storage, installation, assembly, commissioning, operation and maintenance are required to ensure that the products operate safely and without any problems. The permissible ambient conditions must be complied with. The information in the relevant documentation must be observed.

Trademarks

All names identified by ® are registered trademarks of Flender GmbH. The remaining trademarks in this publication may be trademarks whose use by third parties for their own purposes could violate the rights of the owner.

Disclaimer of Liability

We have reviewed the contents of this publication to ensure consistency with the hardware and software described. Since variance cannot be precluded entirely, we cannot guarantee full consistency. However, the information in this publication is reviewed regularly and any necessary corrections are included in subsequent editions.

Flender GmbH
Alfred-Flender-Straße 77
46395 BOCHOLT
GERMANY

Document order number: 9180en
Ⓟ 12/2020 Subject to change

Copyright © Flender GmbH 2020.
All rights reserved

Table of contents

1 Introduction 9

1.1 General information 9

1.2 Lubricants 10

2 Safety instructions 11

2.1 Security notes 11

2.2 The five safety rules 11

2.3 General information 12

2.4 General warnings and symbols 13

2.5 Special types of danger and personal protective equipment 14

2.6 Intended use 16

3 Description 19

3.1 General description 19

3.2 Housing 19

3.3 Delivered state of the gear unit 21

3.4 Oil supply to the gear unit 21

3.4.1 Hydrodynamic lubrication of tilting pad thrust bearings 22

3.4.2 Hydrodynamic lubrication of tilting pad thrust bearings on gear units with hydrostatic starting aid 22

3.4.3 Hydrostatic lubrication of tilting pad thrust bearings with radial piston pump 22

3.5 Shaft seals 23

3.5.1 Labyrinth seals 23

3.6 Couplings 24

3.7 Heating 24

3.8 Oil level indicator 25

3.9 Oil temperature monitoring 26

4 Application planning 27

4.1 Scope of delivery 27

4.2 Transport 27

4.3 Attachment points 29

4.4 Special aspects of gear unit lubrication and preservation 31

4.4.1 Oil filling and oil drain 31

4.4.2 Filling with oil 31

4.4.3 Draining oil 32

4.4.4 Checking the oil level 33

4.4.5 Taking oil samples ... 33
4.4.6 Preservation ... 33
4.4.6.1 Special aspects of extending the durability of the interior preservation ... 34
4.4.6.2 Sealing cap ... 35
4.4.6.3 Extending the durability of the interior preservation by operating the oil supply system ... 36

5 Assembly ... 39

5.1 General assembly instructions ... 39

5.2 Unpacking the gear unit ... 40

5.3 Gear unit assembly ... 41
5.3.1 Foundation ... 41
5.3.2 Description of assembly work ... 43

5.4 Couplings ... 45
5.4.1 Assembling the coupling ... 45
5.4.2 Aligning the coupling ... 47

5.5 Mounting the pipes ... 48
5.5.1 Procedure ... 48
5.5.2 Pickling after adaptation ... 49

5.6 Installing the motor ... 50

5.7 Welding work on the mill ... 51

5.8 Connecting components ... 51
5.8.1 Installing further mounted components supplied as separate items ... 51
5.8.2 Making terminal box connections for pre-wired gear units ... 52
5.8.3 Gear units with mounted components ... 52
5.8.4 Installing a separate oil supply system ... 53
5.8.5 Electrical connections ... 53

5.9 Tightening procedure ... 54
5.9.1 Introduction ... 54
5.9.2 Bolt connection classes ... 55
5.9.3 Tightening torques and preload forces ... 55

5.10 Final work ... 57

6 Commissioning ... 59

6.1 Measures prior to commissioning ... 59
6.1.1 Rinsing before first commissioning ... 60
6.1.2 Gear unit with oil supply system ... 60
6.1.3 Checking procedure ... 60

6.2 Measures during commissioning ... 62
6.2.1 Initial test run ... 62
6.2.2 Gear units with heating ... 63

7 Operation ... 65

7.1 Operating data ... 65

7.2 Irregularities in operation ... 65

7.3 Taking the unit out of service ... 66

8 Servicing ... 69

8.1 General maintenance information ... 69

8.2 Maintenance schedule ... 69

8.3 Maintenance and servicing work ... 70
8.3.1 Contamination limits ... 71
8.3.2 Servicing ... 71
8.3.3 Checking the oil temperature ... 72
8.3.4 Measuring the vibration levels ... 72
8.3.5 Cleaning the gear unit ... 74
8.3.6 Cleaning the air filter and replacing the air filter element ... 74
8.3.6.1 Cleaning the air filter ... 74
8.3.6.2 Replacing the air filter element ... 74
8.3.7 Cleaning the double change-over filter ... 75
8.3.8 Welding work on the mill ... 75
8.3.9 General inspection of the gear unit ... 75
8.3.10 Check that all of the fastening bolts are tight ... 76
8.3.11 Final work ... 76

8.4 Possible faults ... 76

9 Service & Support ... 81

10 Disposal ... 83

11 Spare parts ... 85

A Technical data ... 87

A.1 General technical data ... 87

A.2 Ambient temperature ... 89

A.3 Weights ... 89

A.4 Enveloping surface sound pressure level ... 89

Index ... 91

Tables

Table 2-1 Symbols and markings ... 12
Table 2-2 General warnings ... 13
Table 3-1 Information about the specific heat output ... 25
Table 5-1 Information on tightening fastening bolts ... 55
Table 5-2 Preload forces and tightening torques ... 56
Table 8-1 Maintenance and servicing activities ... 69
Table 8-2 Possible faults and their rectification ... 77

Figures

Figure 3-1 Gear unit preservation equipment ... 20

Figure 3-2 Arrangement of round cord hollow profile and rotary shaft sealing ring 21
Figure 3-3 Labyrinth seal 23
Figure 4-1 Transport symbols 29
Figure 4-2 Position of the attachment points on a type KMP gear unit 29
Figure 4-3 Position of alternative attachment points on a type KMP gear unit 30
Figure 4-4 Oil filling locations and oil drain locations 31
Figure 5-1 Possible displacements 47
Figure 5-2 Alignment process based on the example of a flexible coupling 48
Figure 8-1 Measuring points for vibration measurements 72
Figure A-1 Rating plate 87

Introduction 1

1.1 General information

Purpose of the operating instructions

These operating instructions describe the gear unit and provide information about handling it - from assembly to maintenance.

Please keep these operating instructions for later use. Please read these operating instructions prior to handling the gear unit and follow the information in them.

Note

Disclaimer

Please make sure that every person who is commissioned to work on the gear unit has read and understood these operating instructions prior to handling the gear unit and adheres to all of the points. Failure to observe these operating instructions can cause product or property damage or personal injury.

Flender does not accept any liability for damage or operating failures that are due to non-adherence to these operating instructions.

The gear unit described in these instructions reflects the state of technical development at the time these operating instructions went to print.

In the interest of technical advancements, Flender reserves the right to make changes to the individual components and accessories which are considered necessary for improving their performance and safety, while maintaining their essential features.

Basic knowledge required

In order to understand these operating instructions, you will need the following general knowledge about gear units. You will also need a basic understanding of the following topics:

- Application planning
- Assembly
- Commissioning
- Maintenance

Documentation landscape

These operating instructions form part of the delivery of your gear unit.

These operating instructions form part of the complete documentation supplied with the gear unit. The complete documentation encompasses other documents, including:

- Data sheet
- List of equipment
- Dimension drawing
- Operating instructions for gear unit lubrication and preservation BA 7300
- Operating instructions for mounted components
- Operating instructions for third-party vendor devices

Copyright

The copyright for these operating instructions is held by Flender.

Without the authorisation of Flender, these operating instructions may not be used wholly or in parts for competitors' purposes or be given to third parties.

If you have any technical queries, please contact one of our Customer Services addresses (Page 81).

1.2 Lubricants

The quality of the oil used must meet the requirements of the operating instructions BA 7300 that is provided as a separate item, otherwise the warranty provided by Flender will be void. Flender urgently recommends that one of the oil types listed in BA 7300, which have been appropriately tested and comply with the requirements, is used.

To avoid misunderstandings, Flender points out that, by making this recommendation, it is not approving the product in the sense of expressing a warranty for the quality of the lubricants supplied by your supplier. Each lubricant manufacturer must provide a warranty for the quality of its own product.

You will find the oil grade, oil viscosity and the required oil quantity on the rating plate of the gear unit and in the documentation provided with it.

The oil quantity specified on the rating plate is an approximate quantity. The decisive factors for the oil quantity to be filled are the marking of the oil dipstick or oil sight glass.

The operating instructions for the current lubricant recommendations of Flender can also be viewed in the Internet (https://www.flender.com/lubricants).

The oils listed there undergo continuous testing. For this reason, oils recommended there may be removed later or replaced with further developed oils.

Flender recommends regular inspection to ascertain whether the selected lubricating oil is still approved by Flender. If it is not, a different make should be used instead.

Safety instructions 2

2.1 Security notes

Flender offers products and solutions with industrial security functions, which support the safe and secure operation of plants, systems, machines and networks.

In order to safeguard plants, systems, machines and networks against cyber threats it is necessary to implement (and continually maintain) a holistic industrial security concept that corresponds to the current state of the art. Flender products and solutions undergo continuous development in this respect.

Customers are responsible for preventing unauthorised access to their plants, systems, machines and networks. These systems, machines and components shall be connected to the company network or the Internet only when and to the extent that this is absolutely necessary and appropriate protective measures (e.g. firewalls and/or network segmentation) shall be taken.

You can find further information about possible protection measures as part of Industrial Security in the following international series of standards, for example: IEC 62443 "Network and system security".

Flender products and solutions undergo continuous development in order to make them even safer. Flender strongly recommends that you regularly implement product updates as soon as they become available and that you only use the current product versions. Use of older or no longer supported versions can increase the risk of cyber threats.

2.2 The five safety rules

In order to protect yourself and prevent any damage to property, always observe the safety relevant information and the following five safety rules (as per EN 50110-1 "Working on isolated equipment") when working on electrical components of the plant.

Prior to starting work on the machine, follow the safety rules listed below:

1. Disconnect
   Also disconnect auxiliary circuits such as the anti-condensation heater
2. Safeguard against restart
3. Ensure that the system is de-energised
4. Earth and short circuit
5. Cover or cordon off adjacent live parts

When all the work is complete, cancel the safety measures in the reverse sequence.

2.3 General information

Introduction

All work on the gear unit should be performed with care and only by qualified personnel.

Symbols on the gear unit

The following symbols apply to the gear unit; some of which are found as coloured markings on the gear unit:

Table 2-1 Symbols and markings

Points labelled on the gear unit	Symbol	Coloured markings
Earth connection point		
Air relief point		yellow
Oil filling point		yellow
Oil draining point		white
Oil level indicator		red
Oil level measurement		red
Oil overflow		
Connection point for vibration monitoring		
Lubrication point		red
Apply grease		
Lifting eye		
Eye bolt		

Points labelled on the gear unit	Symbol	Coloured markings
Do not unscrew		
Alignment surface, horizontal		
Alignment surface, vertical		
These symbols indicate the oil level checking procedure using the oil dipstick.	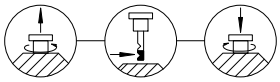	
These symbols indicate that the oil dipstick must be firmly screwed in.	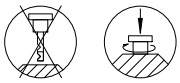	

2.4 General warnings and symbols

The following table contains general warnings and their associated symbols.

Table 2-2 General warnings

ISO	ANSI	Warning
		Warning - hazardous electrical voltage
		Warning - explosive substances
	---	Warning - entanglement hazard
	---	Warning - hot surfaces
	---	Warning - substances that can irritate or which are hazardous to health
	---	Warning - caustic substances
	---	Warning - suspended load
	---	Warning - hand injuries
		ATEX certification

2.5 Special types of danger and personal protective equipment

Requirements

Fulfil the following requirements before commencing work on the gear unit:

- Ensure that the oil pressure lines are depressurised.
- Only perform work on the gear unit when it is not in operation.
- Disconnect electrical systems from the power supply.



⚠ DANGER

Electric shock

Live parts can cause electric shock.

Ensure that the entire plant is de-energised before starting electrical installation work.

Protective equipment

Wear the following personal protective equipment when handling the gear unit:

- Safety shoes
- Overalls
- Helmet
- Safety gloves
- Safety goggles

⚠ WARNING

Risk of eye injury

Small foreign particles such as sand or dust can enter the cover plates of the rotating parts and be hurled back by them.

Wear safety goggles.

Dangers during operation

Damage to the gear unit is possible.

Switch the gear unit to standstill immediately if inexplicable changes are noticed during operation. Such changes may include unusual gear unit noise or a significant increase in operating temperature.

⚠ WARNING

Risk of falling

There is an increased risk of falling when standing or walking on the gear unit during operation.

Only walk or stand on the gear unit and its mounted components for maintenance and repair work when it is at a standstill. Do not walk or stand on shaft ends, protection covers, mounted components or pipes.



⚠ WARNING

Danger to life through rotating or moving parts

There is danger that rotating or moving parts may catch hold of you or pull you in.

Secure rotating and/or moving parts against contact using safeguards.

Surface temperature

The surface temperatures of the gear unit can become very extreme depending on the operating conditions.



⚠ WARNING

Risk of burns

Possible risk of serious burn injury from hot surfaces (> 55 °C).

Wear suitable protective gloves and protective clothing.

⚠ WARNING

Risk of scalding

Risk of serious injury possible through escaping hot operating media when these are being changed.

Wear suitable protective gloves, safety goggles and protective clothing.

⚠ WARNING

Danger due to low temperatures

Possible risk of serious injuries due to frost (pain, numbness, frostbite) on cold surfaces (< 0 °C).

Wear suitable protective gloves and protective clothing.

Chemical substances

Injuries can be sustained when using chemical substances.



⚠ WARNING

Risk of chemical burns due to chemical substances

There is a risk of chemical burns when handling aggressive cleaning agents.

Please observe the manufacturer's guidelines on how to handle cleaning agents and solvents. Wear suitable protective equipment (gloves, safety goggles). Please use binding agents to immediately clear up any spilt solvent.



⚠ CAUTION

Risk of injury due to chemically aggressive operating materials

There is a risk of injury to eyes and hands when handling chemically aggressive operating materials.

Please observe the safety instructions in the data sheets of the oil used. Wear suitable protective equipment (gloves, safety goggles). Use an oil-binding agent to immediately clean up spilt oil.

Danger of explosion

An explosion may occur in a potentially explosive atmosphere.



⚠ DANGER

Danger of explosion through ignition of a potentially explosive atmosphere

Danger to life through ignition of a potentially explosive atmosphere possible when operating the gear unit

Do not use the gear unit in potentially explosive atmospheres.

2.6 Intended use

Only use the gear unit according to the conditions specified in the service and delivery contract and the technical data in the annex (Page 87). Deviating operating conditions are considered improper use. The user or owner of the machine or plant is solely liable for any resulting damage.

When using the gear unit please specifically observe the following:

- Do not make any modifications to the gear unit which go beyond the permissible handling described in these operating instructions. This also applies to safety features designed to prevent accidental contact.
- Only ever use original spare parts.
  Other spare parts are not tested and approved by Flender. Non-approved spare parts may possibly change the design characteristics of the gear unit and thus impair its active or passive safety.
  Flender will accept no liability or warranty whatsoever for damage occurring as a result of the use of non-approved spare parts. The same applies to any accessories which were not supplied by Flender.

If you have any queries, please contact Customer Services (Page 81).

⚠ WARNING

Risk of falling

Risk of possible serious injury through falling.

Only walk or stand on the gear unit for maintenance and repair work when it is at a standstill. Do not walk or stand on shaft ends, protection covers, mounted components or pipes.

Gear unit use

When using the gear unit, please observe the following basic rules:

- Ensure that the gear unit is operationally safe.
- The gear unit should only be operated, maintained or repaired by authorised, trained and suitably qualified personnel.
- The relevant work safety and environmental protection regulations must be complied with at all times during transport, assembly, dismantling, operation, maintenance and servicing.
- The outside of the gear unit must not be cleaned using high-pressure cleaning equipment or water.
- No welding work must be performed on the gear unit or on parts connected to it. The gear unit and any parts connected to it must not be used as an earthing point for electric-welding operations. Gearing and rolling-contact bearings might be irreparably damaged by welding.
- Perform potential equalisation in accordance with the applicable regulations and guidelines. If no threaded holes are available on the gear unit for an earth connection, please take suitable measures. This work must always be done by specialist electricians.
- In the case of gear units that are operated in combination with electrical machines that generate current or through which current flows (e.g. motors and generators), take measures to ensure that no current can flow through the gear unit.
  Current flowing through the gear unit can result in irreparable damage to rolling-contact bearings and gearing. Short circuits, voltage flashovers and deposits of conductive dust, for example, can all allow current to flow.
  Use insulators and earth the gear unit properly.
  When operating the main motor with frequency converter, please pay attention to the special measures specified in the operating instructions of the frequency converter.

- When removing any protective devices, retain their fixings safely.
- Removed protective devices must be re-fitted prior to starting up.
- Pay attention to the notices attached to the gear unit such as the rating plate, direction arrow symbol etc. Notices must not be concealed by paint or dirt. Replace any missing, illegible or damaged plates.
- Bolts which have been damaged during assembly or disassembly work must be replaced with new ones of the same strength class and type.

⚠ DANGER

Danger to life due to live system

Death or serious injury will occur.

Always shut down the gear unit and any oil supply system (whether separate or mounted on the gear unit) before you carry out any work. Secure the drive unit against being operated accidentally as follows:

- Turn off the key-operated switch.
- Remove the fuses in the power supply.
- Attach a notice to the start switch, clearly stating that work is being carried out on the gear unit.

Ensure that the entire unit is load-free so that no danger is posed when you start to dismantle components.

Reactivating the gear unit

When installing the gear unit in machines or systems, the machine or system manufacturers must ensure that the regulations, notes and descriptions contained in these operating instructions are incorporated in their own operating instructions.

Description 3

3.1 General description

The FLENDER® vertical mill gear unit (referred to below simply as "gear unit") described in these operating instructions has been developed to drive a vertical mill.

The vertical mill gear units are either bevel helical planetary gear units or bevel planetary gear units.

The axial and radial forces generated by the crushing process are transferred to the foundation via the gear unit housing.

NOTICE
Destruction of the gear unit or parts of the gear unit due to incorrect direction of rotation
The gear unit has been approved for only one direction of rotation.
Pay attention to the direction of rotation arrows on the gear unit.

More information

More information and a detailed illustrated description of the gear unit can be found in the drawings in the complete documentation of the gear unit.

3.2 Housing

Introduction

The housing is made of cast iron or steel.

The gear unit housing has the following features:

- Attachment points for moving the gear unit
- Inspection and assembly cover for inspection
- Oil filling point for refilling with oil
- Oil level indicator for checking the oil level
- Oil drain screw or oil drain valve for changing the oil
- Air filter or wet-air filter for ventilation and bleeding

Further information

Further information and a detailed illustrated description of the gear unit can be found in the drawings in the complete documentation of the gear unit.

Gear unit equipment

The following diagram shows possible equipment for preservation of the gear unit:

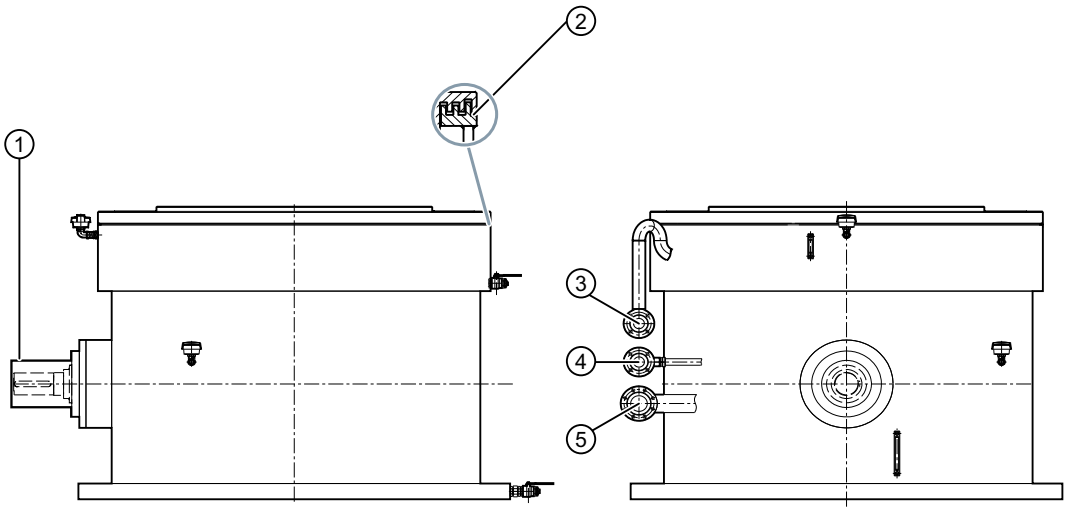

① Sealing cap (depending on the order)
② Round cord hollow profile
③ Pressure pipe (pad bearing compartment)
④ Pressure pipe (gear unit)
⑤ Suction pipe (gear unit)

Figure 3-1 Gear unit preservation equipment

The pipes can be of different design depending on the order. The precise design is specified in the drawings in the complete documentation of the gear unit.

Further information

Further information and a detailed illustrated description of the gear unit can be found in the drawings in the complete documentation of the gear unit.

3.3 Delivered state of the gear unit

The following diagram shows sketches of the arrangement of the round cord hollow profile and the rotary shaft sealing ring.

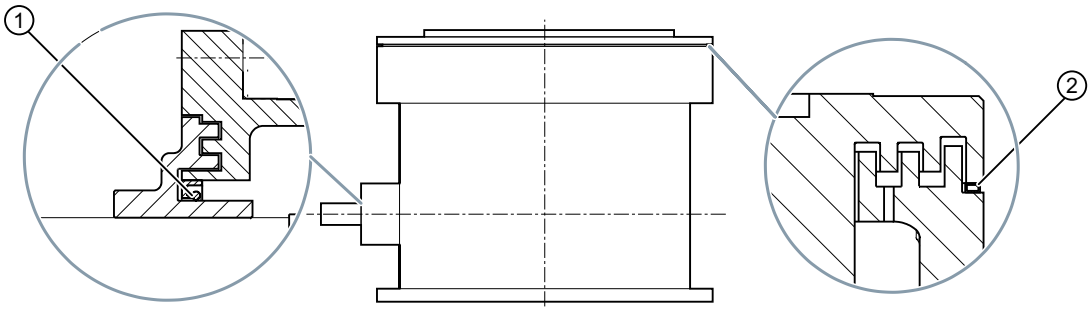

① Rotary shaft sealing ring ② Round cord hollow profile

Figure 3-2 Arrangement of round cord hollow profile and rotary shaft sealing ring

The input shaft of the gear unit is fitted with a concealed rotary shaft sealing ring that effectively seals the interior of the delivered gear unit air-tight for the specified preservation period. It is not necessary to remove the rotary shaft sealing ring when the gear unit is commissioned. The reliability of the shaft seal will not be affected if the rotary shaft seal is no longer capable of fulfilling its sealing function after the unit has been commissioned.

A round cord hollow profile is used to provide a seal between the gear unit housing and the output flange. The round cord hollow profile also acts to seal the interior of the gear unit air-tight for the specified preservation period.

Opening the gear unit

If you open the gear unit, you must commission it within one week or take measures to restore its preservation.

After renewing the preservation, within one hour close and seal the gear unit so that it is airtight.

The gear unit is deemed to have been opened if one of the following actions is taken:

- Removal of the adhesive tape at the labyrinth seal of the input shaft or the output flange
- Removal of the round cord hollow profile
- Opening of a cover
- Opening of a screw plug

3.4 Oil supply to the gear unit

Lubrication and cooling are performed by constant oil circulation by a separate oil supply system. Expansion joints are fitted in the piping system to suppress vibration and compensate for thermal expansion.

The lubrication method is specified in the list of equipment drawn up specifically for the order, in the lubrication diagram and in the separate data sheet.

Toothed components and rolling-contact bearings are forced-lubricated and cooled via the low-pressure lubrication circuit.

Further information

Additional information and a detailed illustrated description of the gear unit and the oil supply system can be found in the drawings in the complete gear unit documentation.

Additional information about the oil supply system can be found in the separate data sheet, in the list of equipment and in the oil supply system operating instructions provided in the complete gear unit documentation.

3.4.1 Hydrodynamic lubrication of tilting pad thrust bearings

The oil needs to be preheated when ambient temperatures are low. If contractually agreed, immersion heaters are integrated in the gear unit housing or in the oil tank, or a separate heating circuit is provided.

The oil is sucked in by the oil pump, cleansed in the double change-over filter (equipped with visual and electrical contamination indicator), cooled in the cooler and then transferred to the lubrication points. The oil flow is distributed through valves or orifices to lubricate the gear wheels and the pad bearing.

The volumetric flow, pressure and temperature are continuously monitored.

3.4.2 Hydrodynamic lubrication of tilting pad thrust bearings on gear units with hydrostatic starting aid

In addition to hydrodynamic lubrication, part of the oil is fed to the high-pressure pump via a pipe that branches off directly downstream of the cooler.

The high-pressure pump is a radial piston pump and delivers a constant volume of oil at every oil connection port. The oil is transferred to four pads distributed around the circumference of the thrust bearing. Before the mill is started, the oil is pumped between the pads and the race where it immediately forms a supporting oil film. After a 2-minute period at operating speed, the high-pressure pump can be shut down.

This operating phase is monitored by pressure switches or pressure transmitters.

3.4.3 Hydrostatic lubrication of tilting pad thrust bearings with radial piston pump

In addition to hydrodynamic lubrication, part of the oil is fed to the high-pressure pumps via a pipe that branches off directly downstream of the cooler.

To ensure that the high-pressure pumps are running and no pipe is defective, the oil flows are monitored for minimum and maximum pressure. The pressure depends on the pressing force actually exerted by the grinding rolls.

If the pressure or flow rate in a component subject to pressure or flow monitoring falls below the minimum value, the main drive is shut down. If the pressure exceeds the maximum limit, an alarm is issued or the main drive is shut down.

3.5 Shaft seals

Depending on requirements, shaft seals prevent oil from escaping from the gear unit or dirt from entering the gear unit.

The input shaft and the output flange are sealed by labyrinth seals. Air filters are provided on the housing to provide pressure equalization.

3.5.1 Labyrinth seals

Labyrinth seals as non-contact seals prevent shaft wear. They do not require any maintenance and improve the temperature behaviour of the gear unit.

A labyrinth seal is illustrated in the diagram below:

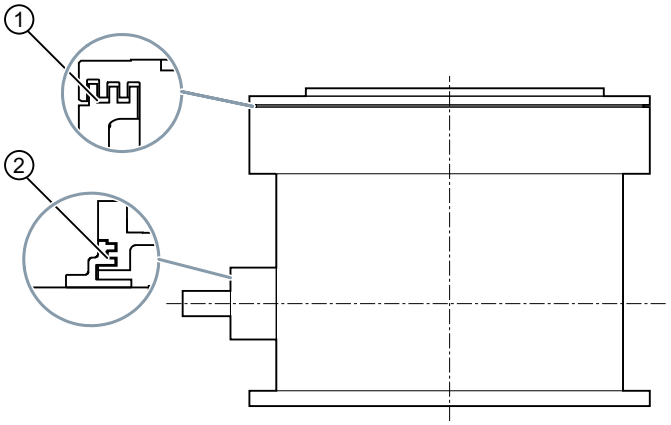

① Labyrinth seal at output flange ② Labyrinth seal at input shaft

Figure 3-3 Labyrinth seal

To work reliably, labyrinth seals must be installed in stationary, horizontal positions without dirty water or any substantial amount of dust. Overfilling the gear unit can result in leaks, the same applies to oil with a high foam content.

NOTICE
Sparking, inadmissible temperature rise and shaft seal wear due to insufficient gap dimension An insufficient gap dimension can cause sparking, inadmissible temperature rise and shaft seal wear. Ensure that the set gap dimension at the labyrinth seal is not changed when the input and output elements (e.g. coupling parts) are mounted. Rotating and stationary parts must not touch.

3.6 Couplings

Flexible couplings are used at the input end of the gear unit.

Further information

You will find further information on the coupling in the operating instructions for the coupling.

3.7 Heating

Introduction

At low ambient temperatures it may be necessary to preheat the gear unit oil before switching on the drive or while it is in operation.

Heating elements

Heating elements can be used for these applications, for example. Heating elements convert electricity into heat and transfer this to the oil in which they are immersed. The heating inserts of the heating elements are installed in protective tubes in the housing so that they can be replaced without draining off the oil first.

Make sure that the heating elements are fully immersed in the oil bath by mounting the gear unit in the correct position as shown in the drawings in the complete documentation, and by keeping the oil topped up to the minimum level.



⚠ WARNING

Explosion and fire hazard

Exposed heating elements pose a fire hazard.

Do not switch on the heating elements unless you have checked that they are completely immersed in the oil bath.

If heating elements are retrofitted, the heat output at the outer surface of the heating element must not exceed the maximum values stated in the table below.

The following table contains information about the specific heat output P_{HO} as a function of ambient temperature:

Table 3-1 Information about the specific heat output

P_{HO} in W/cm²	Ambient temperature in °C
0.9	10 to 0
0.8	0 to -25
0.7	-25 to -50

Heating element control

The heating elements can be controlled by a temperature monitor or an Oil temperature monitoring (Page 26). The temperature monitor provides a signal to be amplified when the minimum and maximum temperatures are reached.

Further information

Further information about the position of the mounted components and a detailed illustration of the gear unit can be found in the drawing in the complete documentation of the gear unit.

Further information about heating elements can be found in the separate data sheet, in the list of equipment and in the heating element operating instructions in the complete documentation for the gear unit.

Further information about the temperature monitor as well as control instructions can be found in the list of equipment and the temperature monitor operating instructions in the complete documentation for the gear unit.

3.8 Oil level indicator

For visual monitoring of the oil level, oil level indicators are mounted on the gear unit.

Check the oil level when the gear unit is stationary and the oil pump of the low-pressure lubrication circuit of the oil supply system is running.

Further information

You will find further information about the oil level indicator in the operating instructions BA 7300, which are part of the complete documentation of the gear unit.

Further information and a detailed illustration of the gear unit and the position of the mounted components can be found in the drawings in the complete documentation of the gear unit.

3.9 Oil temperature monitoring

Depending on the order specification, the gear unit can be fitted with a Pt 100 resistance thermometer or a temperature monitor for measuring the oil temperature in the oil sump.

To measure temperatures or temperature differences, connect the Pt 100 resistance thermometer or the temperature monitor to an evaluation unit (to be supplied by the customer).

Further information

Further information and a detailed illustration of the gear unit and the position of the mounted components can be found in the drawings in the complete documentation of the gear unit.

Further information about oil temperature monitoring (such as control instructions) and the technical data can be found in the operating instructions for the oil temperature monitor and in the list of equipment in the complete documentation for the gear unit.

Application planning

4

4.1 Scope of delivery

The scope of delivery is specified in the packing list. Immediately upon receiving the gear unit, check the completeness of the delivery. The packaging is not allowed to be opened for checking. Report any damage to the packaging and any missing packages to Customer Services (Page 81) immediately.

Opening the packaging is considered as changing the packaging and has an effect on the durability period of the preservation. Follow the instructions in BA 7300 in this regard.

⚠ WARNING
Serious injury through defective product
Serious injury may occur.
If the gearbox exhibits any visible damage, you should not put it into operation.

4.2 Transport

General information

The gear unit is delivered fully assembled. Additional items such as shrink disks, couplings, oil coolers, pipework and valves may be delivered separately packaged, as necessary.

When transporting the gear unit, observe the following instructions to avoid damaging the gear unit:

- Always use suitable equipment to transport the gear unit.
- Transport the gear unit without oil filling and leave it in the transport packaging.
- Do not use impermissible attachment points. The person responsible for transporting the unit is also responsible for ensuring that appropriate lifting equipment is selected and properly used.
  The threads in the end faces of the shaft ends may not be used for attaching lifting equipment.
  The output flange of the gear unit must not be lifted.
- Do not use the pipes for moving the gear unit.
- Ensure that the lifting equipment is adequately designed to accommodate the weight of the gear unit.
- If there are no rope deflectors, use suitable protective devices and equipment to prevent the gear unit damage.
- It is only permissible to store the product on the substructure supplied and in the transport position.



⚠ WARNING

Risk of crushing

There is a risk of being crushed by a component that becomes detached because the hoisting gear and load suspension device are not suitable for handling it.

When lifting, please observe the load distribution information on the packaging.

When the product is in a raised position, transport it slowly and carefully to avoid injury to persons or damage to the gear unit.

Attaching the gear unit

To transport the gear unit, only attach slings to the marked attachment points that are provided for this purpose.

Please observe the following when attaching slings to the load or raising, lowering or moving it:

- Do not exceed the specified load limits
- If you are using a load suspension device with several load hooks, make sure that the load is evenly distributed between them
- Note the eccentric centre of gravity
- Make sure that the lifting equipment is securely attached
- Keep your speed down when moving the load
- Do not allow the load to sway and do not attach the load to objects or structures inside the building
- Loads must not be suspended from the tip of a load hook
- Always place the products down on a level, non-slip and stable base



⚠ DANGER

Falling load

There is a risk of fatal injury from falling loads if these have not been securely attached to the lifting equipment.

Never stand or sit under suspended loads. Do not exceed the load limits of the lifting equipment.

Packaging

The gear unit is delivered fully assembled. Additional equipment is also delivered separately packaged, as necessary.

The gear unit may be packed in various forms, depending on the size of the unit and method of transport.

Please adhere to the symbols applied on the packaging.

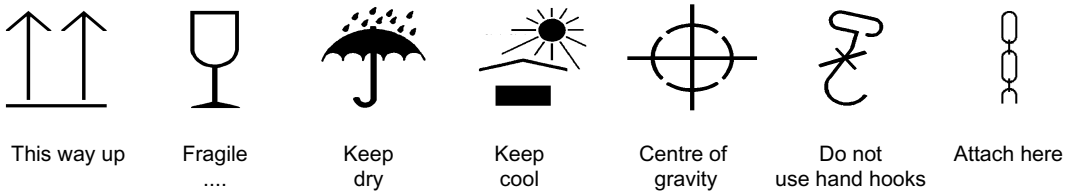

Figure 4-1 Transport symbols

4.3 Attachment points

Lifting eyes

Lifting eyes are fitted to the gear unit to assist with its transportation during manufacture and installation.

Carefully ensure that the angle of the vertical load at the gear units lifting eyes does not exceed 45°.

Transport shackles

Transport shackles are a type of lifting equipment used to lift and connect loads. The transport shackles are designed to be connected to lifting eyes.

Position of attachment points

If the gear unit foot does not have a lifting lug, use the marked lifting eyes in the ribs.

The diagram below shows the position of the attachment points on a type KMP gear unit as an example:

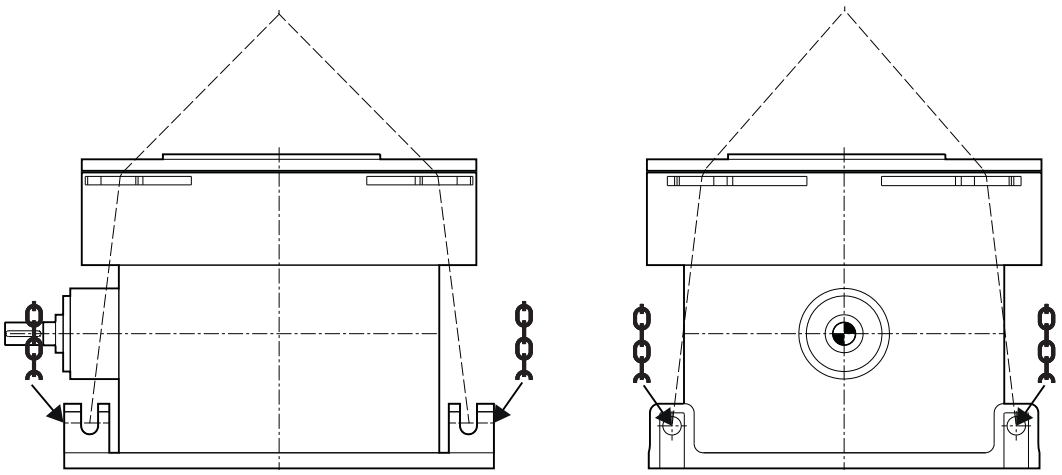

Figure 4-2 Position of the attachment points on a type KMP gear unit

The diagram below shows the position of the alternative attachment points on a type KMP gear unit as an example:

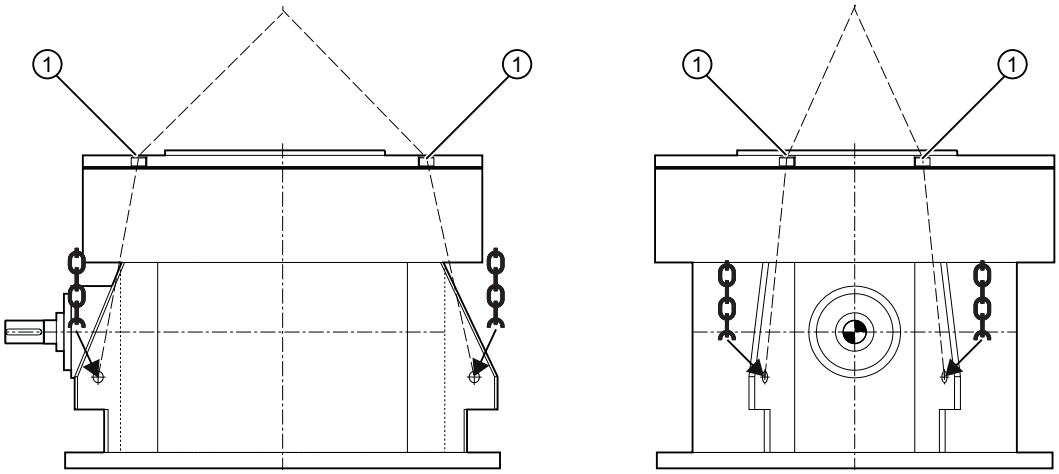

① Wooden block

Figure 4-3 Position of alternative attachment points on a type KMP gear unit

NOTICE
Damage to gear unit due to failure to deflect transport rope Damage can be caused to the gear unit during transportation if the wrong lifting equipment is used. If the gear unit head does not have rope deflectors, insert wooden blocks between the unit and the rope to prevent damage.

Drive units with additional components mounted on the gear unit (such as drive motor, coupling, etc.) may require an extra attachment point owing to the displacement in the centre of gravity caused by the mounted components.

Further information

Further information, a detailed illustration of the gear unit and the position of the attachment points can be found in the dimension and transport drawings in the complete documentation of the gear unit.

4.4 Special aspects of gear unit lubrication and preservation

4.4.1 Oil filling and oil drain

The diagram below shows the oil filling points and the oil draining points for the gear unit:

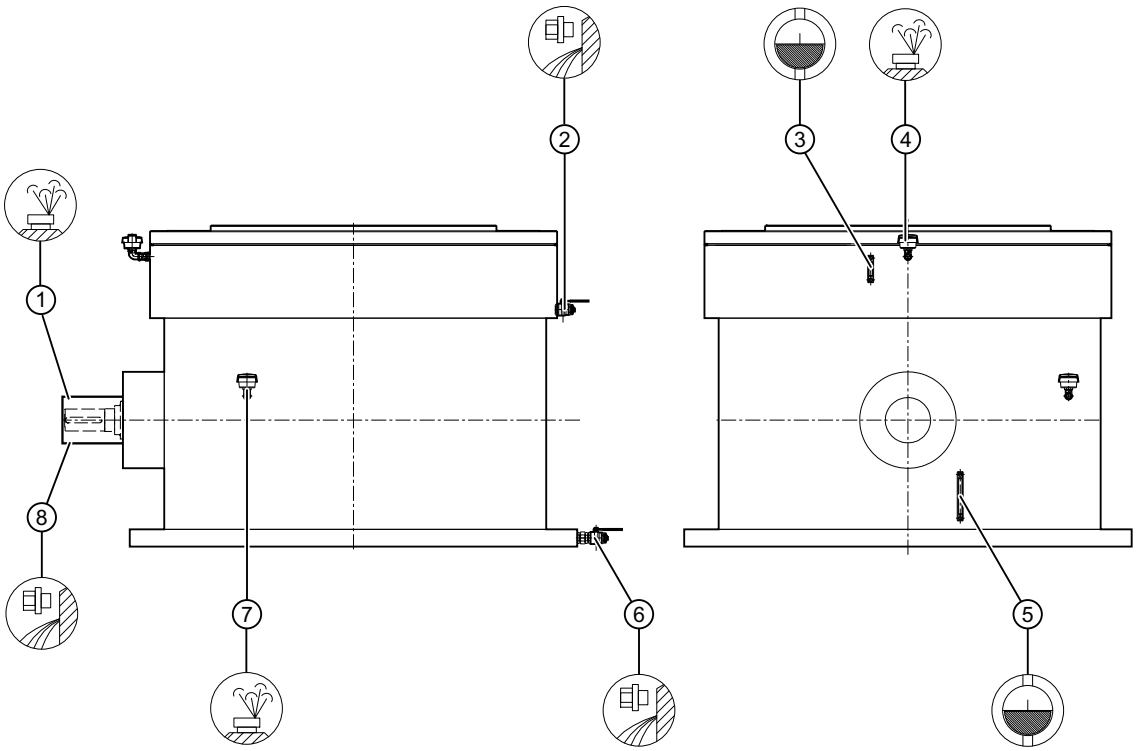

① Venting point (sealing cap)
② Oil drain (pad bearing compartment)
③ Oil level indicator (pad bearing compartment)
④ Venting point (pad bearing compartment)
⑤ Oil level indicator (gear unit)
⑥ Oil drain (gear unit)
⑦ Venting point (gear unit)
⑧ Oil drain (sealing cap)

Figure 4-4 Oil filling locations and oil drain locations

More information

More information and a detailed illustrated description of the gear unit can be found in the drawings in the complete documentation of the gear unit.

4.4.2 Filling with oil

Follow the instructions in BA 7300.

Shut down the gear unit and the oil supply system.

Filter the oil to be filled before or during filling with a 25 µm filter.

Fill the oil pumps and all oil filling holes identified with special labels with oil before you start up the gear unit. Fill the oil in through an oil filling hole provided on the oil pump or pressure pipe or identified by a label. Close the oil filling holes tight so that the oil pump does not suck in air and no oil escapes.

Fill the oil circuit of the oil cooling systems with oil. Follow the operating instructions of the oil supply system.

Fill the gear unit with oil as instructed below depending on how the oil supply system is equipped:

- If the oil supply system is equipped with three-way valves, use these valves to fill the gear unit with oil. Alternatively, you can fill the gear unit with oil via the oil drain valve of the pad bearing compartment.
- If the oil supply system is not equipped with three-way valves, use the oil drain valve of the pad bearing compartment to fill the gear unit with oil.
- If the oil supply system is equipped with a tank, you can also use this tank to fill the gear unit with oil. To do this, start the low-pressure pump of the oil supply system temporarily to ensure that the pad bearing compartment is also filled with oil.
- Fill as much oil into the gear unit as is needed to reach the specified oil level (Page 33). The approximate oil quantity is indicated in the following places:
  - If the oil supply system and the pipes are not included in the scope of delivery, then the quantity of operating oil required for the gear unit is specified on the rating plate and in the technical data. For determining the overall quantity of operating oil, please consider additionally the quantity of oil required for the oil supply system and the pipes.
  - If the oil supply system and the pipes are included in the scope of delivery, then the overall quantity of operating oil required for the gear unit is specified in the layout diagram and in the technical data in the complete documentation of the gear unit.

  When the oil supply system is switched off, its oil level is often higher than when it is switched on because oil can flow back out of the pipes and hoses. Switch the oil supply system on and off repeatedly until the oil level is correct.

Further information

Further information and a detailed illustrated description of the gear unit can be found in the drawings in the complete documentation of the gear unit.

4.4.3 Draining oil

Follow the instructions in BA 7300.

In addition to the oil draining points given in chapter Oil filling and oil drain (Page 31), use the existing residual oil draining plugs. You can find them in the drawings, which are part of the complete documentation of the gear unit.

If the oil supply system is equipped with three-way valves, you can use these valves as an alternative method of draining oil out of the gear unit. Drain off the remaining oil through the oil drainage valves. If necessary, use new screw plugs.

Further information

Further information and a detailed illustrated description of the gear unit can be found in the drawings in the complete documentation of the gear unit.

4.4.4 Checking the oil level

Check the oil level when the gear unit is stationary and the oil pump of the low-pressure lubrication circuit of the oil supply system is running.

The correct oil level is indicated by minimum and maximum markings on the oil level indicator of the main gear unit, the pad bearing compartment and on the oil supply system (on systems with tank). Hot oil can easily exceed the MAX mark on the oil level indicator.

Further information

Further information can be found in the oil supply system operating instructions in the complete documentation for the gear unit.

Further information about checking the oil level can be found in the operating instructions BA 7300 in the complete documentation for the gear unit.

4.4.5 Taking oil samples

Follow the instructions in BA 7300.

As an alternative to changing the oil (Page 69) at fixed intervals, you can arrange for the technical services of the oil manufacturer to examine an oil sample regularly every 3 months, and approve the oil for further use. In this case, the oil manufacturer guarantees that the properties of the oil will comply with Flender specifications.

4.4.6 Preservation

Introduction

The operating instructions BA 7300 describe the standard procedures for preserving gear units and oil supply systems. Follow these instructions whenever you take measures to preserve the gear unit.

As an alternative, you can also extend the durability of the interior preservation of the gear unit by operating the oil supply system (Page 36).

Special aspects of and deviations from the standard preservation procedures are described in this chapter.

4.4.6.1 Special aspects of extending the durability of the interior preservation

Introduction

Please observe the special aspects and deviations from the instructions in BA 7300 with respect to extending the durability of the interior preservation.

Improper use can damage the gear unit. Be sure to take the following precautions:

- Remove the coupling if necessary.
- Use a sealing cap (Page 35) to seal the input shaft.
- Use dummy flanges to seal the pressure, suction and return pipes.
- Use a screw plug to seal the oil drain valve at the pad bearing compartment.
- Seal the gear unit by means of a round cord hollow profile between the gear unit housing and the output flange and tape over the labyrinth seal to seal it air-tight.
  The round cord hollow profile can be purchased from Flender.

Procedure for extending the durability of the interior preservation through oil filling

To extend the durability of the interior preservation through oil filling, proceed as follows:

1. Use a screw plug to seal the lower oil drain of the sealing cap.
2. If necessary, replace the air filter at the venting point of the gear unit by a screw plug. The air filter will be required when the unit is restarted.
3. If necessary, remove the screw plug from the venting point at the pad bearing compartment.
4. Fill the sealing cap with oil via the venting point at the cap.
   Filter the oil before or during filling with a 25 µm filter.
5. When closing the venting point at the sealing cap, note the following:
   – If oil escapes from the venting point as the gear unit is being filled, close the venting point.
   – If no oil escapes from the venting point as the gear unit is being filled, do not close the venting point until the gear unit has been filled with oil.
6. Remove the screw plug from the lower oil drain valve of the gear unit if necessary.
7. Using a pump, fill the gear unit with oil via the lower oil drain valve on the unit until the oil level indicator at the pad bearing compartment is full of oil.
   Filter the oil before or during filling with a 25 µm filter.
8. Use a screw plug to seal the venting point at the pad bearing compartment. Remove the air filter beforehand if necessary. The air filter will be required when the unit is restarted.
9. Use a screw plug to seal the lower oil drain valve of the gear unit.

Procedure for extending the durability of the interior preservation using Castrol Corrosion Inhibitor N 213

To extend the durability of the interior preservation using Castrol Corrosion Inhibitor N 213, proceed as follows:

1. Use screw plugs to seal the oil drain and the venting point of the sealing cap.
2. Seal the lower oil drain valve of the gear unit.
3. Remove the screw plugs or air filters from the venting points of the gear unit and pad bearing compartment.
4. Fill the gear unit via the venting points on the gear unit and the pad bearing compartment with Castrol Corrosion Inhibitor N 213. The required quantity of Castrol Corrosion Inhibitor N 213 is specified in operating instructions BA 7300. Fill one half of this quantity into the gear unit, and the other half into the pad bearing compartment.
5. Use screw plugs to seal the venting points on the gear unit and pad bearing compartment. The air filters will be required when the unit is restarted.

NOTICE
Damage to the gear unit Damage to the gear unit is possible due to impaired corrosion protection as a result of turning the input shaft. Do not turn the input shaft of the gear unit

Result

The durability period of the interior preservation of the gear unit is extended.

The precise durability period is stated in operating instructions BA 7300.

4.4.6.2 Sealing cap

The sealing cap is designed to seal the input shaft while preservative is filled into the interior of the gear unit and is mounted on the gear unit. The sealing cap is not included in the scope of delivery as standard but can be purchased from Flender depending on the order.

The sealing cap has the following ports:

- Venting point
- Oil drain

4.4.6.3 Extending the durability of the interior preservation by operating the oil supply system

Requirements

The following requirements must be fulfilled in order to extend the durability of the interior preservation by operating the oil supply system:

- The gear unit is installed in the mill.
- The gear unit is connected to the oil supply system.

Preservative oil

You can use the following preservative oils in order to extend the interior preservation by operating the oil supply system:

- Castrol Alpha SP 220 S
- Castrol Optigear Synthetic 1390/220 (formerly Castrol Tribol 1390/220)

Procedure

To extend the durability of the interior preservation by operating the oil supply system, proceed as follows:

1. If necessary, drain off old preservative or operating oil.
2. Fill the gear unit with the preservative oil.
3. Ensure that the oil reaches the specified level (Page 33).
4. Switch on the oil supply system and turn the gear unit under no load (at least one rotation at the output).
5. Drain off the preservative oil.
6. Seal the gear unit and the oil supply system so that they are air-tight.
7. Replace the air filters with screw plugs and seal the plugs. The air filters will be required when the unit is restarted.
8. Seal the gear unit by means of a round cord hollow profile between the gear unit housing and the output flange.
   The round cord hollow profile can be purchased from Flender.
9. Tape over the labyrinth seals at the input shaft and the output flange to make them air-tight within one hour.

Result

The durability period of the interior preservation of the gear unit is extended.

The precise durability period is stated in operating instructions BA 7300.

Further information

Additional information about the oil supply system can be found in the separate data sheet, in the list of equipment and in the oil supply system operating instructions provided in the complete gear unit documentation.

Further information about preservation can be found in the operating instructions BA 7300 in the complete documentation for the gear unit.

Assembly

5

5.1 General assembly instructions

The assembly work must be performed very carefully by authorised, trained and suitably instructed personnel. Liability will be disclaimed for damage caused by the incorrect performance of this work.

Requirements

Improper use can damage the gear unit. Be sure to take the following precautions:

- Protect the gear unit against falling objects and from becoming covered over.
- Do not perform any welding work anywhere on the drive.
- Do not use the gear unit as an earthing point for electric-welding operations.
- Use all of the fastening points fitted to the particular unit design.
- Replace any bolts that are no longer fit for use by new bolts of the same strength class and type.
- Make sure that sufficient hoisting gear is available.
- When installing the gear unit in the vertical mill, follow the special instructions of the mill manufacturer.
- Do not remove the adhesive tapes from the labyrinth seals and the round cord hollow profile between the gear unit housing and the output flange until shortly before commissioning.

Mounting position and attachment points

During the actual planning phase, be sure to allow for sufficient space around the gear unit to enable subsequent upkeep and maintenance work. It must be possible to inspect the internal components through the inspection cover openings. Take suitable measures to ensure that unhindered convection across the housing surface is possible so that the gear unit does not overheat.

Do not use impermissible attachment points (Page 29). The position of the attachment points can be found in the dimension and transport drawings in the complete documentation of the gear unit. To ensure that the unit is properly lubricated during operation, please observe the mounting position specified in the dimension drawing.

NOTICE

Heating of the gear unit by external heat sources

The gear unit must not be heated by external heat sources (exposure to direct sunlight, for example) while it is in operation and measures must be taken where necessary to protect it.

You can take the following measures to protect the gear unit against this hazard:

- A sun shield
- An additional cooling device
- A temperature monitoring device with trip function in the oil sump

If you use a sun shield, this may cause a build-up of heat.

If you use a temperature monitoring device, it must be capable of issuing an alarm when the maximum permissible oil sump temperature is reached. It must also be capable of tripping the drive when the maximum permissible oil sump temperature is exceeded. The operator's process might be interrupted when the drive is shut down.



⚠ WARNING

Ignition of vapours emitted from solvents.

There is a risk of injury due to ignition of vapours emitted from solvents when carrying out cleaning work.

Please note the following:

- Ensure adequate ventilation.
- Do not smoke.
- Keep the solvents away from ignition sources.

5.2 Unpacking the gear unit

Introduction

The scope of delivery is listed in the shipping documents.

⚠ WARNING

Risk of serious injury due to defective product

A defective gear unit can result in serious injury.

Do not put the gear unit into operation if any damage is visible.

Contact Customer Services (Page 81).

Requirements

Check that everything has been delivered immediately upon receipt.

NOTICE
Damage to the gear unit due to corrosion
Exposing the gear unit to moisture can result in damage from corrosion.
Do not damage or open the packaging prematurely if the packaging is designed to preserve the unit.



⚠ WARNING
Risk of crushing
There is a risk of being crushed when the load slides.
Open the packaging slowly and carefully to avoid injury to persons or damage to the gear unit.

Procedure

To unpack and use the gear unit, proceed as follows:

1. Remove packaging and transport devices in accordance with regulations.
2. Perform a visual inspection for damage and accumulations of dirt.
3. Immediately report any damaged and/or missing parts to Customer Services (Page 81).
4. Dispose of packaging material and transport devices in accordance with regulations.

5.3 Gear unit assembly

5.3.1 Foundation

Properties of the foundation

The foundation must have the following properties:

- Flat
- Secure
- Free of vibration
- Rigid

Requirements of the foundation

The foundation must meet the following requirements:

- Construct the foundation in such a way that it does not generate any resonance vibrations and that it is isolated against the transmission of vibrations from adjacent foundations.
- Design the foundation according to the relevant weight and torque, taking into account the forces acting on the gear unit.
- Align the foundation carefully with the equipment installed on the input and output sides of the gear unit.
- Take into account any elastic deformation that may be caused by operating forces.
- Install lateral stops to prevent displacement if external forces are acting on the gear unit.

NOTICE
Poor stability Damage to the gear unit is possible if it is not mounted on a stable foundation. Make sure that the foundation on which the gear unit is mounted is flat, stable, vibration-free and rigid. It is particularly important that the surface on which the gear unit is mounted is level because this determines the contact pattern of the teeth as well as the contact pattern of the tilting pad thrust bearings, and so has an influence on the service life of the gear unit. Clean the mounting surfaces of the gear unit and foundation. All points on the gear unit mounting surface must lie between two imaginary parallel planes that are 0.1 mm per 500 mm apart. The permissible deviation of the gear unit mounting surface from the horizontal plane is 0.2 mm per 1000 mm.

Document the levelness of the installed baseplate (gear unit mounting surface) before installing the gear unit.

Keep the report in a safe place together with these operating instructions.

The mill manufacturer is responsible for the foundation structure and the bolted connections between the gear unit and foundation.

Further information

Further information about dimensions, space requirements and arrangement of supply connections can be found in the drawings in the complete documentation of the gear unit.

5.3.2 Description of assembly work

Measures to be taken prior to assembly



⚠ CAUTION

Risk of chemical burns due to chemical substances

There is a risk of chemical burns when handling aggressive cleaning agents.

Please observe the manufacturer's guidelines on how to handle cleaning agents and solvents. Wear suitable protective equipment (gloves, safety goggles). Please use binding agents to immediately clear up any spilt solvent.

Improper use can damage the gear unit. Be sure to take the following precautions:

- Use a suitable cleaning agent to remove the corrosion protection from the shafts and mounting surfaces.
- Do not allow the cleaning agent to come into contact with the shaft-sealing rings.
- Use an assembly fixture (retractor) if required to mount the input elements (e.g. coupling components) onto the shafts and lock them securely. See chapter Couplings (Page 45).
- Use suitable hoisting gear to place the gear unit in position.

Further information

Further information about removing the corrosion protection can be found in the operating instructions BA 7300 in the complete documentation for the gear unit.

Additional information on how gear units should be attached which, as a result of their weight, require a crane or lifting gear, is provided in chapter Application planning (Page 27).

If the gear unit is to be transported with mounted parts and components, then it may be necessary to use additional attachment points. The position of these attachment points can be found in the dimensional and transport drawings in the complete documentation of the gear unit.

Requirement

Follow the special instructions issued by the mill manufacturer when installing the gear unit in the vertical mill.

Procedure

Proceed as follows to install the gear unit in the machine:

1. Fit the foot fastening bolts in accordance with the mill manufacturer's instructions. Note the separate operating instructions if you are using clamping nuts.
2. Tighten the foot fastening bolts with the specified tightening torque (Page 54). If necessary, install stops to prevent displacement.

3. Align the gear unit precisely with the input and output equipment.
4. Mount the specified pins (if provided).
5. Tighten the fixing screws and hexagon nuts evenly. When tightening, ensure that the gear unit is not deformed due to excess stress.
6. Record the alignment dimensions.
7. Keep the report in a safe place together with these operating instructions.

NOTICE
Destruction of the gear unit or parts of the gear unit due to incorrect direction of rotation The gear unit or parts of the gear unit can sustain irreparable damage if the gear unit is rotated in the wrong direction. The gear unit has been approved for only one direction of rotation. Ensure that the direction of rotation of the motor matches the direction of rotation arrow marked on the input shaft of the gear unit.

NOTICE
Damage to the plain bearings The plain bearings can sustain damage. The input shaft of the gear unit may be turned by a maximum of 1 rotation at the output for positioning purposes during assembly of the gear unit if the pad bearing compartment is filled with oil up to the level required for normal operation.

5.4 Couplings

Introduction

Improper use can damage the gear unit. Be sure to take the following precautions:

- If necessary, carry out the following preparatory work in accordance with the operating instructions for the coupling:
  - Machine the finished bore
  - Mill the parallel keyway
  - Fit the axial locking element
  - Balance
- Align the individual components precisely with one another.
- Refer to the operating instructions for the coupling for instructions on how to install, maintain and operate the coupling.

⚠ WARNING
Danger of injury due to coupling rupture Flying fragments can cause fatal injury. Observe the operating instructions for the couplings.

NOTICE
Serious or irreparable damage to the gear unit and coupling caused by inaccurate or incorrect alignment Failure to accurately or correctly align the gear unit and coupling may result in serious or irreparable damage to both components. Align the individual components precisely with one another when installing the drives. Make sure that the maximum permissible displacement values are not exceeded during operation.

Further information

Further information about the coupling can be found in the operating instructions for the coupling in the complete documentation for the gear unit.

5.4.1 Assembling the coupling

Introduction

The method used to assemble the coupling varies according to type. The procedure described in these operating instructions is general rather than specific to one type of coupling.

Assemble the coupling as described in the operating instructions for the specific coupling.

Improper use can damage the gear unit. Be sure to take the following precautions:

- Do not use force (hammer blows, etc.) to fit the coupling parts as this can cause internal damage to the gear unit.
- Take care not to damage the shaft sealing rings or shaft running surfaces when fitting the coupling parts.

Procedure

To fit the coupling, proceed as follows:

1. Carefully clean the shaft ends and the coupling parts.
2. Use a suitable fixture to mount the coupling parts on the shaft ends.
3. Lock the coupling parts to prevent axial displacement.
4. Move the machines to be coupled close to one another and thenalign them (Page 47).
5. Join the coupling parts together.

Heating coupling parts prior to mounting

Depending on the order specification, it may be necessary to heat the coupling parts before mounting them.



⚠ WARNING

Risk of burns

Possible risk of serious burn injury from hot surfaces (> 55 °C).

Wear suitable protective gloves and protective clothing.

Improper use can damage the gear unit. Be sure to take the following precautions:

- The required joining temperatures can be found in the dimension drawings in the operating instructions for the coupling
- Unless otherwise instructed, heat the coupling parts by an induction heater, with a torch or in an oven.
- Use heat shields designed to protect against radiant heat in order to safeguard the shaft sealing rings against damage or heating to above 100 °C.
- Quickly fit the coupling parts on the shafts. The mounting dimensions can be found in the dimension drawings in the operating instructions for the coupling.

Further information

Further information about the coupling can be found in the operating instructions for the coupling in the complete documentation for the gear unit.

5.4.2 Aligning the coupling

Introduction

The coupling parts might become misaligned as a result of:

- Failure to accurately align the parts during assembly
- During operation:
  - Due to thermal expansion
  - Due to shaft deflection
  - Due to machine frames that are too soft

Improper use can damage the gear unit or the coupling. Be sure to take the following precautions:

- Make sure that the maximum permissible displacement values are not exceeded during operation.
  - If you are using couplings supplied by Flender, you will find the maximum permissible misalignment values in the operating instructions for the coupling.
  - If you are using couplings supplied by other manufacturers, contact them and ask them for the maximum permissible displacement values, making sure that you specify the potential radial loads for your application. Keep the operating instructions for the coupling together with these operating instructions.
- Angular and radial displacement might occur simultaneously.
  Make sure that the total value of both displacements does not exceed the maximum permissible angular or radial displacement value.

The diagram below illustrates the potential displacements:

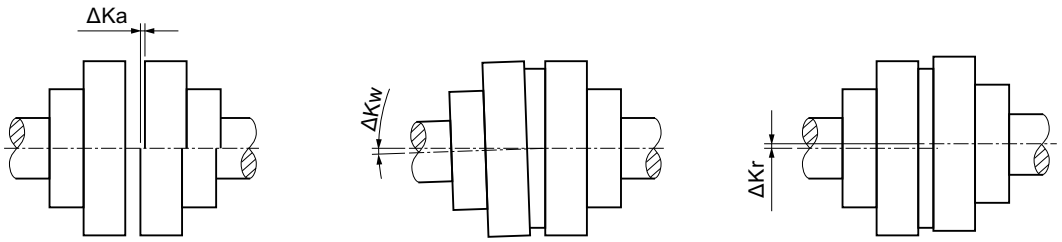

Figure 5-1 Possible displacements

Alignment

Align the individual components in two mutually perpendicular axial planes. The following can be used as alignment tools:

- Ruler (radial displacement)
- Feeler gauge (angular displacement)
- Spirit level

- Dial gauge
- Laser alignment system

You will achieve a greater degree of alignment accuracy by using a dial gauge or laser alignment system.

The diagram below shows the alignment process based on the example of a flexible coupling:

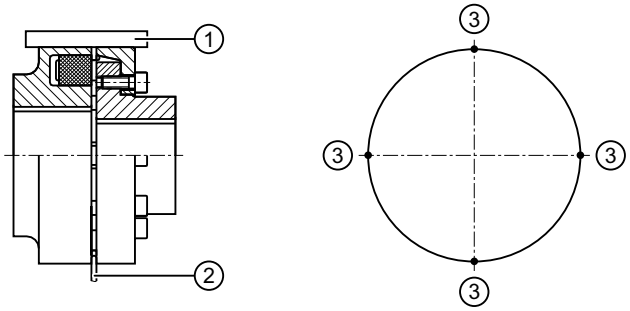

① Ruler
② Feeler gauge
③ Measuring points

Figure 5-2 Alignment process based on the example of a flexible coupling

Further information

Further information about the permissible alignment errors can be found in the coupling operating instructions in the complete documentation for the gear unit, or contact the manufacturer in question.

5.5 Mounting the pipes

5.5.1 Procedure

To mount the pipes, proceed as follows:

1. Inspect the pipes for damage and soiling.
2. Carefully clean the piping and purge the piping using low viscosity oil.
3. Remove the dummy flange and plugs.
4. Screw on the pipes according to the layout diagram.
   The pipe glands seal metallically. Use the appropriate seals for the flanges.

NOTICE
Tensioning the pipes The gear unit can be damaged if the pipes are installed so that they are under tension. Make sure that the pipes are installed free of mechanical stress. Support the pipes on supports as shown in the layout diagram included in the complete documentation of the gear unit.

5.5.2 Pickling after adaptation

Introduction

If the pipes are adapted on site, you must pickle the pipes carefully after welding.

Procedure



⚠ CAUTION
Risk of chemical burns due to chemical substances There is a risk of chemical burns when handling acids. Carefully observe the manufacturer's information when handling acids. Wear suitable protective clothing. Clean up any spilt acid immediately with a binding agent.

Proceed as follows to pickle the pipes after adaptation:

1. Close and seal off the lower end of the pipes using a suitable plug.
2. To prepare the picking solution, dilute HCl (33 % HCl) with the same quantity of water (H_2O).
3. Fill the pipes with the pickling solution.
   Allow the pickling solution to work for 1 hour. Make sure that no air bubbles form inside the pipes.
4. Drain all of the pickling solution out of the pipes and dispose of it in accordance with regulations.
5. Then flush out the pipes using an adequate amount of water.
6. After you have emptied the pipes, you must fill them with a neutralisation solution (3 % to 5 % NaOH).
   The neutralisation solution should act for 15 minutes.
7. Then flush out the pipes again using water.
8. Then thoroughly flush out the pipes using flushing oil through a 25 µm (0.001 inch) filter.

Note

Preserving the pipes

If the pipes are not mounted immediately, preserve them thoroughly.

5.6 Installing the motor

⚠ DANGER

Risk of fatal injury from flying fragments

Failure to align the unit with the required degree of accuracy can cause the shaft to rupture. A ruptured shaft can result in serious or even fatal injuries.

Align the gear unit exactly so that it conforms to the specified alignment values.

Damage to the gear unit or its components or mounted parts is possible.

The accuracy of the alignment between the shaft axes largely determines the service life of the shafts, rolling-contact bearings and couplings. As a consequence, always try to achieve a zero deviation. In this context, please also refer to the relevant operating instructions for further information about, for example, the requirements of couplings.

Procedure

To install the motor, proceed as follows:

1. Follow the motor manufacturer's operating instructions.
2. Align the drive motor together with the coupling along the centre axis of the gear unit input shaft and secure the motor in position.
3. Record the alignment dimensions.
4. Keep the report in a safe place together with these operating instructions.

5.7 Welding work on the mill

Flender provides no warranty for damage to the gear unit originally caused by welding work on the mill.



⚠ DANGER

Risk of injury due to electric shock

Injuries as a result of electric shock can occur when welding equipment is used.

Perform potential equalisation in accordance with the applicable regulations and guidelines before any welding work is carried out on the mill.

The gear unit and any parts connected to it must not be used as an earthing point for electric-welding operations.

The pad bearing compartment can be optionally fitted with an earth cable that must be connected to the output flange. Connect the earth cable to the threaded holes on the side of the output flange. When the welding work is complete, detach the earth cable from the output flange.

If no threaded holes are available on the gear unit for an earth connection, please take suitable alternative measures. This work must always be done by specialist electricians.

When electric welding is carried out anywhere on the mill, the welding current must not be conducted through the gear unit. For this reason, the welding current return cable must always be directly connected to the component to be welded.

5.8 Connecting components

5.8.1 Installing further mounted components supplied as separate items

Procedure

To install further mounted components that are supplied as separate items, proceed as follows:

1. Seal all loose parts having a threaded connection with liquid sealant.
2. Install any pipe fittings supplied as separate items whose tapped holes are sealed with sealing plugs as shown in the drawings supplied.
3. Connect electrical monitoring devices as shown in the terminal diagrams, lists of equipment and special operating instructions.

NOTICE
Damage to the gear unit
Potential damage to the gear unit due to incompatibility of operating oil and sealant.
Ensure that no sealant can get into the gear unit.

Further information

You will find further information on the electrical monitoring devices in the operating instructions for the electrical monitoring devices, which are part of the complete documentation of the gear unit.

You will find further information and technical data for the mounted components in the list of equipment drawn up specifically for the order, which is part of the complete documentation of the gear unit.

You will find further information, terminal diagrams and lists of equipment, which are part of the complete documentation of the gear unit.

5.8.2 Making terminal box connections for pre-wired gear units

Connect up all pre-wired gear units as shown on the circuit diagram in the terminal box.



⚠ WARNING
Explosion and fire hazard
Exposed heating elements pose a fire hazard.
Do not put heating elements into service until you have checked that they are completely immersed in the oil bath.

Further information

You can find further information about pre-wired gear units in the order-specific list of equipment in the complete gear unit documentation.

5.8.3 Gear units with mounted components

Depending on the order specification, the gear unit can be equipped with various components.

Connect the closed-loop control and open-loop control electrical devices corresponding to the specifications of the device supplier.

Further information

You can find additional information on operation and maintenance in the associated operating instructions, provided in the complete gear unit documentation.

You can find the technical data of the mounted components in the contract-list of equipment provided in the complete gear unit documentation.

5.8.4 Installing a separate oil supply system

Procedure

To connect the oil supply system to the gear unit, proceed as follows:

1. Remove the dummy flange from the suction and delivery line before connecting the system.
2. Connect the system to the gear unit as shown in the layout diagram in the complete documentation and install the system separately.
3. When installing the system, make sure that the pipework is not subjected to mechanical stresses.

Further information

Further information about the oil supply system can be found in the oil supply system operating instructions in the complete documentation for the gear unit.

5.8.5 Electrical connections

Requirements

Do not use any motor that exceeds the specified speeds of the gear unit as otherwise the gear unit may become damaged. The speeds are displayed on the rating plate.

Improper use can damage the gear unit. Be sure to take the following precautions:

- Before connecting the motor, determine the phase sequence of the three-phase power system using a phase-sequence indicator.
- Connect the motor corresponding to the predefined direction of rotation.

Procedure



⚠ DANGER

Electric shock

Live parts can cause electric shock.

Ensure that the entire plant is de-energised before starting electrical installation work. Carefully observe the five safety rules (Page 11).

To connect the motors and monitoring devices, proceed as follows:

1. Ensure that the connections of the motors and monitoring devices are not damaged.
2. Connect up the motors and monitoring devices according to the terminal diagram and the relevant operating instructions.
3. Insulate all cable entry points (glands) at electrical equipment as required for the environment in which the equipment will operate.

Further information

You can find additional information about the electrical connections in the terminal diagrams and equipment lists provided in the complete gear unit documentation.

5.9 Tightening procedure

5.9.1 Introduction

Bolts

The bolts must have the following properties:

- Made of steel (as per the specified strength class)
- Black-annealed or phosphatised
- Lightly oiled (do not add additional oil)

Note

Replacing bolts

Replace any bolts that are no longer fit for use by bolts of the same type and strength class.

Mating threads

The mating threads must have the following properties:

- Made of steel or cast iron
- Dry, cut threads

Note

Using a lubricant

As a rule, lubricants may not be used, because this can result in the bolt connection becoming overloaded.

5.9.2 Bolt connection classes

In order to affix fastening bolts, note the information in the following table:

Table 5-1 Information on tightening fastening bolts

Mounting	Bolt connection class	Scatter of the torque emitted on the tool	Tightening procedure
	D	± 10 % to ± 20 %	• Torque-controlled tightening with mechanical screwdriver
Inspection cover Protection cover	E	± 20 % to ± 50 %	• Tightening with pulse screwdriver or impact wrench, without adjustment checking device • Tightening by hand, using a wrench without torque measuring device

Further information

You can find additional information about tightening torques when mounting motor and brake in the operating instructions from the particular manufacturer.

5.9.3 Tightening torques and preload forces

If the drawings do not specify any tightening torques or preload forces, refer to the following table for the tightening torques. Comply with the tightening torques specifically mentioned in the production and assembly drawing.

The tightening torques apply to friction values of $\mu_{total} = 0.14$.

The following table lists the preload forces and tightening torques for bolt connections, strength classes 8.8; 10.9; 12.9:

Table 5-2 Preload forces and tightening torques

Nominal thread diameter	**Bolt strength class**	**Preload force for bolt connection classes from the table in chapter Bolt connection classes (Page 55)**			**Tightening torque for bolt connection classes from the table in chapter Bolt connection classes (Page 55)**		
d		**C**	**D**	**E**	**C**	**D**	**E**
mm		**$F_{M\ min.}$ N**			**M_A Nm**		
M10	8.8	18 000	11 500	7 200	44.6	38.4	34.3
	10.9	26 400	16 900	10 600	65.4	56.4	50.4
	12.9	30 900	19 800	12 400	76.5	66.0	58.9
M12	8.8	26 300	16 800	10 500	76.7	66.1	59.0
	10.9	38 600	24 700	15 400	113	97.1	86.6
	12.9	45 100	28 900	18 100	132	114	101
M16	8.8	49 300	31 600	19 800	186	160	143
	10.9	72 500	46 400	29 000	273	235	210
	12.9	85 000	54 400	34 000	320	276	246
M20	8.8	77 000	49 200	30 800	364	313	280
	10.9	110 000	70 400	44 000	520	450	400
	12.9	129 000	82 400	51 500	609	525	468
M24	8.8	109 000	69 600	43 500	614	530	470
	10.9	155 000	99 200	62 000	875	755	675
	12.9	181 000	116 000	72 500	1 020	880	790
M30	8.8	170 000	109 000	68 000	1 210	1 040	930
	10.9	243 000	155 000	97 000	1 720	1 480	1 330
	12.9	284 000	182 000	114 000	2 010	1 740	1 550
M36	8.8	246 000	157 000	98 300	2 080	1 790	1 600
	10.9	350 000	224 000	140 000	2 960	2 550	2 280
	12.9	409 000	262 000	164 000	3 460	2 980	2 670
M42	8.8	331 000	212 000	132 000	3 260	2 810	2 510
	10.9	471 000	301 000	188 000	4 640	4 000	3 750
	12.9	551 000	352 000	220 000	5 430	4 680	4 180
M48	8.8	421 000	269 000	168 000	4 750	4 090	3 650
	10.9	599 000	383 000	240 000	6 760	5 820	5 200
	12.9	700 000	448 000	280 000	7 900	6 810	6 080
M56	8.8	568 000	363 000	227 000	7 430	6 400	5 710
	10.9	806 000	516 000	323 000	10 500	9 090	8 120
	12.9	944 000	604 000	378 000	12 300	10 600	9 500
M64	8.8	744 000	476 000	298 000	11 000	9 480	8 460
	10.9	1 060 000	676 000	423 000	15 600	13 500	12 000
	12.9	1 240 000	792 000	495 000	18 300	15 800	14 100

Nominal thread diameter	Bolt strength class	Preload force for bolt connection classes from the table in chapter Bolt connection classes (Page 55)			Tightening torque for bolt connection classes from the table in chapter Bolt connection classes (Page 55)		
d mm		C	D	E	C	D	E
		$F_{M\ min.}$ N			M_A Nm		
M72x6	8.8	944 000	604 000	378 000	15 500	13 400	11 900
	10.9	1 340 000	856 000	535 000	22 000	18 900	16 900
	12.9	1 570 000	1 000 000	628 000	25 800	22 200	19 800
M80x6	8.8	1 190 000	760 000	475 000	21 500	18 500	16 500
	10.9	1 690 000	1 100 000	675 000	30 500	26 400	23 400
	12.9	1 980 000	1 360 000	790 000	35 700	31 400	27 400
M90x6	8.8	1 510 000	968 000	605 000	30 600	26 300	23 500
	10.9	2 150 000	1 380 000	860 000	43 500	37 500	33 400
	12.9	2 520 000	1 600 000	1 010 000	51 000	43 800	39 200
M100x6	8.8	1 880 000	1 200 000	750 000	42 100	36 200	32 300
	10.9	2 670 000	1 710 000	1 070 000	60 000	51 600	46 100
	12.9	3 130 000	2 000 000	1 250 000	70 000	60 400	53 900

5.10 Final work

Measures

Once all the elements have been assembled or connected, perform the following final work:

- Check whether all devices dismantled for transportation have been reassembled.
- Check all bolt connections for tightness after installation of the gear unit has been completed.
- Check the alignment after tightening the fastening elements. The alignment must not have changed in any way.
- Lock the oil drain valves against accidental opening.
- Protect the gear unit against falling objects.
- Check that the guards over rotating parts are securely fastened.
  Contact (accidental or deliberate) with rotating parts is not permitted.
- Perform potential equalisation in accordance with the applicable regulations and guidelines. If no threaded holes are available on the gear unit for an earth connection, please take suitable alternative measures. This work must always be done by specialist electricians.
- Protect the cable entries against penetrating moisture.

More information

More information about the gear unit and all mounted or separately supplied components can be found in the operating instructions of the relevant components included in the complete documentation for the gear unit.

You can find more technical specifications in the separate data sheet in the complete gear unit documentation.

Commissioning 6

Introduction

The precondition for the warranty is first commissioning by specialists from Flender or by skilled persons who have been appropriately trained and are authorised by Flender.

Flender urgently recommends that the vertical mill is first driven by the gear unit under the supervision of these specialists or skilled persons.

Follow the operating instructions, particularly with regard to maintenance work on the vertical mill, during which the mill rotates and the gear unit rotates with it.

NOTICE
Damage to the gear unit
Every time the drive is set in motion represents a commissioning process. Do not commission the gear unit without having the operating instructions at hand.
During commissioning, start up the gear unit in the load-free condition and without milled material or roller pressure.
Adjust the sealing air seal if one is fitted.

6.1 Measures prior to commissioning

Take the following measures before commissioning the gear unit:

- Read and observe the operating instructions.
- Follow the checking procedure (Page 60).
- Replace the screw plugs with the air filters. Follow the instructions in BA 7300.
- Fill the gear unit with oil.
- Gear unit with oil supply system: Check that the oil supply system is working properly.
- Check the oil level.
- Check the gear unit for leaks.
- Gear unit with oil supply system: Follow the instructions in Measures prior to commissioning with oil supply system (Page 60).
- Ensure that all pipes and components are filled with oil.
- Restart: Make sure that the drive cannot be restarted after safety equipment has responded unless the restarting lockout is cancelled.

Further information

Further information about oil can be found in the operating instructions BA 7300 in the complete documentation of the gear unit.

Further information about individual components can be found in the operating instructions for the components in the complete documentation for the gear unit.

6.1.1 Rinsing before first commissioning

Follow the instructions in BA 7300.

Filter the flushing oil before or during the flushing operation in the bypass flow with a 25 µm filter.

The flushing oil can be reused for a maximum of 6 flushing operations.

Start up the oil pump of the low-pressure lubrication circuit and allow it to run for at least 6 hours for flushing. If the system has a high-pressure lubrication circuit, switch this on 2 minutes later.

6.1.2 Gear unit with oil supply system

Take the following measures before commissioning a gear unit with an oil supply system:

- Make sure that the pressure in the oil supply system components does not exceed the maximum permissible pressure.
- Make sure that the temperature of the oil supply system components does not exceed the maximum permissible temperature.
- Using the oil supply system, lubricate the gear unit for 30 minutes in a pre-lubrication phase. During this time, the rolling-contact bearings, tilting pad thrust bearings and gearing are supplied with sufficient oil for starting.
  On the oil supply system, make sure that the low-pressure lubrication is switched on first and the high-pressure lubrication only after 2 minutes. This time is necessary to achieve pressure equalisation in the oil circuit.
  Switch on the high-pressure pumps no later than 5 minutes before starting the auxiliary or main motor.

Further information

You will find information on the oil supply system in the data sheet, in the list of equipment and in the operating instructions for the oil supply system, which are part of the complete documentation of the gear unit.

6.1.3 Checking procedure

Check all drive components after completion of assembly and before the first cold trial run. Remove all material residue, tools and assembly equipment.

If the oil supply system was supplied by Flender, it has already been function-tested. Before the trial run of the mill, test the electrical interlocking between the oil supply system and the drive motors.

To perform the checking procedure, inspect the following items:

- Correct implementation of the foundation
- Foundation bolts tightened as specified
- The gear unit is properly fixed to the foundation
- The grinding table is properly installed
- The directions of rotation of the motor and gear unit match (see rotation direction arrow)
- The adhesive tapes have been removed from the labyrinth seals
- The round cord hollow profile between the housing and the output flange has been removed
- All air filters are installed
- Mounting and cleaning of all pipes as prescribed in the assembly instructions
- The coupling and motor are correctly aligned
- The correct configuration of the pipes and hoses
- Tightness of the pipe and hose connections
- Signs of oil foaming in the oil reservoir (tank for oil supply system and gear unit) during operation
  If signs of oil foaming are visible, check all of the suction pipe connections. Contact the oil manufacturer if necessary.
- The tank for the oil supply system, the gear unit and the pad bearing compartment of the gear unit are full of oil
  Carry out the inspection when the oil system is running and the gear unit is stationary.
- The oil level is between the minimum and maximum markings
- Connection of all the monitoring devices as shown in the terminal diagram
- The oil supply system has been function-tested
- The electrical interlocking between the gear unit, the oil supply system and the drive motor

Document the results of the inspections for the following:

- The interlocking system is functioning as per the interlocking instructions
- Adjustment and correct operation of flow monitors or flow transmitters, pressure switches or pressure transmitters, temperature sensors and level monitors
- Cooling water inlet open (for oil supply systems with water-oil cooler)
- Adequate air supply to fans (for air-cooled oil supply system)
- Has the alignment between the gear unit and adjacent components been checked, recorded and documented?
- Levelness of the foundation

You will find further checking procedures in the operating instructions of the following components:

- Coupling
- Motor
- Oil supply system
- Vertical mill

6.2 Measures during commissioning

Please observe the following measures to commission the gear unit and document these:

- For gear units with oil supply system: Check that the oil supply system is working properly.
- Check the oil level.
- Measure the oil sump temperature (Page 72) after the gear unit has run in.
- Check the tightness of the shaft seal on the gear unit (Page 23).
- Check that no contact with rotating parts is possible.
- Check whether the shutoff valves are open.
  - Check that all of the oil drain valves are closed.
  - Ensure that all of the other shutoff valves are open.
- Check all the connection lines are securely tightened and leak-free.
- Measure the vibration levels at the gear unit (Page 72) following commissioning and continuous operation in order to create initial and comparison values.

Further information

You can find additional information on the topic of oil in the operating instructions BA 7300, provided in the complete gear unit documentation.

Further information about the oil supply system can be found in the oil supply system operating instructions in the complete documentation for the gear unit.

6.2.1 Initial test run

Requirements

Meet the following requirements before the initial test run:

- Follow the operating instructions.
- Start up the gear unit.

Procedure

To perform the initial test run, proceed as follows:

1. Run the gear unit for several hours at partial load (50 % to 70 %), if possible. If a test run under partial load is not possible, you can operate the gear unit under no-load with the rollers lifted.
2. If no faults occur, gradually increase the load at suitable time intervals up to full load while constantly monitoring the gear unit.
3. During this time, pay attention to the following items:
   - Noise
     During this time, listen for anomalous noises at various points on the gear unit using a suitable device.
   - Foaming
     Check whether the oil in the oil reservoir (tank for oil supply system and gear unit) is exhibiting low levels of surface foam. Surface foam up to approximately 10 mm is acceptable. If foaming is found, contact the oil manufacturer if necessary. Foaming will decrease as the temperature rises.
   - Vibration measurement
     For more information, refer to chapter Measuring the vibration levels (Page 72).
   - Oil leaks
     Check the screw connections for oil leaks. If necessary, provide extra sealing.

   After the first run, the oil level sinks. As the gear unit warms up, the oil level rises to the height of the marking for the operating oil level.
4. Communicate the date of first commissioning in writing to Flender within 4 weeks.

6.2.2 Gear units with heating

Please observe the following measures to commission the gear unit with heating:

- Ensure that the heating elements are not exposed.
- Check the switching points of the temperature monitor.

⚠ WARNING

The oil sump can catch fire

The oil sump can catch fire if exposed heating elements are switched on.

Never switch on the heating elements until you have checked that they are completely immersed in the oil bath.

More information

More information about heating elements can be found in the heating element operating instructions in the complete documentation for the gear unit.

Operation 7

7.1 Operating data

Introduction

To ensure correct, trouble-free operation of the system, observe the operating data of the gear unit and, depending on the order specification, the data in the operating instructions for the oil supply system.

The valid operating data can be found in the annex Technical data (Page 87).

You can find the critical values for the inlet oil temperature in the lubrication diagram and in the list of equipment in the complete gear unit documentation.

You will find information about the oil pressure in the data sheet, in the list of equipment or in the drawings in the complete documentation of the gear unit.

Further information

Further information about the technical data of the gear unit can be found in the data sheet and the list of equipment in the complete documentation for the gear unit.

7.2 Irregularities in operation

Introduction

Switch off the drive assembly immediately if it exhibits irregular behaviour during operation.

A few irregularities are listed below as examples:

- Oil temperature exceeds the maximum permissible value
- Alarm tripped by the pressure monitor in the oil cooling system or oil supply system
- Unusual operating noise
- Changes in the flow volumes

Document continuous changes in the operating performance of the gear unit by recording trends.

NOTICE
Faults can cause damage to the gear unit
The gear unit might sustain damage if it is not shut down when a fault occurs.
Switch off the drive assembly immediately if any fault condition develops.

NOTICE
Parts can be damaged as a result of an inadmissible temperature rise
After the gear unit has been shut down as a result of an excessive oil intake temperature, the gear unit must be operated for at least one hour with cool oil via the lubricating system.
During this hour, while being cooled by the lubricating system, it is not permissible to switch on the main motor.

Rectifying irregularities in operation

Proceed as follows to rectify any irregularities in operation:

1. Switch off the drive assembly if it exhibits irregular behaviour during operation.
2. Refer to the Fault information (Page 76) to find the cause of the fault.
3. If you still cannot determine the fault cause, contact Flender Customer Services (Page 81).

7.3 Taking the unit out of service

Introduction

After the gear unit has been shut down, it is protected against internal corrosion by the operating oil for 7 days.

You have to take various measures depending on the time for which the gear unit will remain out of service.

Taking the unit out of service

Improper use can damage the gear unit. Be sure to take the following precautions:

- Switch off the drive assembly.
- During short interruptions: Continue to run the complete oil supply system.
- During long interruptions:
  - Continue to run the oil supply system for approx. 60 minutes to avoid heat accumulation. However, damage can be ruled out due to a sudden stoppage, e.g. due to power failure. When shutting down an oil supply system with high-pressure lubrication circuit, ensure that the high-pressure pumps are shut down before the low-pressure pumps.
  - If gear units are operated in saline environments or in close proximity to salt water, the oil supply system should always operate continuously in order to prevent corrosion damage. In addition, the gear unit must be turned every two weeks via the auxiliary drive or the main motor (at least one rotation at the output flange).
    If this is not possible, take measures to preserve the gear unit.
  - When the gear unit is taken out of service for a period in excess of 7 days, start up the oil supply system once a week and allow it to run for one hour. At the same time, make sure that the gear unit is turned every 2 weeks (at least one rotation at the output flange).
    If it is not possible to start up the lubrication system once a week and to turn the gear unit every 2 weeks, take measures to preserve the gear unit.
  - Close the shutoff valves for the cooling water inlet and drain lines in case of gear units with water/oil cooler. Drain the water from the water/oil cooler if there is a risk of frost and remove residual water with compressed air.
  - Follow the preservation procedure described in operating instructions BA 7300.

⚠ **WARNING**
Risk of eye injury from compressed air
Water residue and dirt particles can cause damage to eyes.
Wear suitable safety goggles.

Servicing 8

8.1 General maintenance information

The operator must ensure compliance with the stipulated time limits. This also applies if the maintenance activities are included in the operator's internal maintenance schedules.

The gear unit could be damaged if the stipulated time limits for maintenance and servicing are not observed.

The time limits stipulated in the maintenance schedule are largely dependent on the conditions of use of the gear unit. For this reason, it is only possible to state average time limits here.



⚠ WARNING

Danger to life due to live system

Working on a gear unit while it is in operation is hazardous and can result in potentially fatal injuries.

Always shut down the gear unit and any oil supply system (whether separate or mounted on the gear unit) before you carry out any work. Take measures to prevent the accidental restarting of the drive assembly. Display a warning notice that clearly states that work is being carried out on the gear unit.

8.2 Maintenance schedule

Maintenance and servicing activities

The following table provides an overview of all maintenance and servicing activities which you are required to perform continuously or at regular intervals.

Table 8-1 Maintenance and servicing activities

Intervals and time limits	Measures
As required	Clean the air filter Replace the air filter element Clean the gear unit Replace the oil filter
Weekly	Check for leaks Check the oil level Check the oil temperature Check for changes in the gear unit noise Inspect the protection devices

Intervals and time limits	Measures
Every 4 weeks	Visually inspect the gear unit for cracks, leaks and damage Inspect the oil supply system for dirt Inspect instruments installed in situ (temperatures, oil pressures)
1 000 operating hours after commissioning	Analyse the oil Change the oil (or depending on results of the oil sample test (Page 33))
Every 3 months	Clean the oil filter Clean the air filter Check that the foot fastening bolts are tight
Every 6 months	Inspect mounted components (couplings, auxiliary drive)
Every 12 months	Visually inspect the tooth flanks for damage Inspect the hose lines Replace the air filter element Analyse the oil
Every 10 000 operating hours, at least every 18 months	Change the oil (or depending on results of the oil sample test (Page 33)) Check the air-oil cooler (the same time as you change the oil) Check the water-oil cooler (the same time as you change the oil)
Every 2 years	Carry out a general inspection of the gear unit Clean the gear unit
6 years after the specified date of manufacture	Change the hoses

More information

More information about additional maintenance and servicing activities can be found in the separate data sheet in the overall documentation for the gear unit.

More information about installed components can be found in the operating instructions for the components in the complete documentation for the gear unit.

8.3 Maintenance and servicing work

Introduction

You can find maintenance and servicing measures relating to gear unit lubrication and preservation, which are not provided in this chapter, in BA 7300 in the complete gear unit documentation.

8.3.1 Contamination limits

The following table contains the material-specific contamination values of the oil:

Material	Limit proportion [mg/kg]	Possible source
Iron (Fe)	40	Wheel rim with internal teeth, gear teeth, rolling-contact bearing cages
Chromium (Cr)	+ 4	Plain and rolling-contact bearings, gear teeth
Aluminium (Al)	+ 4	Oil pump bearings
Copper (Cu)	+ 4	Rolling-contact bearing cages
Lead (Pb)	+ 6	Thrust bearings, pump bearings
Tin (Sn)	+ 2	Thrust bearings, pump bearings
Nickel (Ni)	+ 2	Gear teeth
Zinc (Zn)	+ 10	Zinc-based primer (sometimes used as an additive). In this case, contact Flender.
Silicon (Si)	+ 5	Cement dust or other environmental influences, some oils may contain silicon
Water (H_2O)	0.03 %	Condensation, water/oil cooler defective (mineral oil)

The values preceded by "+" refer to the reference sample of the fresh oil.

Note that the deviation in the viscosity of the oil sample from the viscosity of the oil specified in the technical data should not exceed 10 %.

NOTICE
Damage to the gear unit The gear unit may be damaged by dirty operating oil and mixing different oil grades. Replace the oil if the contamination limits stated in the table or the purity class -/19/16 according to ISO 4406 is exceeded. When changing the oil, fill the gear unit with the oil grade that was previously used. Do not mix oils of different grades or manufacturers.

8.3.2 Servicing

Preparatory measures

Maintenance encompasses all of the measures required to keep and restore the reference state as well as to identify and assess the actual state of technical equipment of a system.

Attach and secure the individual components and large assemblies to the lifting equipment carefully during replacement.

8.3.3 Checking the oil temperature

Damage to the gear unit due to excessively high oil sump temperatures.

The gear unit can sustain damage due to inadequate lubrication if you allow it to operate at oil sump temperatures above the maximum permissible temperature.

Do not operate the gear unit above the maximum permissible oil sump temperature.

Procedure

Proceed as follows to check the oil temperature:

1. Allow the gear unit to reach its normal operating temperature.
2. Operate the gear unit with the maximum driven machine power.
3. Measure the temperature of the oil in the oil sump.
4. Compare the measured value with the maximum permissible oil temperature.
   Depending on the order, you can find the maximum permissible oil temperature in the lubrication diagram and in the list of equipment in the complete gear unit documentation.
5. Immediately stop the gear unit if the maximum permissible oil temperature is exceeded.
   Contact Flender Customer Services.

8.3.4 Measuring the vibration levels

For KMP type, the diagram below shows the measuring points for portable vibration measurements as an example:

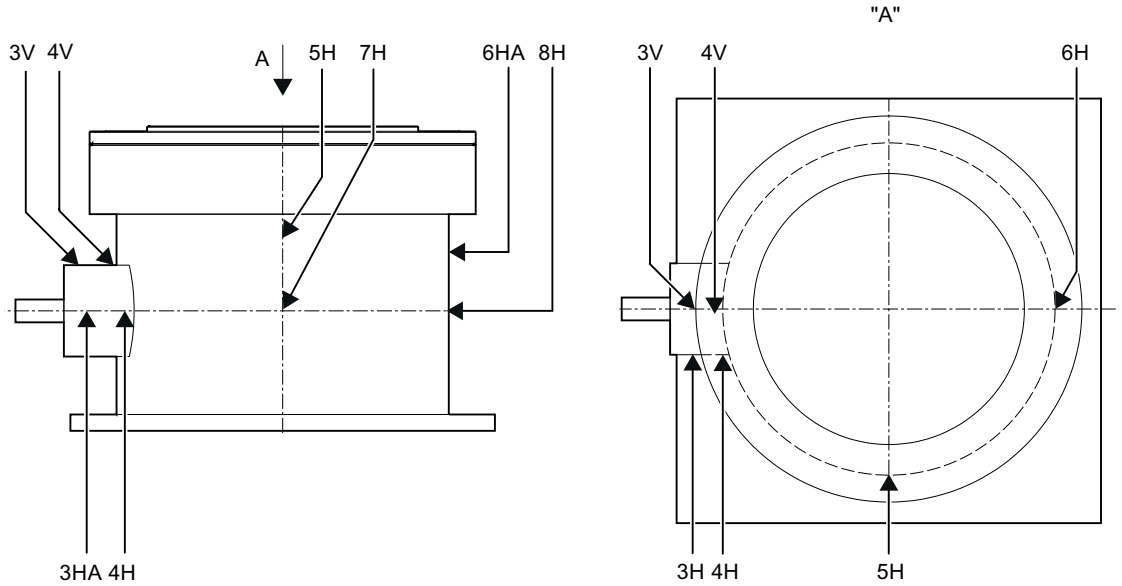

V Vertical measuring point

H Horizontal measuring point

Figure 8-1 Measuring points for vibration measurements

(Measuring points 1 and 2 are positioned at the motor bearing points.)

You can contact Customer Services (Page 81) for the precise layout drawing for portable vibration measurement for types KMP, KMPS and KMPP depending on the order.



⚠ WARNING

Risk of becoming entangled in rotating parts

There is danger that rotating parts may catch hold of you or pull you in.

If you are taking a vibration measurement at a gear unit while it is in operation, make sure that you do not take the measurement in immediate proximity to rotating parts to avoid accidental contact with them.

The points shown in the diagram are standard measuring points. All gear units of this type in the field can be measured at these points. This enables you to make a direct comparison with other gear units of the same type or size.

Arrange for the vibration measurements to be carried out and evaluated by or in close cooperation with Flender personnel. It will then be possible to apply experience from previous measurements on comparable gear units to the measurement process and to the evaluation of the measurement results.

When taking vibration measurements, please note the following general points:

- Take measurements only at those points shown in the diagram.
- Do not take measurements at resonating bodies such as ribs, inspection covers, pipes, etc.
- Document the motor power at the time the measurement was taken. Power fluctuations can cause variations in the measurement result.

In order to record the vibration profile of the gear unit, take a base measurement after the whole system has been commissioned and been in continuous operation. This will form the basis for a trend analysis if further measurements are taken at monthly intervals.

The gear unit is a Class III driven machine when assessed according to ISO 10816. As regards this assessment, it must be noted that the axial forces generated by the crushing process are transferred to the foundation via the gear unit housing. The possibility that vibrations are attributable to the grinding process rather than the operation of the gear unit cannot therefore be precluded. For this reason, the extent to which the standard ISO 10816 can be applied to this type of gear unit is limited.

Further information

Further information and a detailed illustrated description of the gear unit can be found in the drawings in the complete documentation of the gear unit.

More information about diagnosing vibration can be found on the Internet (https://www.flender.com/service).

8.3.5 Cleaning the gear unit

Introduction

Layers of dust may affect the dissipation of heat through the surface of the gear unit, resulting in overheating. Depending on the operating conditions, it may therefore be necessary to clean the gear unit more frequently than stated in the maintenance schedule.

Procedure

To clean the gear unit, proceed as follows:

1. Use a hard brush to remove any stubborn dirt from the gear unit. Never use a high-pressure cleaning device or water.
2. Remove any spots of corrosion.

8.3.6 Cleaning the air filter and replacing the air filter element

8.3.6.1 Cleaning the air filter

Follow the instructions in BA 7300.

NOTICE
Damage to the gear unit due to penetration of foreign bodies Damage to the gear unit due to penetration of foreign bodies is possible due to the ambient conditions of the mill. Do not allow foreign bodies to enter the gear unit.

8.3.6.2 Replacing the air filter element

Introduction

The paper filter cannot be cleaned.

Procedure

Proceed as follows to replace the air filter element:

1. Remove the air filter cap
2. Replace the filter element.
3. Mount the air filter cap.

8.3.7 Cleaning the double change-over filter

Procedure

To clean the double change-over filter, proceed as follows:

1. Inspect the double change-over filter.
2. Follow the operating instructions for the double change-over filter.

Further information

You can find additional information about the double change-over filter in the double change-over filter operating instructions provided in the complete gear unit documentation.

You can find additional technical data in the separate data sheet and in the list of equipment provided in the complete gear unit documentation.

8.3.8 Welding work on the mill

Flender provides no warranty for damage to the gear unit originally caused by welding work on the mill.



⚠ DANGER

Risk of injury due to electric shock

Injuries as a result of electric shock can occur when welding equipment is used.

Perform potential equalisation in accordance with the applicable regulations and guidelines before any welding work is carried out on the mill.

The gear unit and any parts connected to it must not be used as an earthing point for electric-welding operations.

The pad bearing compartment can be optionally fitted with an earth cable that must be connected to the output flange. Connect the earth cable to the threaded holes on the side of the output flange. When the welding work is complete, detach the earth cable from the output flange.

If no threaded holes are available on the gear unit for an earth connection, please take suitable alternative measures. This work must always be done by specialist electricians.

When electric welding is carried out anywhere on the mill, the welding current must not be conducted through the gear unit. For this reason, the welding current return cable must always be directly connected to the component to be welded.

8.3.9 General inspection of the gear unit

Arrange for Flender Customer Services to inspect the gear unit. Thanks to their experience, these engineers are best placed to assess which gear unit components need to be replaced.

8.3.10 Check that all of the fastening bolts are tight

Note the following points when checking that the fastening bolts are tight:

- Observe the data regarding connection classes (Page 55), preload forces and tightening torques (Page 55).
- Tighten the foot fastening bolts with the prescribed preload force or to the required torque. The relevant information can be found in the dimension drawing in the complete documentation for the gear unit.
- Note the separate operating instructions if you are using clamping nuts.
- Replace any bolts that are no longer fit for use by bolts of the same strength class and type.

8.3.11 Final work

After you have finished all the work listed in the maintenance schedule, replace any bolts that are no longer fit for use by bolts of the same strength class and type.

8.4 Possible faults

The faults listed below are only intended as a troubleshooting guide.

If any faults occur while the unit is still under warranty, do not allow anyone except Flender Customer Services to attempt a repair.

Even after the warranty period has expired, you should still arrange for faults to be rectified by Flender Customer Services.

Note

Loss of warranty

You will invalidate the warranty for the gear unit if you modify it in any way without seeking the approval of Flender beforehand, or if you do not use original spare parts.

Only use original spare parts from Flender. Always arrange for Flender Customer Services to repair any faults that develop while the unit is still under warranty.

Possible faults and their rectification

The following table provides you with an overview of possible faults and indicates how they can be rectified.

Table 8-2 Possible faults and their rectification

Possible faults	Causes	Possible remedies
Pressure switch triggers alarm	Oil pressure has dropped below minimum value	• Check the oil level at room temperature • Top up with oil if necessary • Check the operating temperature • Check the oil pump • If required, replace the oil pump • Check the oil filter • Clean or replace the oil filter if necessary • Inspect the pressure switch and replace if necessary • Check the pipes, and replace or seal if necessary • Check the flow
Noise	Damage to the gear teeth	• Contact Customer Services • Inspect the toothed components • If necessary, replace damaged components
	The bearing play is excessive or reduced	• Contact Customer Services • Adjust bearing play
	Defective plain or rolling-contact bearings	• Contact Customer Services • Replace the defective plain or rolling-contact bearings
	Gear unit fastening has worked loose	• Tighten bolts and nuts to the specified tightening torque • Replace damaged bolts and nuts
Leakage	Labyrinth seals soiled with oil, incorrect transport position	• Check oil filling • Clean the labyrinths
	Inadequate sealing of the housing cover or joints	• Check the seals and replace if necessary • Seal housing cover or joints
	Oil level in the gear unit housing too high	• Check the oil level • Correct the oil level if necessary
	Leaks in the input shaft	• Check the oil level • Correct the oil level if necessary
Wet-air filter is severely discoloured	Wet-air filter is spent	• Replace the wet-air filter
Wet-air filter is becoming discoloured from the top downwards	Water in the oil	• Take test tube sample to examine oil condition for water penetration • Have the oil examined by a chemical lab • Change the oil if necessary

Possible faults	Causes	Possible remedies
Oil is foaming in the gear unit	Preservation agent not completely drained off	• Change the oil
	Oil supply system left in operation for too long at low temperatures	• Switch off the oil supply system • Degas the oil
	Gear unit too cold in operation	• Switch off the gear unit • Degas the oil • Start up without cooling water during cold restart
	Water in the oil	• Take test tube sample to examine oil condition for water penetration • Have the oil examined by a chemical lab • Change the oil if necessary
	Oil defoamer has run out	• Examine the oil • Change the oil if necessary
	Unsuitable mixture of oils	• Examine the oil • Change the oil if necessary
	The fast-running bevel gear swirls up the oil	• Check the oil level • Correct the oil level if necessary
Oil escaping from the gear unit	Inadequate sealing of the housing cover or joints	• Check the seals and replace if necessary • Seal housing cover or joints • Check the compression seals and retighten screws if necessary
	Leaking pipes	• Check the pipes, and replace or seal if necessary
Oil supply system malfunction	-	• Follow the operating instructions for the oil supply system

Possible faults	Causes	Possible remedies
Elevated temperature during operation	Oil level in the gear unit housing too low or too high	• Check the oil level • Correct the oil level if necessary
	Oil is too old	• Find out when the last oil change was done • Change the oil if necessary
	Oil is severely contaminated	• Change the oil
	Oil supply system defective	• Inspect the oil supply system • Replace defective components if necessary • Follow the operating instructions for the oil supply system
	Gear unit with water-oil cooler: Coolant flow too low or too high	• Adjust the valves at the supply and return lines • Check the water-oil cooler for free flow
	Gear unit with air-oil cooler: Inadequate air flow	• Clean the air-oil cooler
	Gear unit with air-oil cooler: Cooler block soiled	• Clean the cooler block
	Gear unit with oil cooling system: Inadequate oil flow through the oil cooler	• Check the oil filter • Clean or replace the oil filter if necessary
	Coolant temperature is too high	• Check the temperature; correct if necessary
	Defective oil pump	• Check the oil pump function • If required, repair or replace the oil pump
	Electrical equipment defective	• Check the electrical equipment and replace if necessary
Elevated temperature at temperature sensor in pad bearing	Oil filter contaminated	• Check the oil filter • Clean or replace the oil filter if necessary
	Quantity of oil supplied to the pad bearing too small	• Check the setting of the control valves
	Monitoring devices defective	• Check the monitoring devices and replace if necessary
	Changed grinding parameters at mill	• Examine and check the grinding parameters
	Electrical equipment defective	• Check the electrical equipment and replace if necessary
Elevated temperature at bearing points	Oil level in the gear unit housing too low or too high	• Check the oil level at room temperature • Correct the oil level if necessary
	Oil is too old	• Find out when the last oil change was done • Change the oil if necessary
	Oil supply system defective	• Inspect the oil supply system • Replace defective components if necessary • Follow the operating instructions for the oil supply system
	Defective plain or rolling-contact bearings	• Contact Customer Services • Check the plain or rolling-contact bearings and replace if necessary
	Defective oil pump	• Check the oil pump function • If required, repair or replace the oil pump
	Electrical equipment defective	• Check the electrical equipment and replace if necessary

Possible faults	Causes	Possible remedies
Increased vibration amplitude at the bearing points	Defective plain or rolling-contact bearings	• Contact Customer Services • Check the plain or rolling-contact bearings and replace if necessary
	Gear wheels defective	• Contact Customer Services • Inspect the gear wheels and replace if necessary
Contamination indicator of the double change-over filter triggers an alarm	Double change-over filter clogged	• Change over the double change-over filter corresponding to the separate operating instructions • Clean the filter element
Volume flowmeter triggers alarm	Oil too cold	• Warm the oil
	Oil filter contaminated	• Check the oil filter • Clean or replace the oil filter if necessary
	Leaking pipes	• Check the pipes, and replace or seal if necessary
	Volume flowmeter defective	• Inspect the volume flowmeter and replace if necessary
Water in the oil	Oil supply system defective	• Inspect the oil supply system • Replace defective components if necessary • Follow the operating instructions for the oil supply system
	Cooler leaking	• Inspect the cooler and replace if necessary
	Engine room fan is blowing cold air onto gear unit: Water condenses	• Install suitable thermal insulation to protect gear unit housing • Close the air outlet or change the direction of the air outlet using structural measures.
	Climatic conditions	• Contact Customer Services • Use wet-air filter if necessary
	Oil foams in the oil sump	• Take test tube sample to examine oil condition for water penetration • Have the oil examined by a chemical lab

Service & Support

9

Contact

When ordering spare parts, requesting a customer service technician or in the case of technical queries, please contact our factory or one of our customer service addresses:

Siemens Ltd.

309/2, 'A' Block 100, Chettipedu Village

Thandalam Post

602105 Chennai

India

Tel.: +91 (44) 37174000

Further information

Further information about service and support can be found on the Internet.

Service & Support (https://www.flender.com/service)

Disposal

10

Disposal of the gear unit

When disposing of the gear unit after its useful life, please observe the following measures:

- Remove operating oil, preservative agents and coolant from the gear unit and dispose of it according to regulations.
- Dispose of the gear unit parts according to applicable national regulations or recycle them.

Environmental protection

Observe the following environmental protection measures for disposal:

- Dispose of or recycle packaging material according to applicable national regulations.
- When changing the oil, collect the used oil in suitable containers. Use oil-binding agents to clean up any oil spillages immediately.
- Store preservative agents separately from used oil.
- Dispose of used oil, preservative agents, oil binding agents and oil-soaked cloths according to the applicable environmental protection regulations.

Spare parts

11

By stocking the most important spare parts at the installation site you can ensure that the gear unit is ready for use at any time.

Note

Damage to the gear unit due to use of unsuitable spare parts

Only use original spare parts from Flender. Flender shall not accept any warranty claims for spare parts that are not supplied by Flender.

Other spare parts are not tested and approved by Flender. Non-approved spare parts may possibly change the design characteristics of the gear unit and thus impair its active or passive safety.

Flender will accept no liability or warranty whatsoever for damage occurring as a result of the use of non-approved spare parts. The same applies to any accessories that are not supplied from Flender.

The contact address of Flender Customer Services can be found under Service & Support (Page 81).

Information required when ordering spare parts

To order spare parts, refer to the spare-parts list. Only use original Flender spare parts.

When ordering spare parts, please provide the following information:

- Order number with item
- Type and size
- Part number
- Quantity

Technical data

A

A.1 General technical data

Rating plate

The gear unit rating plate contains the most important technical data.

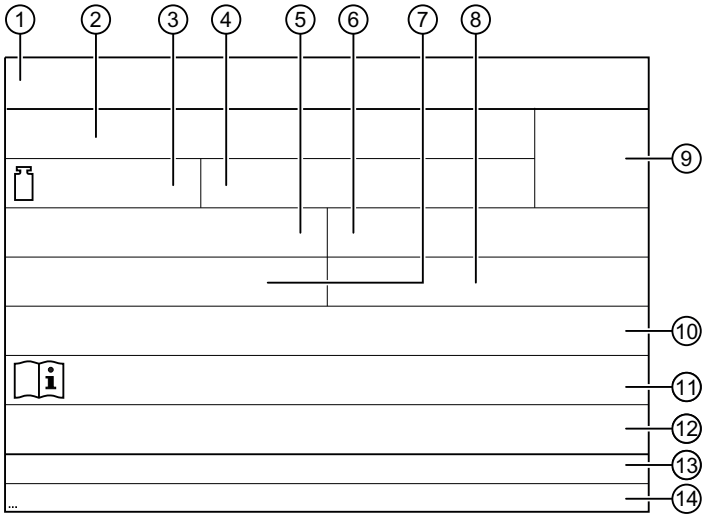

① Company logo
② Serial no.: Plant code / order no. - Item - Serial no. / Year of manufacture
③ Total weight in kg
④ For special information
⑤ Type, size
⑥ Power rating P_2 in kW or torque T_2 in Nm
⑦ Speed n_1
⑧ Speed n_2
⑨ Optional DMC (Data Matrix Code)
⑩ Oil data: Oil type, oil viscosity, oil quantity
⑪ Numbers of operating instructions
⑫ For special information
⑬ Manufacturer documentation / Country of origin
⑭ Hotline

Figure A-1 Rating plate

The limits of the intended use of the gear unit are defined on the basis of these data and the contractual agreements concerning the gear unit concluded between Flender and the customer.

More information

More information about these technical data can be found in the separate data sheet and the dimension drawings in the complete documentation for the gear unit.

More information about all major accessories including their technical data and control instructions can be found in the order-specific list of equipment in the complete documentation for the gear unit.

Example code

The following is an example of the code printed in line 5 of the rating plate and explains the meaning of the individual letters and numbers.

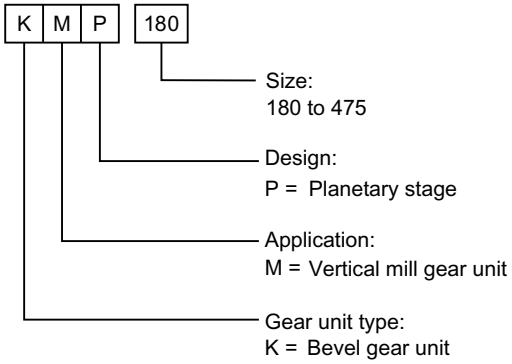

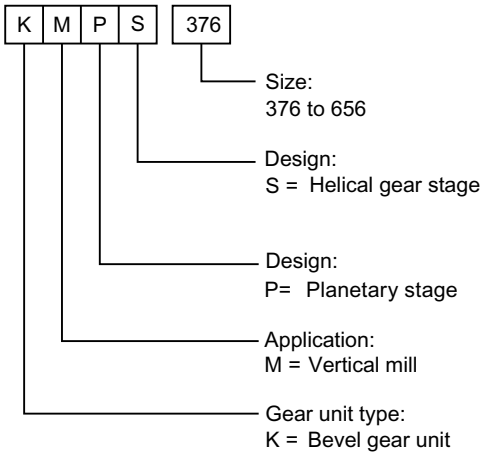

More information

More information on the weights and the enveloping surface sound pressure levels can be found in chapters Weights (Page 89) and Enveloping surface sound pressure level (Page 89).

More information about these technical data can be found in the separate data sheet and the dimension drawings in the complete documentation for the gear unit.

A.2 Ambient temperature

Unless otherwise contractually agreed, the gear unit must not be exposed to any harmful atmospheres or substances such as aggressive chemical products. By applying various suitable measures, the gear unit can be used in the ambient temperature range extending from -40 °C up to 60 °C. However, this must always be authorised by Flender and specified in the order text.

A.3 Weights

The precise weights are specified in the drawings in the complete documentation or on the rating plate.

All weight specifications refer to units without oil filling or mounted components.

A.4 Enveloping surface sound pressure level

It is not possible to specify an enveloping surface sound pressure level for a gear unit in operation because the unit is operated under no load on the Flender test stand during the trial run.

Index

A

Air filter, 74
Air filter element, 74
Attachment points, 39

C

Checking procedure, 60
Coloured markings, 12
Contact, 81
Contamination limits, 71
Cooling, 21
Copyright, 10
Coupling, 24, 45
Customer Services, 81

D

Danger of explosion, 16
Delivered state, 21
Direction of rotation, 19
Disclaimer, 9
Disposal, 83
Documentation landscape, 9
Double change-over filter
  Cleaning, 75

E

Environmental protection, 83
Equipment features, 19

F

Fastening bolts
  Bolt connection class, 55
  Bolts, 54
  Checking for tightness, 76
  Mating threads, 55
  Preload force, 55
  Tightening procedure, 55
  Tightening torque, 55
Fault, 76
Fault rectification, 77
Filling with oil, 31
Final work, 57

G

Gear unit equipment, 20
Gear unit housing, 19
Gear unit markings, 12
General inspection of the gear unit, 75

H

Heating
  Commissioning, 63
  Function, 24
  Heating elements, 24
  Temperature monitor, 25

I

Initial test run, 62
Interval, 69
Irregularities in operation, 65

L

Labyrinth seal, 23
Lubricant, 10

M

Maintenance activities, 69
Maintenance information, 69
Maintenance schedule, 69
Measures
  Checking procedure, 60
  during commissioning, 62
  Prior to commissioning, 59
Mounted components
  Mounting, 51
Mounting position, 39

N

Note about assembly, 39

O

Oil, 10
  Contamination limits, 71
Oil drain, 32
Oil level indicator, 25
Oil supply, 21
Oil supply system
  Commissioning, 60
Oil temperature
  Checking, 72
Oil temperature monitoring, 26
Operating data
  Compliance with, 65
  Oil, 65
Ordering spare parts, 81, 85

P

Packing list, 27
Preservation, 33
Protective equipment, 14

R

Rating plate, 87
  Example of type and size, 88
Reactivating, 18
Resistance thermometer, 26
Rinsing, 60
Rotary shaft sealing ring, 21
Round cord hollow profile, 21

S

Safety rules, 11
Scope of delivery, 27
Sealing cap, 35
Servicing, 71
Servicing activities, 69
Shaft seal, 23

T

Taking oil samples, 33
Taking the unit out of service, 66
Technical data, 87
Transport information, 27
Transport symbols, 28
Troubleshooting, 76
Types of danger, 14

U

Unpacking, 40
Used oil, 83
Using the gear unit, 17

W

Warning symbols, 13

FLENDER GEAR UNITS

Vertical-mill gear unit
Assembly and operating instructions 9180en
Edition 06/2020

Flender GmbH
Alfred-Flender-Straße 77
46395 Bocholt
GERMANY

FLENDER